CEILING FAN

Installation instructions

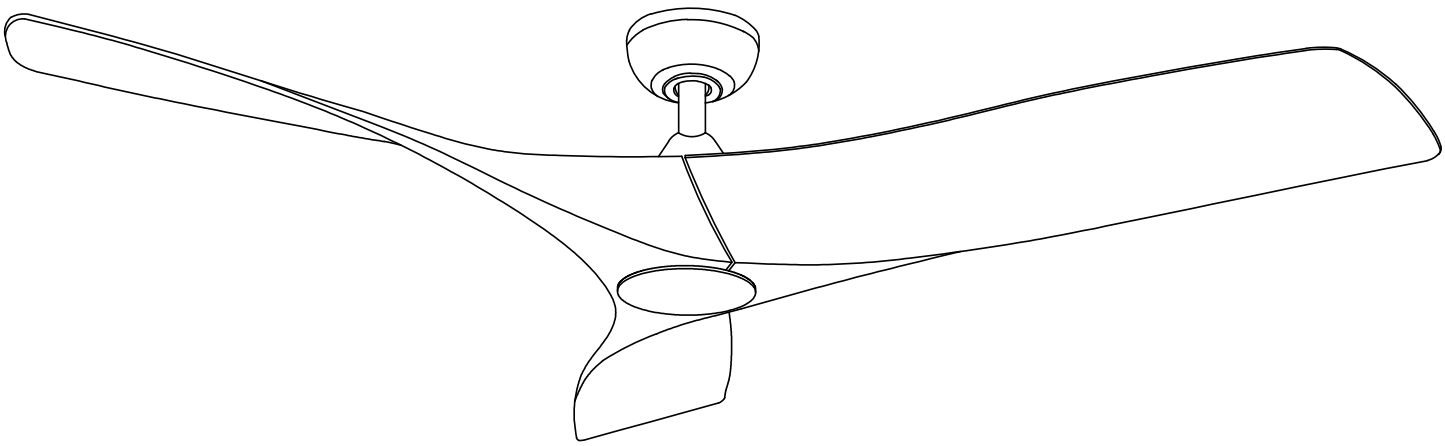

TABLE OF CONTENTS

Preparation 2
Packing list 3
Safety rules 4
Ready to install 5
Initial installation 6
Circuit connection 8
Install the host 9
Fan blade mounting 9
Install LED mounting panel 10
Install lampshade 11
Balance correction 11
A remote control 12
Troubleshooting 13

PREPARATION

Before beginning the assembly of this product, read Safety Information on page 4 and ensure all parts are present. Compare all parts with the package contents list and hardware contents list. If any part is missing or damaged, do not attempt to assemble the product.

Estimated Assembly Time: 120 minutes

Tools Required for Assembly (not included): Electrical Tape, Phillips Screwdriver, Pliers, Safety Glasses, Step Ladder, and Wire Strippers

Helpful Tools (not included): AC Tester Light, Tape Measure, Wiring Handbook and Wire Cutters

- Philips screw driver
- Blade screw driver
- 11 mm wrench
- Step ladder
- Wire cutters

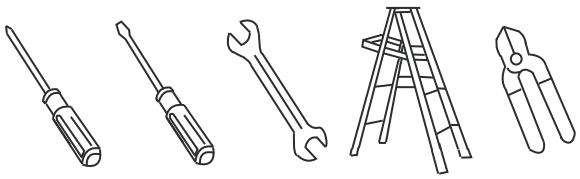

PACKAGE CONTENTS

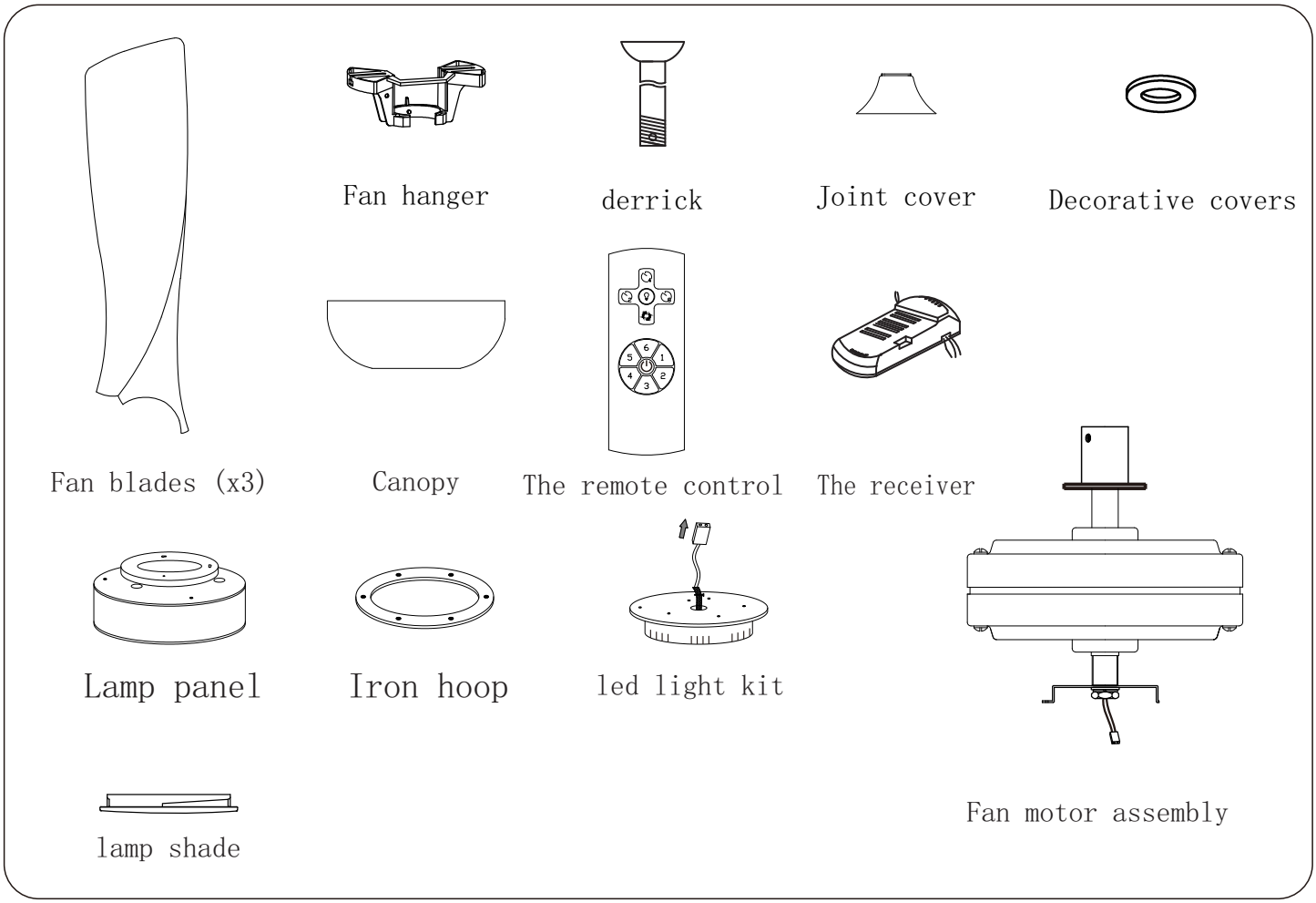

ACCESSORIES PACKAGE

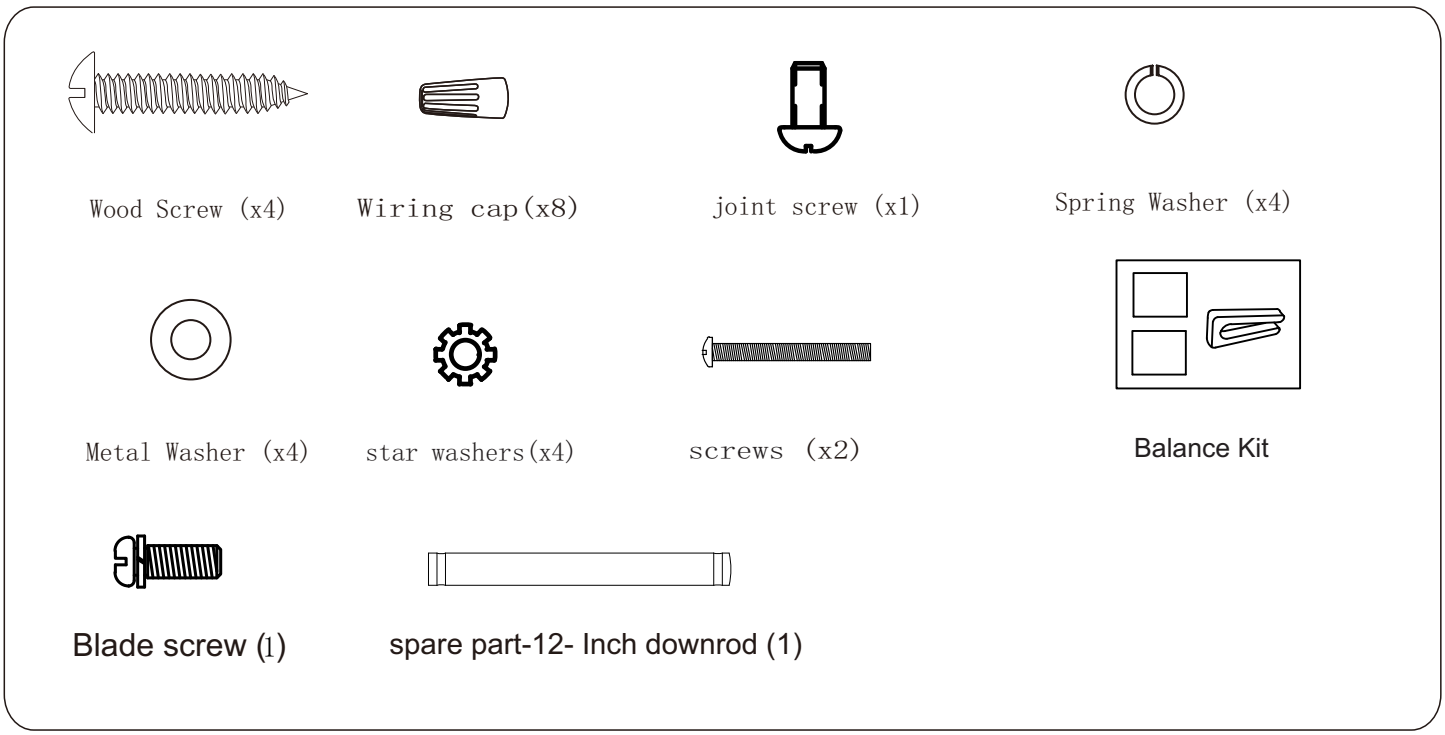

SAFETY RULES

1. To reduce the risk of electric shock, insure electricity has been turned off at the circuit breaker or fuse box before beginning.

2. All wiring must be in accordance with the National Electrical Code and local electrical codes. Electrical installation should be performed by a qualified licensed electrician.

3. **WARNING:** Suitable for use with solid-state speed controls.

4. **WARNING:** To reduce the risk of personal injury, use only the two steel screws (and lock washers) provided with the outlet box for mounting to the outlet box. Most outlet boxes commonly used for the support of lighting fixtures are not acceptable for fan support and may need to be replaced, consult a qualified electrician if in doubt.

WARNING
TO REDUCE THE RISK OF FIRE, ELECTRIC SHOCK OR PERSONAL INJURY, MOUNT FAN TO OUTLET BOX MARKED "ACCEPTABLE FOR FAN SUPPORT".

5. The outlet box and support structure must be securely mounted and capable of reliably supporting a minimum of 50 pounds. Use only CUL Listed outlet boxes marked "FOR FAN SUPPORT".

6. The fan must be mounted with a minimum of 7 feet clearance from the trailing edge of the blades to the floor.

7. Do not operate reversing switch while fan blades are in motion. Fan must be turned off and blades stopped before reversing blade direction.

8. Avoid placing objects in the path of the blades.

9. To avoid personal injury or damage to the fan and other items, be cautious when working around or cleaning the fan.

10. Do not use water or detergents when cleaning the fan or fan blades. A dry dust cloth or lightly dampened cloth will be suitable for most cleaning.

11. After marking electrical connections, spliced conductors should be turned upward and pushed carefully up into outlet box. The wires should be spread apart with the grounded conductor and the equipment-grounding conductor on one side of the outlet box.

12. Electrical diagrams are reference only. Light kits that are not packed with the fan must be CUL Listed and marked suitable for use with the model fan you are installing. Switches must be CUL General Use Switches. Refer to the Instructions packaged with the light kits and switches for proper assembly.

WARNING
TO REDUCE THE RISK OF PERSONAL INJURY, DO NOT BEND THE BLADE BRACKETS (ALSO REFERRED TO AS FLANGES) DURING ASSEMBLY OR AFTER INSTALLATION. DO NOT INSERT OBJECTS IN THE PATH OF THE BLADES.

PREPARATION

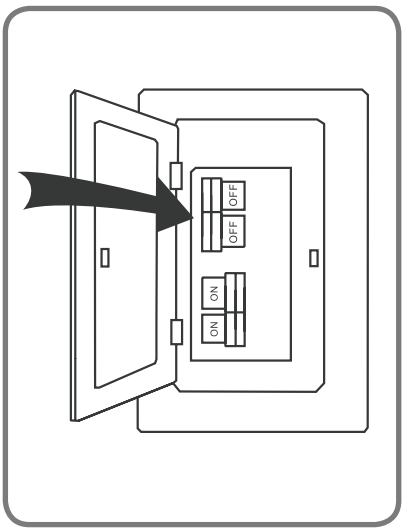

1. Turn power off.

Turn off the main circuit power switch and wall fan switch.

Failure to disconnect the power supply prior to installation may result in serious injury or death.

See pages 20-21 for complete description of cautions and warnings.

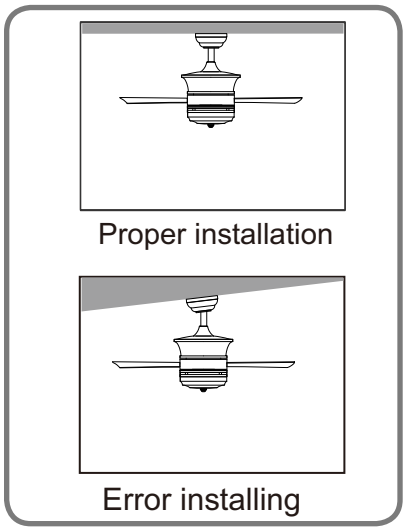

2. Choose mounting option.

Proper installation:

The ceiling fan must be mounted vertically on a sturdy ceiling, and the fan must be mounted in a position to withstand gravity greater than 30 kilograms.

If mounted on a slanted ceiling, the opening of the hanger must be tilted upward and the slot should be stuck inside the ear.

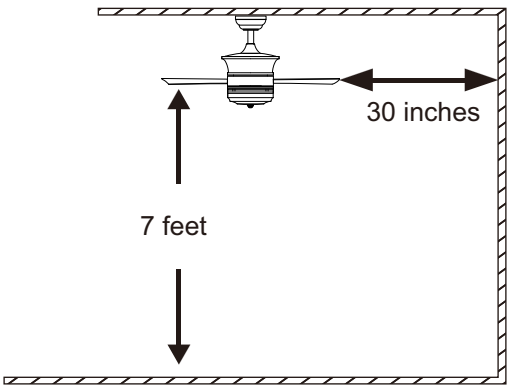

3. Choose suitable location.

Ensure the blades will be at least 30 in. from any obstructions. Also check the downrod length to ensure the blades will be at least 7 ft. above the floor.

INITIAL INSTALLATION

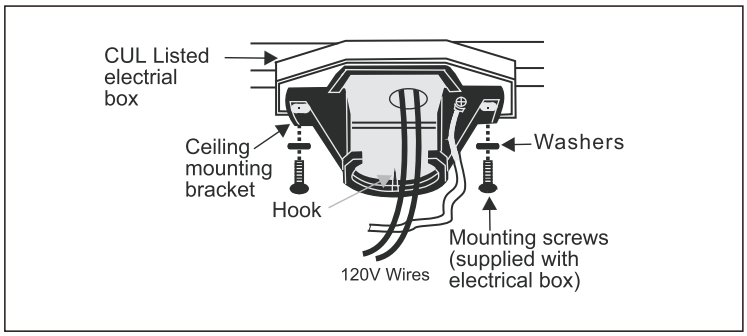

Install fan hanger

Loosen the 4 screws on the hanging plate and fix the hanging plate on the ceiling with wood screws. Pay attention to the power cord through the center hole of the tray to facilitate wiring.

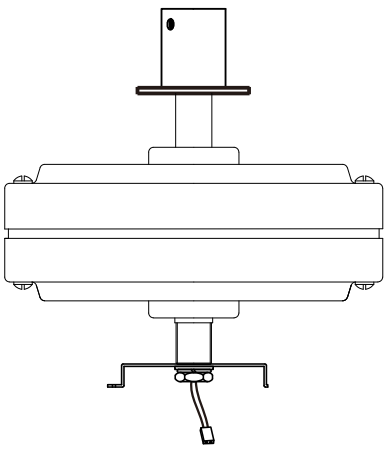

Ceiling fan motor assembly

Take out the ceiling fan and check if the motor body is complete. If any part is missing or damaged, it is recommended to stop the installation.

DOWNROD OR ANGLE MOUNTING

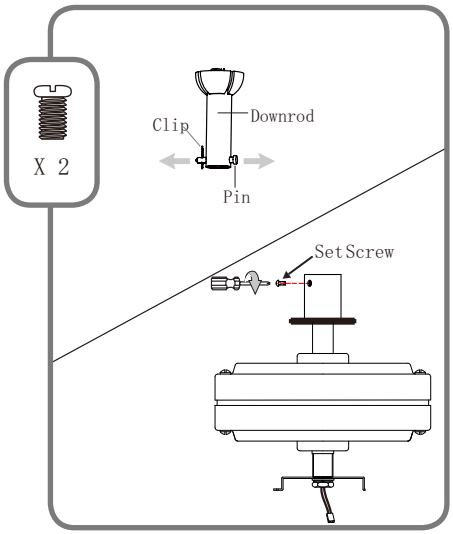

1. Loosen set screws and remove the pin and clip from the downrod.

Remove the clip and pin from the downrod. Then partially loosen the two set screws in the yoke at the top of the motor assembly.

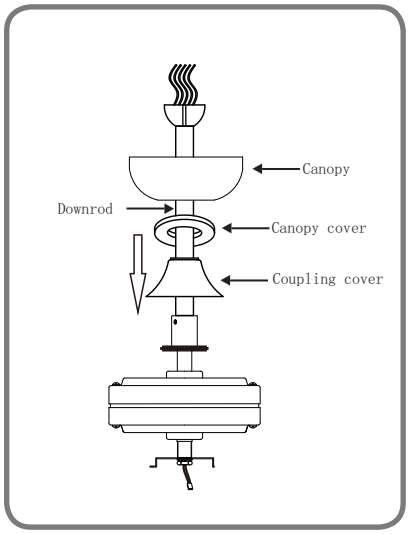

2. Feed the wires through the canopy and downrod.

Insert the downrod through the canopy. Then, feed the fan wires through the downrod.

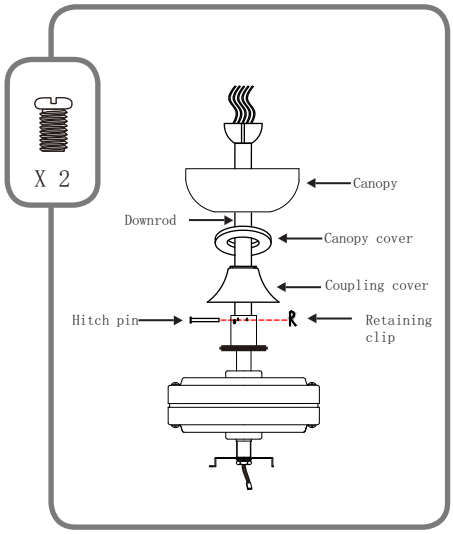

3. Install the downrod into yoke.

Slide the downrod into the yoke at the top of the motor assembly. Align the holes, and reinstall the pin and clip. Then tighten both set screws.

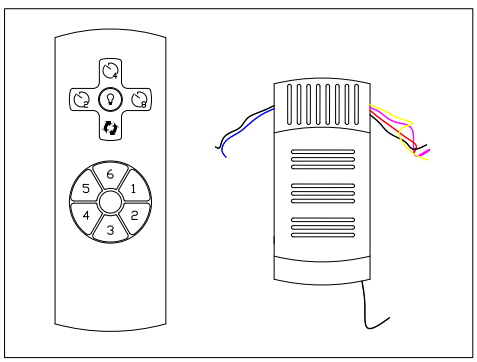

Remove the ceiling fan receiver from the remote control set and prepare to connect to the main unit. Please see the picture below for details:

CIRCUIT CONNECTION

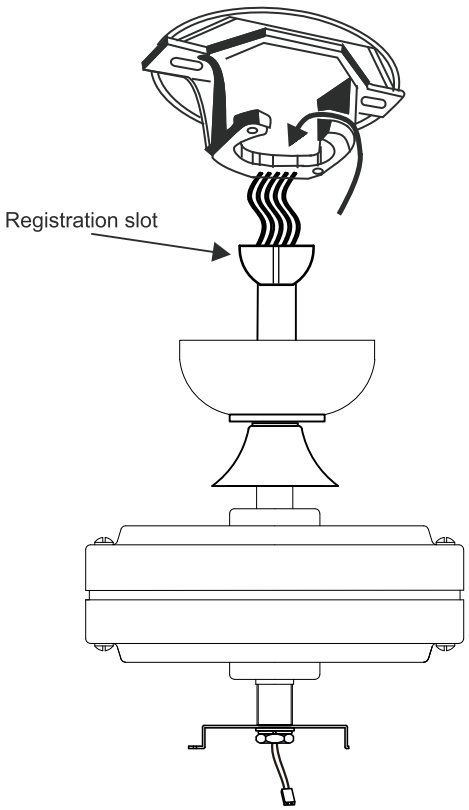

Attach the installed main body to the hanger through the derrick to facilitate the wiring in the next step.

Route wires exiting from the top of the fan motor through the canopy and then through the ball/downrod.

Align the holes at the bottom of the downrod with the holes in the collar on top of the motor housing. Carefully insert the hitch pin through the holes in the collar and downrod. Be careful not to jam the pin against the wiring inside the downrod. Insert the locking pin through the hole near the end of the hitch pin until it snaps into its locked position, as noted in the circle inset of the picture on the right.

Tighten two set screws on top of the fan motor firmly.

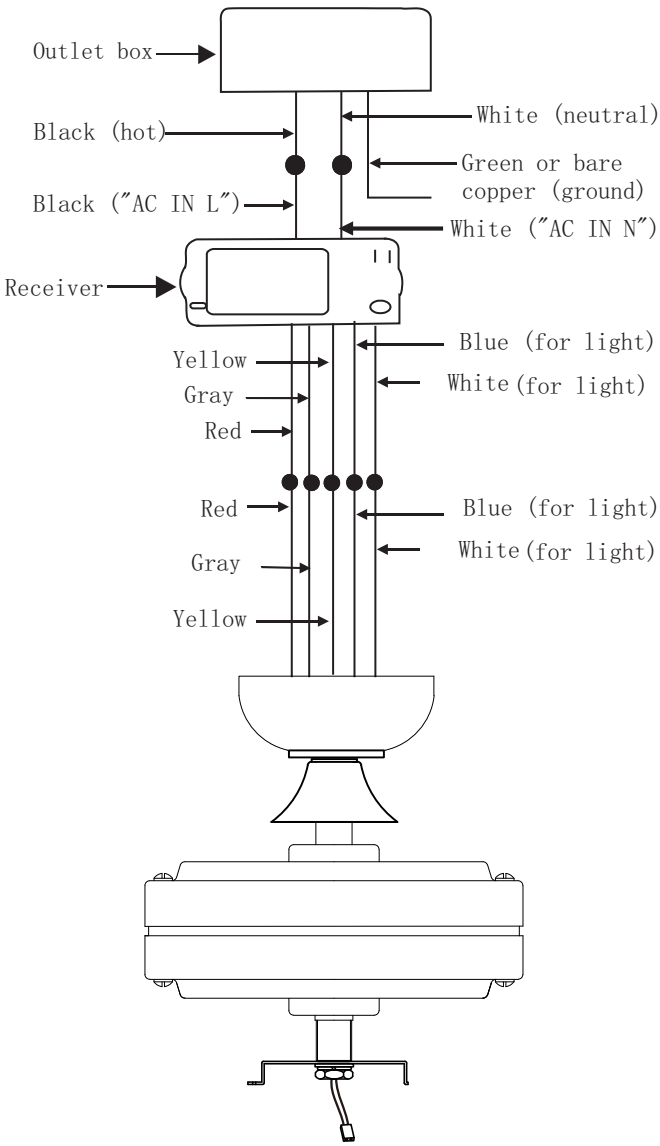

Wiring diagram

INSTALL THE HOST

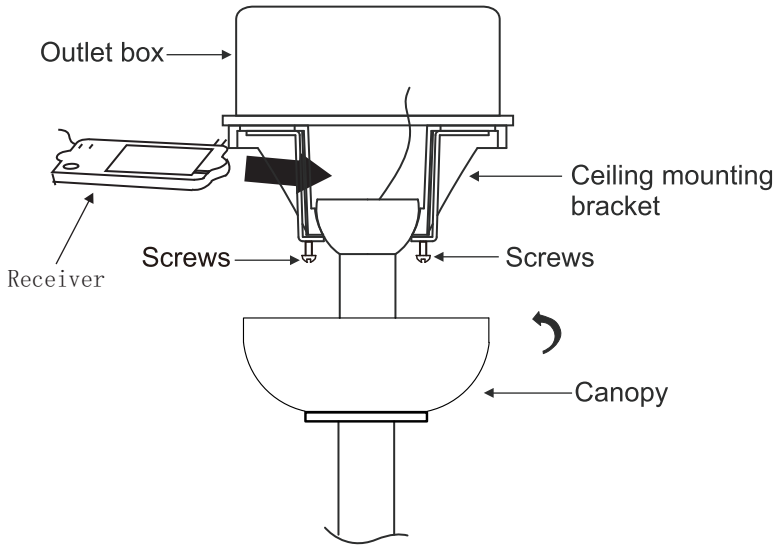

Arrange the receiver wiring to connect the wire, then put it all in the hanger, then tighten the two screw holes on the clock to the two screws on the hanger, and tighten the screws with a screwdriver.

FAN BLADE MOUNTING

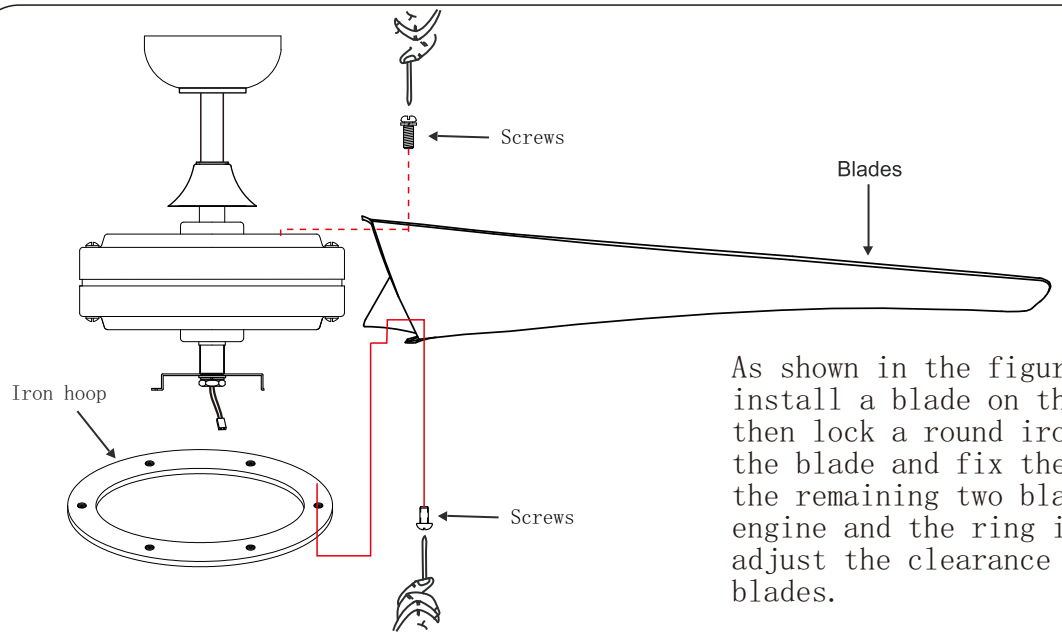

As shown in the figure, first install a blade on the main machine, then lock a round iron ring inside the blade and fix the screws. Fix the remaining two blades on the main engine and the ring in turn, and adjust the clearance between the blades.

INSTALL LED MOUNTING PANEL

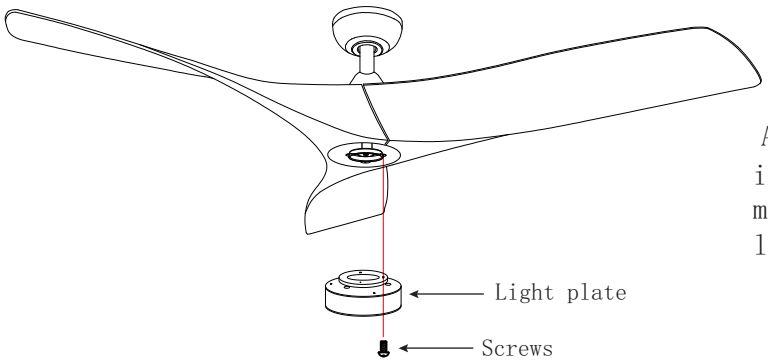

As shown in the picture on the left, install the LED fixed disk on the main machine and pay attention to the lamp line through the middle.

LED LIGHT KIT INSTALLATION

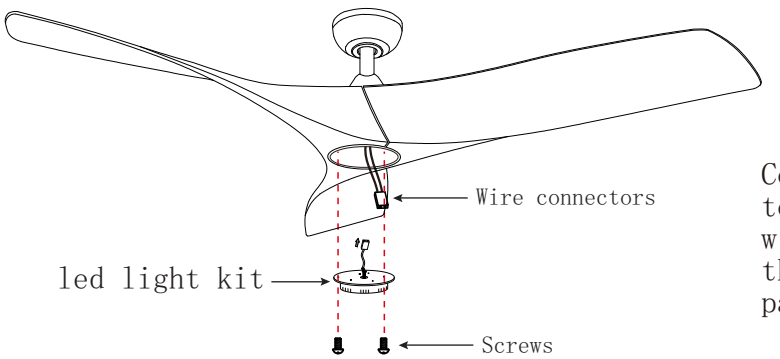

Connect the light source set to the host conductor via the wire connector as shown, and then screw it to the lamp panel.

INSTALL LAMPSHADE

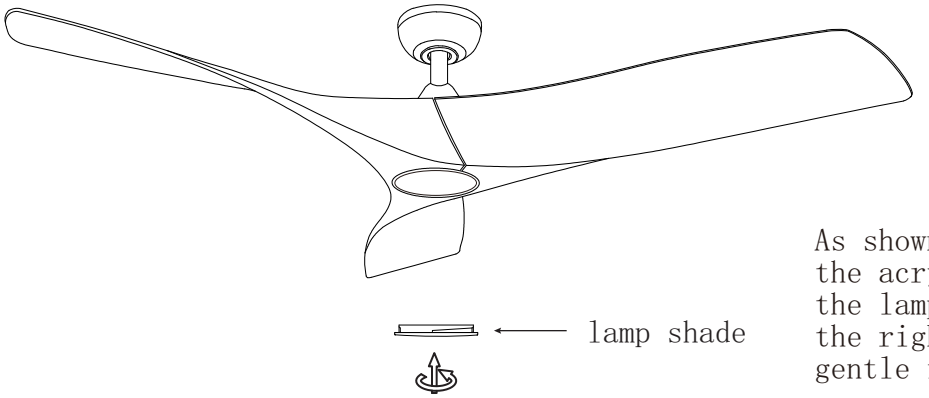

As shown in the figure, put the acrylic lamp shade into the lamp pan and turn it to the right and fix it with gentle force.

BALANCE CORRECTION

If the fan suspension is shaken, please first confirm the fixing of the suction head screw and whether the fan blade screw is locked. If one of the above parts is not locked, please lock and retest. If it still wobbles, please adjust it as follows:

1. Remove the balance clip from the balance pack, select a fan blade and clip it to the edge of the fan blade tail.
2. Turn on the switch to see if the swing of the ceiling fan has been weakened. If so, try another fan blade for improvement.
3. Clamp the balance clamp to the weakest blade, move inward or outward on the edge of the blade, start the ceiling fan to adjust repeatedly and find the best position of the balance clamp.
4. Tear off the double-sided tape of the balance block and paste it on the center line above the fan blade near the balance clip.

OPERATION FOR REMOTE

Install the remote control holder onto any wall or suitable flat surface using the two steel screws. Upon first use, connect the remote control to its receiver in the fan by pressing the emitter's "⏻" button for 3-10 seconds. There should be a beep to announce that the remote has successfully connected to its receiver.

1, 2, 3, 4, 5, 6: Starts the fan at one speed

: ON/OFF the lamp

: Turns off the fan

: Runs the fan for 2/4/8 hours and then turns it off

: Reverses the fan's direction "Forward and Reverse"

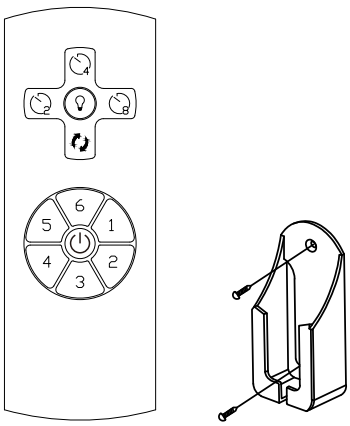

DO NOT press the F/R button while the fan is in operation. Wait for the blades to fully stop their movement before reversing their direction.

This remote operates with a range of 30 feet (10 m). It uses 12V 23A batteries (not included). If the remote will not be used for a prolonged period, it is recommended to remove the batteries for better service life.

TROUBLESHOOTING

Problem	Solution
Fan will not start.	1. Check circuit fuses or breakers 2. Check all electrical connections to insure proper contact. **CAUTION:** Make sure the main power is OFF when checking any electrical connection.
Fan sounds noisy.	1. Make sure all motor housing screws are snug. 2. Make sure the screws that attach the fan blade brackets to the motor are tight. 3. Make sure wire nut connections are not rubbing against each other or the interior wall of the switch housing. **CAUTION:** Make sure main power is off. 4. Allow a 24-hour "breaking-in" period. Most noise associated with a new fan disappear during this time. 5. If using an optional light kit, make sure the screws securing the glassware are tight. Check that the light bulb is also secure. 6. Some fan motors are sensitive to signals from solid-state variable speed controls. If you have installed this type of control, choose and install another type of control. 7. Make sure the upper canopy is a short distance from the ceiling. It should not touch the ceiling.
Fan wobble.	1. Check that all blade and blade arm screws are secure. 2. Most fan wobbling problems are caused when blade levels are unequal. Check this level by selecting a point on the ceiling above the tip of one of the blades. Measure this distance. Rotate the fan until the next blade is positioned for measurement. Repeat for each blade. The distance deviation should be equal within 1/8". 3. Use the enclosed Blade Balancing Kit if the blade wobble is still noticeable. 4. If the blade wobble is still noticeable, interchanging two adjacent (side by side) blades can redistribute the weight and possibly result in smoother operation. **WARNING:** TO REDUCE THE RISK OF PERSONAL INJURY, DO NOT BEND THE BLADE ARM WHILE INSTALLING, BALANCING THE BLADES, OR CLEANING THE FAN. DO NOT INSERT FOREIGN OBJECTS BETWEEN ROTATING FAN BLADES.