Assembly Instruction

Double Reclining Loveseat With
Center Console & Cup Holders

Note: Do not use power tools for assembly. Power tools increase the risk of over tightening which lead to splitting or cracking the wood.

COMPONENT LIST

No	Drawing	Description	Qty
A	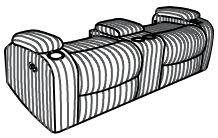	SEAT	1 PC
B		LSF BACK REST	1 PC
C	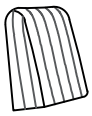	CONSOLE BACK REST	1 PC
D		RSF BACK REST	1 PC
E	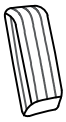	LSF EAR	1 PC
F	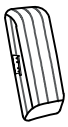	RSF EAR	1 PC
G	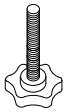	STAR KNOB	2 PCS

Step #1

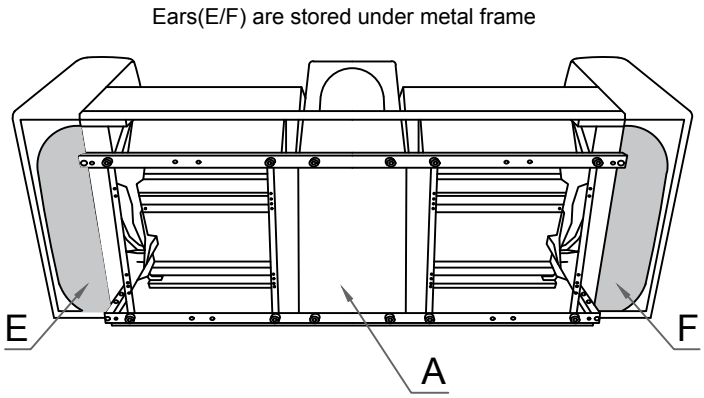
Ears(E/F) are stored under metal frame
E
A
F

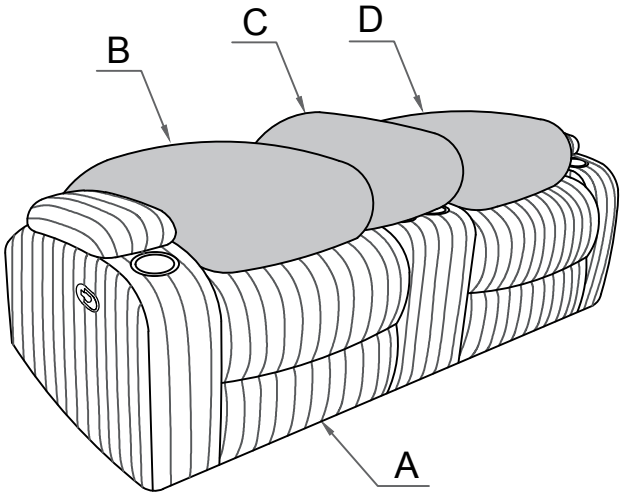
B
C
D
A

Step #2

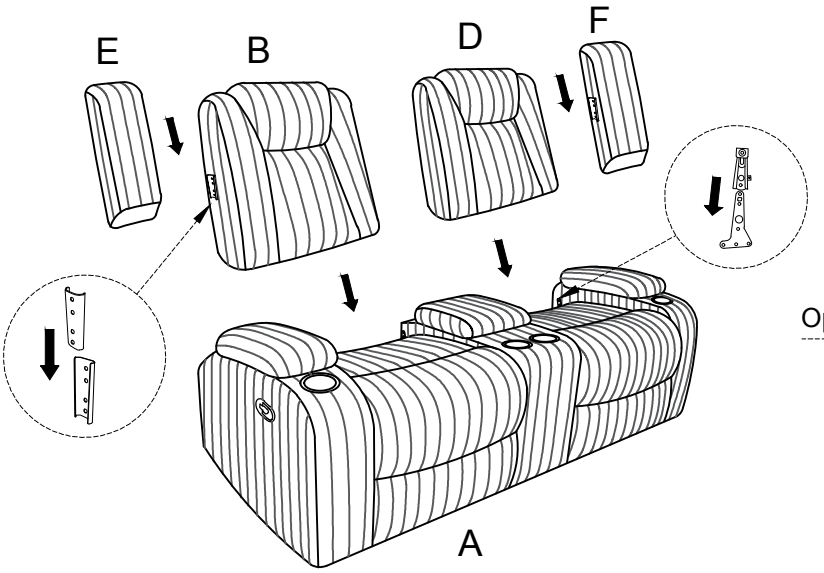
E
B
D
F
A

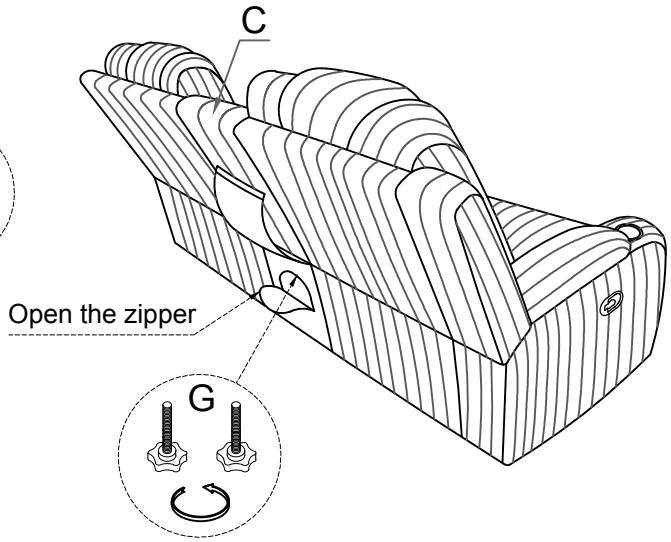
C
Open the zipper
G

Step #3

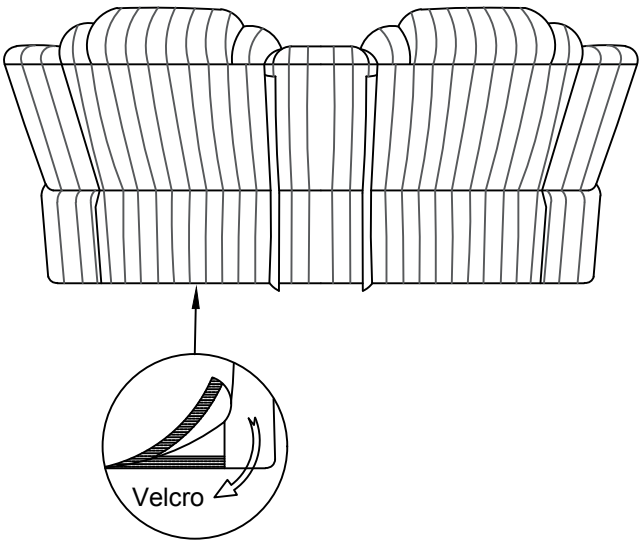

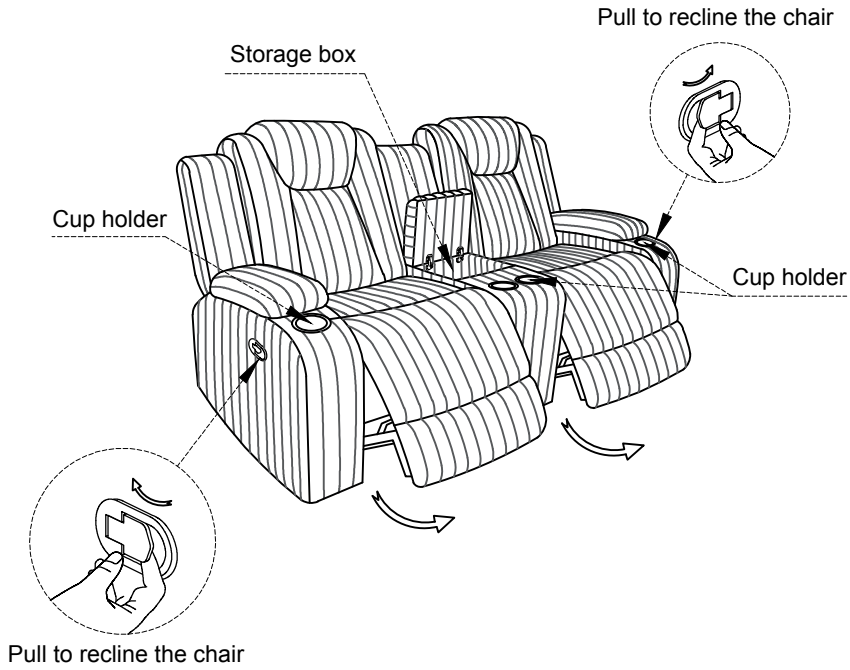

COMPLETED

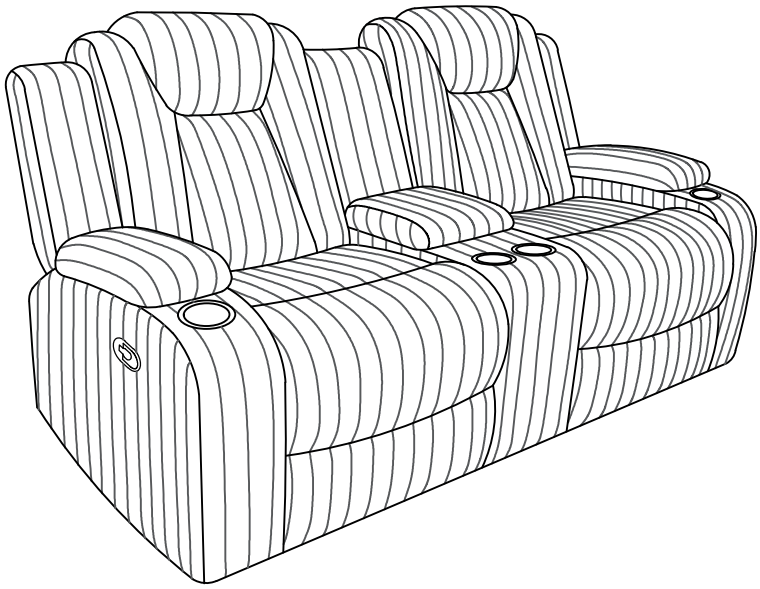

Care Instruction for Corduroy Furniture:

In order to maintain the original appearance of your Corduroy Furniture,
please follow below simple care procedures:

• Avoid exposing furniture directly to sunlight or heating and air conditioning outlets. Sunlight and/or exposure to heating and air conditioning outlets will fade/damage Corduroy.

• Vacuum or wipe with a soft cloth to remove dust.

• Hardware may loosen over time. Periodically check to make sure all connections are tight, Re-tighten if necessary.

For items use on wooden floor, hard surfaces or carpets, it is recommended to Install protective pads under all legs and supports to avoid/prevent from damages/scratches and discoloration.

Assembly Instruction

Double Reclining Sofa with Cup Holders

Note: Do not use power tools for assembly. Power tools increase the risk of over tightening which lead to splitting or cracking the wood.

COMPONENT LIST

No	Drawing	Description	Qty
A	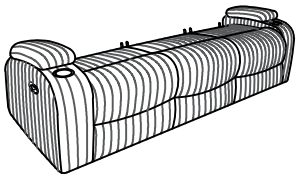	SEAT	1 PC
B		LSF BACK REST	1 PC
C	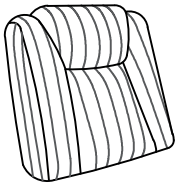	MIDDLE BACK REST	1 PC
D	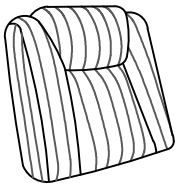	RSF BACK REST	1 PC
E	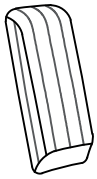	LSF EAR	1 PC
F	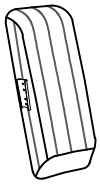	RSF EAR	1 PC

Step #1

Ears(E/F) are stored under metal frame

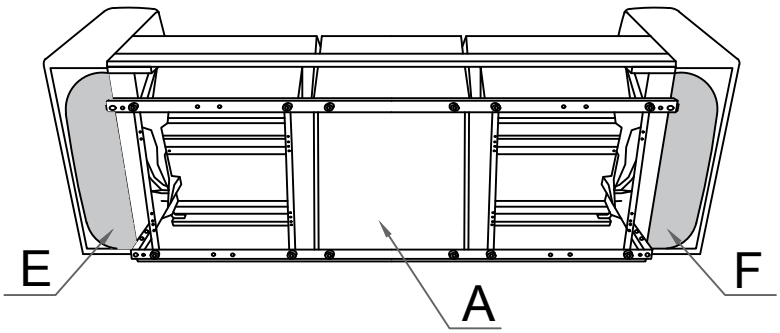

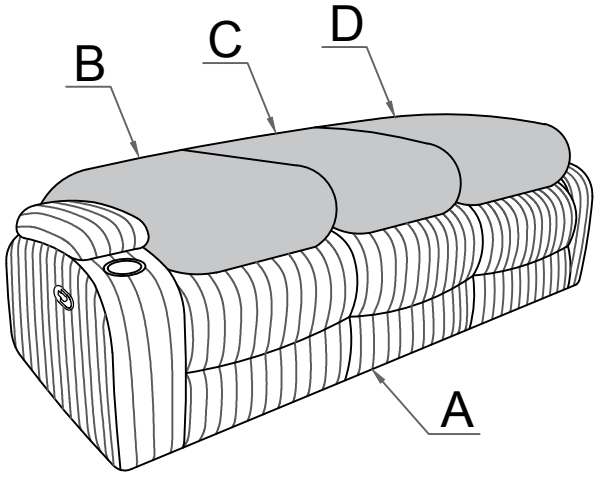

Step #2

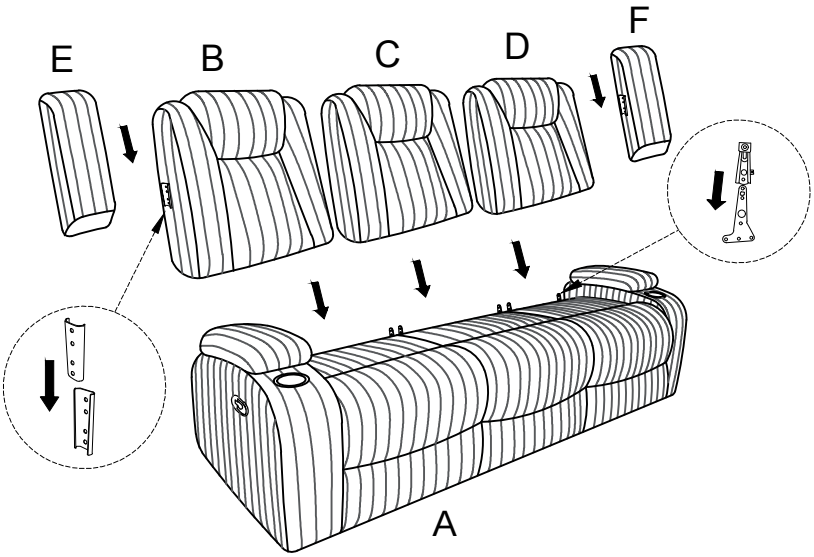

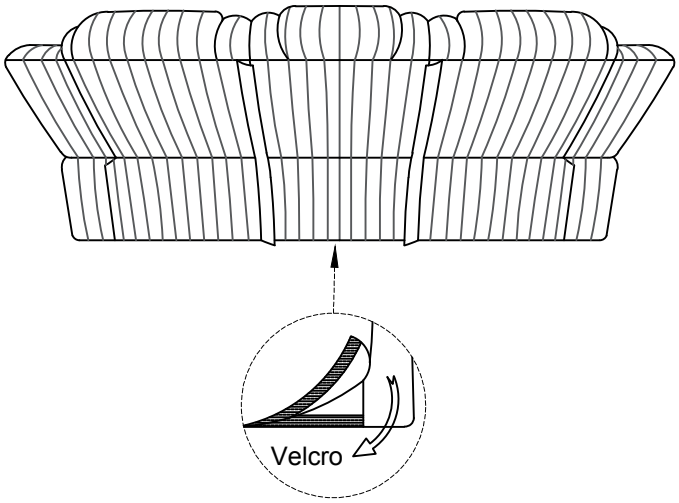

Step #3

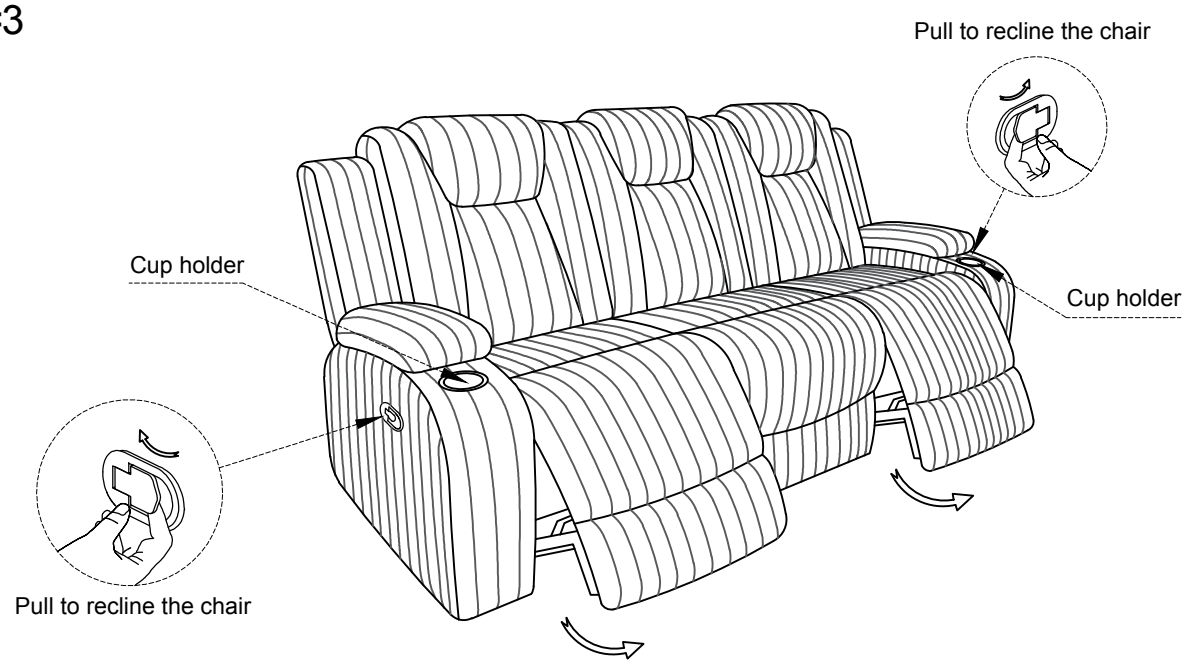

COMPLETED

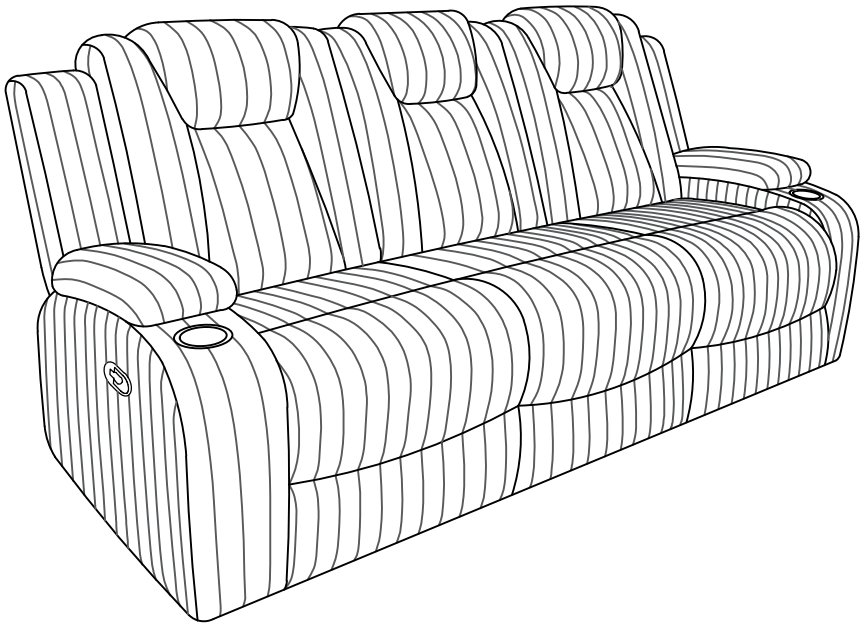

Care Instruction for Corduroy Furniture:

In order to maintain the original appearance of your Corduroy Furniture,
please follow below simple care procedures:

• Avoid exposing furniture directly to sunlight or heating and air conditioning outlets. Sunlight and/or exposure to heating and air conditioning outlets will fade/damage Corduroy.

• Vacuum or wipe with a soft cloth to remove dust.

• Hardware may loosen over time. Periodically check to make sure all connections are tight, Re-tighten if necessary.

For items use on wooden floor, hard surfaces or carpets, it is recommended to Install protective pads under all legs and supports to avoid/prevent from damages/scratches and discoloration.