ASSEMBLY INSTRUCTION
ITEM NO: FSH2636 COFFEE TABLE

Thank you for purchasing this quality product. Be sure to check all packing material carefully for small parts which may have come loose inside the carton during shipment. Separate, identify and count all parts and metal hardware. Compare with parts list to be sure all parts are present. If any part(s) are missing or damaged, please contact your local furniture dealer. For efficient and speedy service, please indicate the model number and code letter of part(s) needed.

***** Do not fully tighten bolts until fully assembled *****

No.	COMPONENT LIST		QTY
Ⓐ	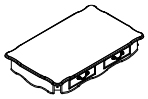	TABLE TOP	1pc
Ⓑ		TABLE LEGS	4pcs

No.	HARDWARE LIST		QTY
1		Bolts 5/16x1.6"	8pcs
2		Lock Washer 5/16"	8pcs
3		Flat Washer 5/16"	8pcs
4		Allen key K4	1pc

Step 1: Assembly Leg (B) into Table Top (A) use Bolt (1), Lock washer (2), Flat washer (3). Use Allen key (4) fully tighten all bolt.

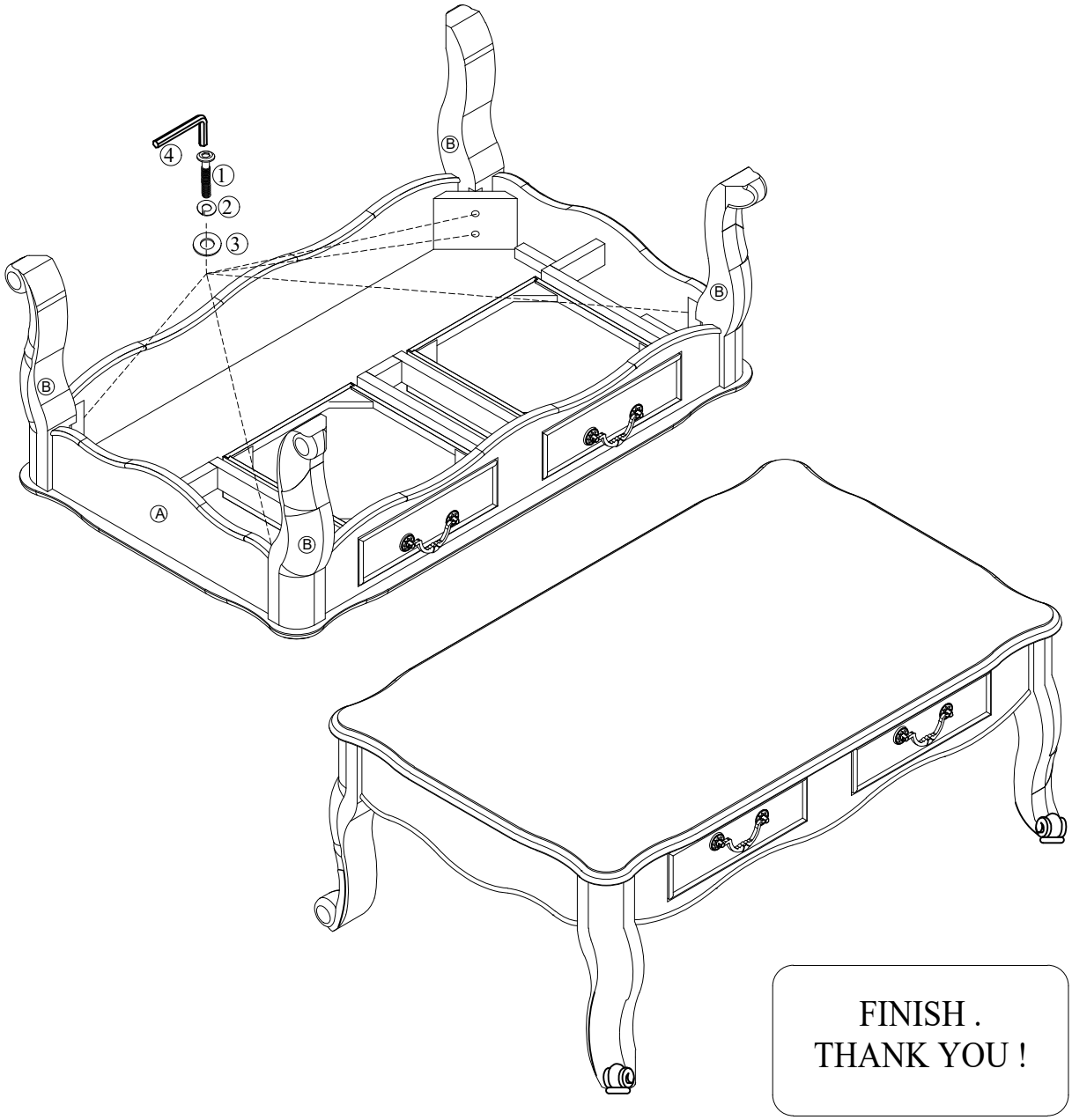

FINISH .
THANK YOU !

MADE IN VIETNAM