ASSEMBLY INSTRUCTIONS

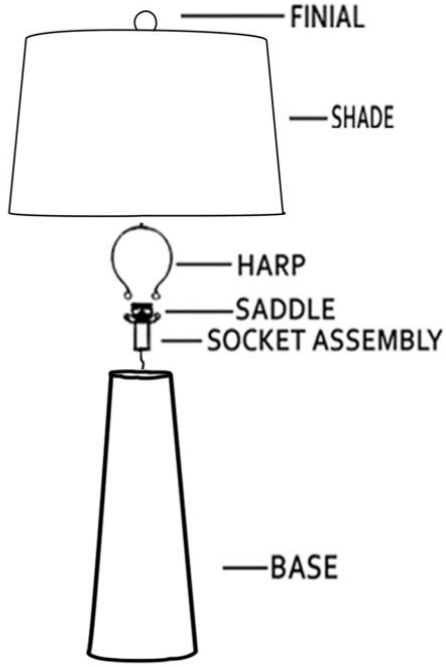

1. Carefully remove all parts from box
2. Place the lamp body on the table
3. Screw the socket assembly onto lamp body
4. Insert harp into saddle
5. Place shade onto harp
6. Screw finial onto harp to fix shade tightly (bulb not included)

IMPORTANT SAFETY INSTRUCTIONS

This portable lamp has a polarized plug(one blade is wider than the other)as a safety feature to reduce the risk of electric shock. This plug will fit in a polarized outlet only one way. If it does not fit fully in the outlet, reverse the plug. If it still does not fit, contact a qualified electrician. Never use with an extension cord unless the plug can be fully inserted. Do not alter the plug.

ASSEMBLY INSTRUCTIONS

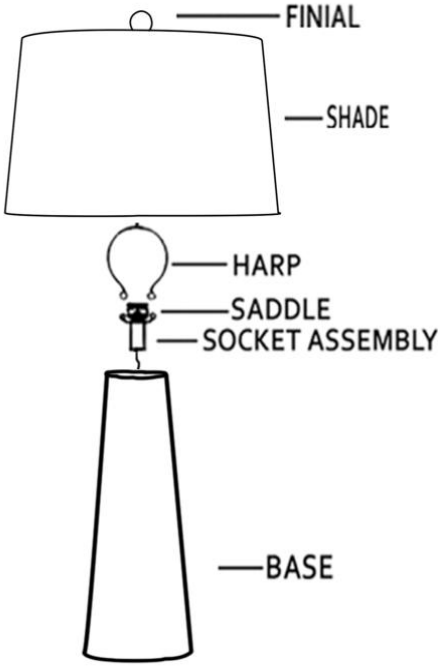

1. Carefully remove all parts from box
2. Place the lamp body on the table
3. Screw the socket assembly onto lamp body
4. Insert harp into saddle
5. Place shade onto harp
6. Screw finial onto harp to fix shade tightly (bulb not included)

IMPORTANT SAFETY INSTRUCTIONS

This portable lamp has a polarized plug(one blade is wider than the other)as a safety feature to reduce the risk of electric shock. This plug will fit in a polarized outlet only one way. If it does not fit fully in the outlet, reverse the plug. If it still does not fit, contact a qualified electrician. Never use with an extension cord unless the plug can be fully inserted. Do not alter the plug.