installation instructions:

Wood Corbels

SAFETY INSTRUCTIONS

Make sure to use the correct tools recommended.

Wear proper protective gear.

Follow fixture, power tools, paint manufacturers' instructions, and users manuals.

Use common sense and follow good construction practices.

TOOL & MATERIAL CHECKLIST

- ☐ Electric Drill
- ☐ Hammer
- ☐ Wood Glue
- ☐ Screws
- ☐ Nails

SPECIAL INSTRUCTIONS AND NOTES

- Clean installation surface and back of corbel of all dirt and dust with a clean cloth.
- Make sure that the surface of the corbel are completely dry before installation.
- Measure and mark the location where the corbel is going to be installed.
- Be sure to consult a professional about painting or staining this product.

STEP BY STEP INSTRUCTIONS

1. Lay the corbel face down on a soft surface that will not damage the corbel detail.
2. Apply wood glue to the installation areas of the corbel, top and/or back.
3. When pressing the corbel up against the surface, some glue will seep out. Wipe these areas clean to ensure a quality installation.
4. Install by either (A) toe nailing the corbel from the sides, (B) screwing straight through the corbel C) screwing through the wall from behind, or (D) use the keyholes on the back of the corbel to hang the bracket.

When ordering a corbel for your countertop installation, keep in mind the corbel must be sufficiently supported by an adequate fastening system and structure such as stud wall or reinforced cabinet backing. Installation of a heavy duty countertop corbel on a weak support structure will result in failure of the total system. This is why it is important to consider, and consult with a design engineer when necessary, all aspects of the countertop installation.

In instances where the corbels will be adhered directly to a granite counter we suggest only using adhesives and not drilling into the countertop. Drilling during installation can weaken the stone or possibly crack the counter.

EXAMPLE INSTALLATION DIAGRAMS

A.

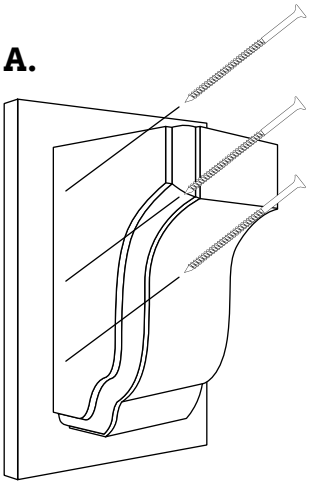

B.

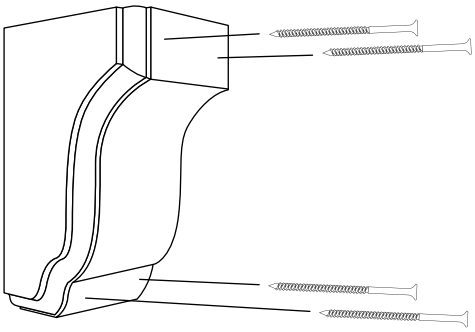

C.

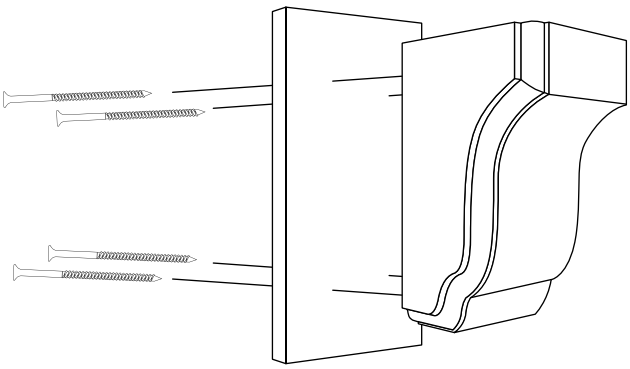

Architectural Specifications
Hardwood Carvings

EKENA MILLWORK

Part 1: General

1.1 Selection Includes

Hardwood Carvings

1.2 Project Conditions

Maintain environmental conditions (temperature, humidity, and ventilation) within limits recommended by manufacturer for optimum results. Do not install products under environmental conditions outside manufacturer's limits.

Part 2: Products

2.1 Acceptable Manufacturer

A. Ekena Millwork
2300 Main Street
Clarksville, TX 75426
866-607-0453
www.ekenamillwork.com
B. Substitutions: Not permitted.

2.2 Materials

Wood: Carved from kiln-dried hardwood. (Alder, Red Oak, Maple, Mahogany, Walnut, Cherry, Rubberwood, Lindenwood)

2.3 Fabrications

Carved items are milled in hardwoods to exacting dimensions. For larger items, individual pieces of lumber are assembled into a block using strong Type-I waterproof glue. Pressure is applied around the blocks transforming the individual lumber into a single unit, ready for precision carving.

2.4 Finish

Materials are fully sanded and shipped raw/unfinished.

Part 3: Execution

3.1 Installation

Install in accordance with manufacturer's instructions.

Architectural Specifications
Application Tips

EKENA MILLWORK

Stains can be applied with a bristle brush, a foam brush, cloth, HVLP & air powered gun

On woods with large, open pores, such as oak, mahogany and ash, increase your pressure to work the stain into the pores. Rubbing or brushing against the direction of the grain will help fill deep pores with stain. Apply a liberal amount of stain, giving the wood an ample amount to absorb.

Oil-Based Stains Vs. Water-Based Stains

Oil-based stains gives you a longer working time and does not raise the grain, eliminating the need for additional sanding. Water-based stains are lower in odor than oil-based stains and dries fast, enabling you to stain and finish in one day. Water-based stains require only soap and water for clean-up and comes in a wider range of vibrant colors.

The option of using a Pre-Stain Wood Conditioner

A pre-stain wood conditioner penetrates the grain of the wood to promote uniform acceptance of the stain. This additional step can help prevent streaks and blotches by evening out the absorption of the stain. Pre-stain wood conditioner can be applied over any wood species but it is especially helpful when working with species that are more porous.

Pay attention to how long you leave the stain on the wood before wiping off any unabsorbed liquid

The longer the stain is left on, the deeper and richer the color will be. For consistent color, use careful timing. Never allow any stain to dry on the wood surface—it will prevent the clear finish from adhering and cause other issues.

Remove the last of any unabsorbed stain with a dry cloth, wiping in the direction of the wood grain

Swirl marks left by a stain-saturated cloth will become even more obvious under a coat of clear finish.

Remember: a stain provides color, but not protection

Once the stain has dried, apply a clear finish to protect both the stain and the wood—and to make the final results look even more beautiful.