ASSEMBLY INSTRUCTION

8-A

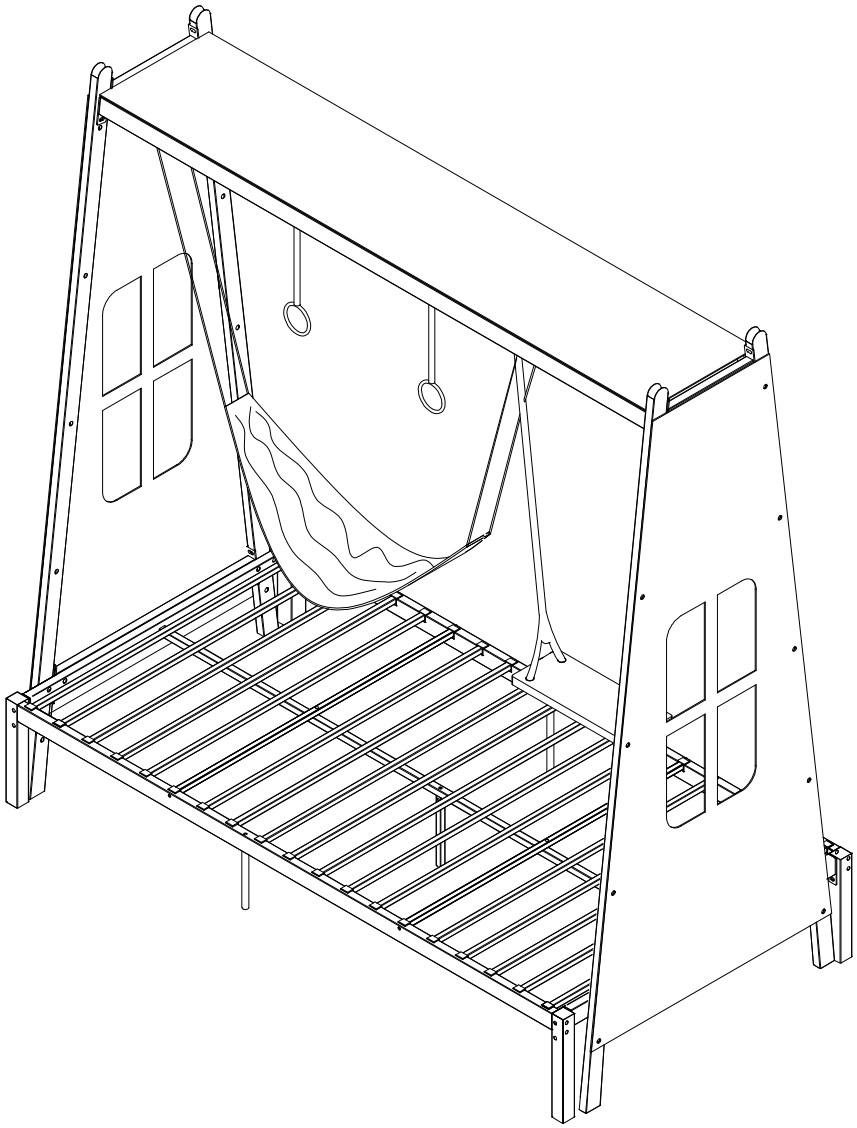

IMPORTANT NOTE

1.Please check that all parts are complete before installation.
2.Please strictly follow the installation steps to install.
3.Please install the bed on a clean and smooth surface to prevent any damage
4.Please do not use the power tools to assemble the bed.
5.Please periodically check all the fittings and re-tighten as necessary.
6. Please do not use the bed unless all bolts and screw are firmly secured
7.Note: Distinguishing between the numbers 6 and 9 is different,
with the number 9 underlined; Please tighten all screws by 60% first,
and then tighten them by 100% after installation is complete.

BUNK-BED ASSEMBLY INSTRUCTIONS

SAFETY WARNINGS AND GENERAL NOTES:

1. Follow the information on the warnings on the bunk bed end structure and on the carton. Do not remove the warning label from the bed.
2. Always use the recommended size mattress support, or both, to help prevent the likelihood of entrapment or falls.
3. Do not allow children under 6 years of age to use the upper bunk.
4. Periodically check and ensure the guardrail, ladder and other components are in their proper position, free from damage, and all connectors are tight.
5. Do not allow horseplay on or under beds.
6. Always prohibit jumping on the upper bunk.
7. Prohibit more than one person on the upper bunk.
8. Always use the ladder for entering and leaving the upper bunk.
9. Do not use substitute parts. Contact the manufacturer or dealer for replacement parts.
10. Use of a night-tight may provide added safely precaution for a child using the upper bunk.
11. Always use guardrails on both long sides of the upper bunk.
12. If the bunk bed will be placed next to a wall, the guardrail that runs the full length of the bed should be placed against the wall to prevent entrapment between the bed and the wall.
13. The use of water or flotation mattresses is prohibited.

STRANGULATION HAZARD–Never attach or hang items to any part of the bunk bed that are not designed for use with the bed.

14. Keep these instructions for future reference.
15. We recommend assembling your bunk bed on the shipping carton to protect your floor or carpet.
16. Be certain all staples are out of the box before beginning assembly on the shipping carton.
17. USE ONLY MATTRESSES WHICH ARE AS THE TABLE BELOW ON UPPER AND ON LOWER BUNKS.

Bed type	**Length**	**Width**	**Thickness**
Twin Standard	74" - 75"	38 ½"	6"

18. SURFACE OF MATTRESS MUST BE AT LEAST 5" (127MM) BELOW THE UPPER EDGE OF GUARDRAIL

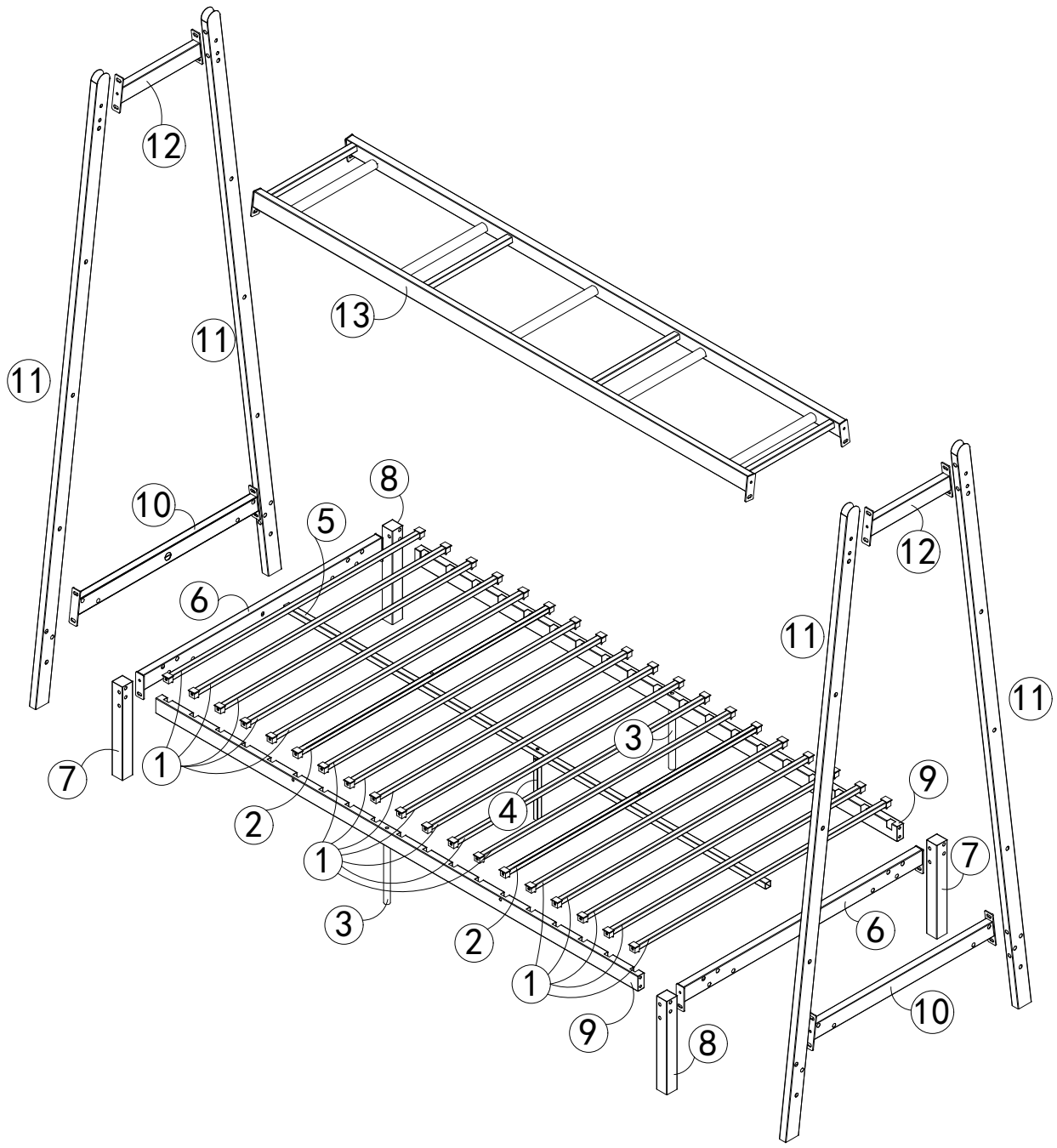
12
13
11
11
10
8
5
6
7
1
2
1
3
3
4
2
1
9
9
12
11
11
7
6
10
8

Components List

① x17

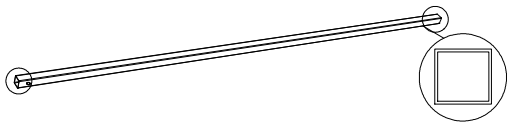

② x2

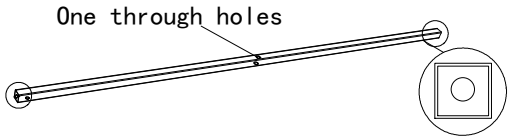

③ x2



④ x1



⑤ x1

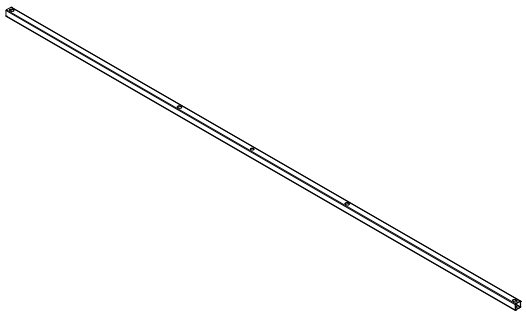

⑥ x2

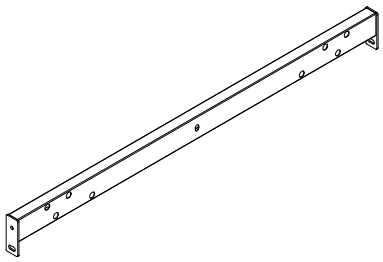

⑦ x2

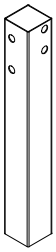

⑧ x2

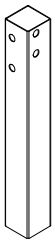

⑨ x2

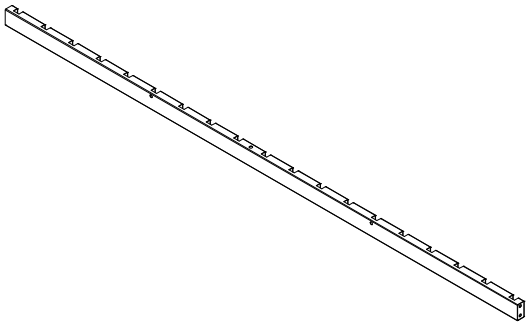

⑩ x2

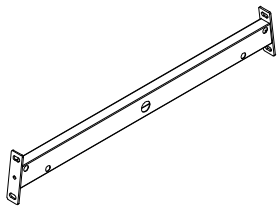

⑪ x4

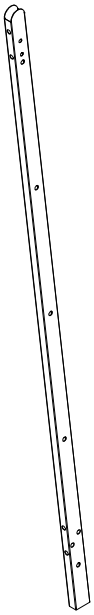

⑫ x2

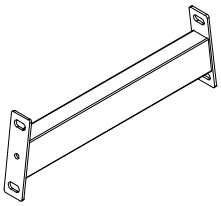

⑬ x1

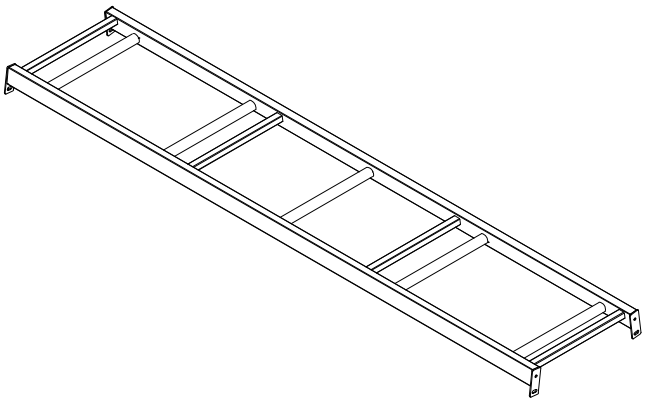

Components List

15 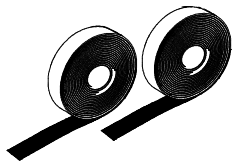

Sound Insulation Cotton

16 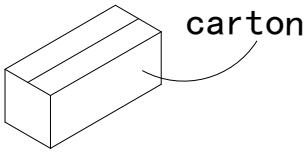

Swing board and ropes

17 plastic bag 

Hammock fabric and hammock straps

18 plastic bag 

Rings and hammock straps

19 plastic bag 

canopy

Hardwares List

Item	Description	Qty
A	 M8x60	16
B	 M8x40	8
C	 M8x20	18
D	 M8x55	18
E	 M6x40	4
G	 M6x20	1
H	 16X16	38
J	 M6 Allen key	1
K	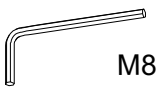 M8 Allen key	2

Item	Description	Qty
N	 ϕ16 M8	68
P	 M8	28
Q	 M14	1
R	 M6x12	2
S	 M6x30	2

Step 1

D	M8x55	8
N	M8	12
C	M8x20	16
K	M8 Allen key	2
P	M8	4

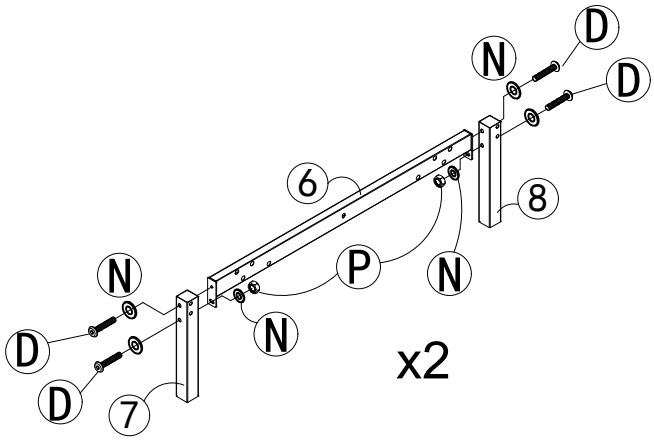

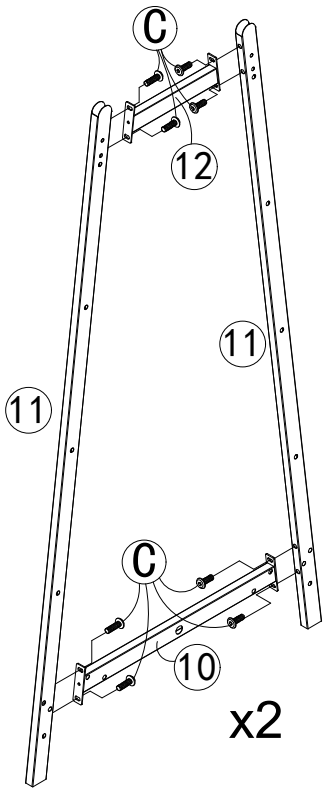

Step 2

D	M8x55	10
N	M8	8
K	M8 Allen key	1
G	M6x20	1
C	M8x20	2
J	M6 Allen key	1

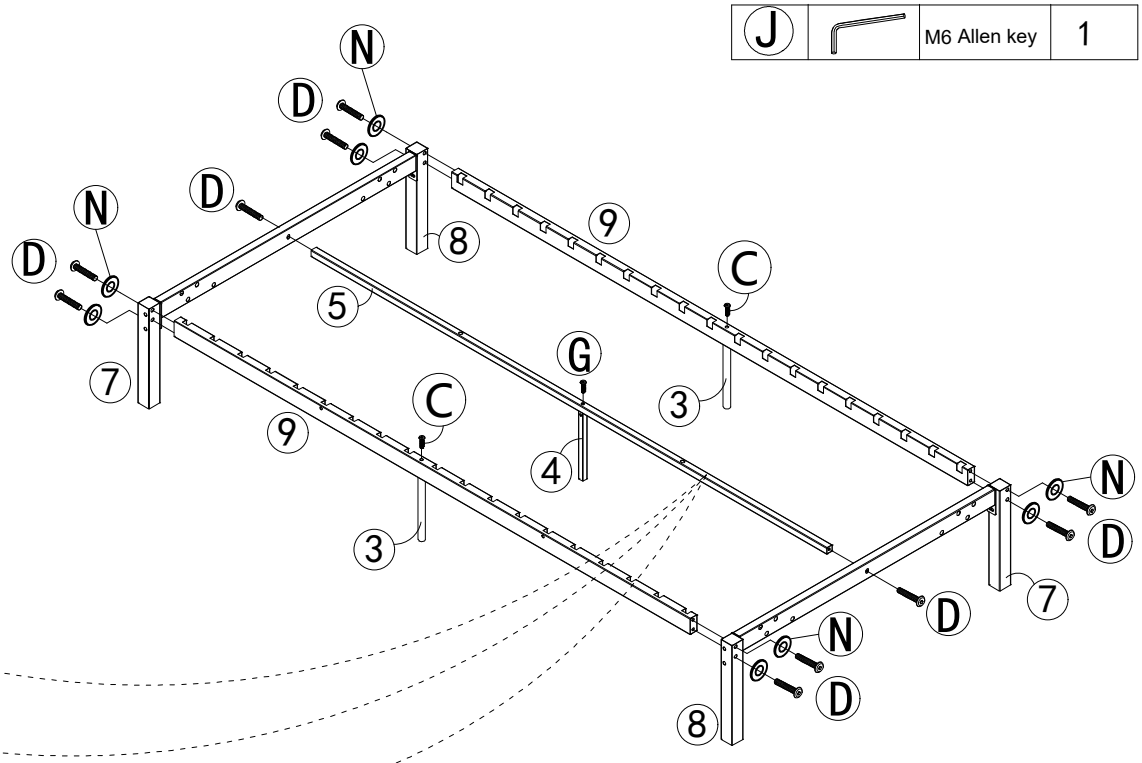

REMARK: 2.1
Clean the sticking part and keep it clean before sticking the velcro, to avoid affecting the stickiness.

REMARK: 2.2
Tear off the white isolation paper on the back of Sound Insulation Cotton

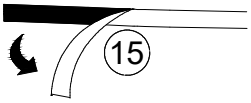

REMINDER: 2.3
Do not cover the holes and paste on the upper position of the view of the rail as shown.

Step 3

K		M8 Allen key	1
Q		M14	1
B		M8x40	8
A		M8x60	16
P		M8	24
N		M8	48

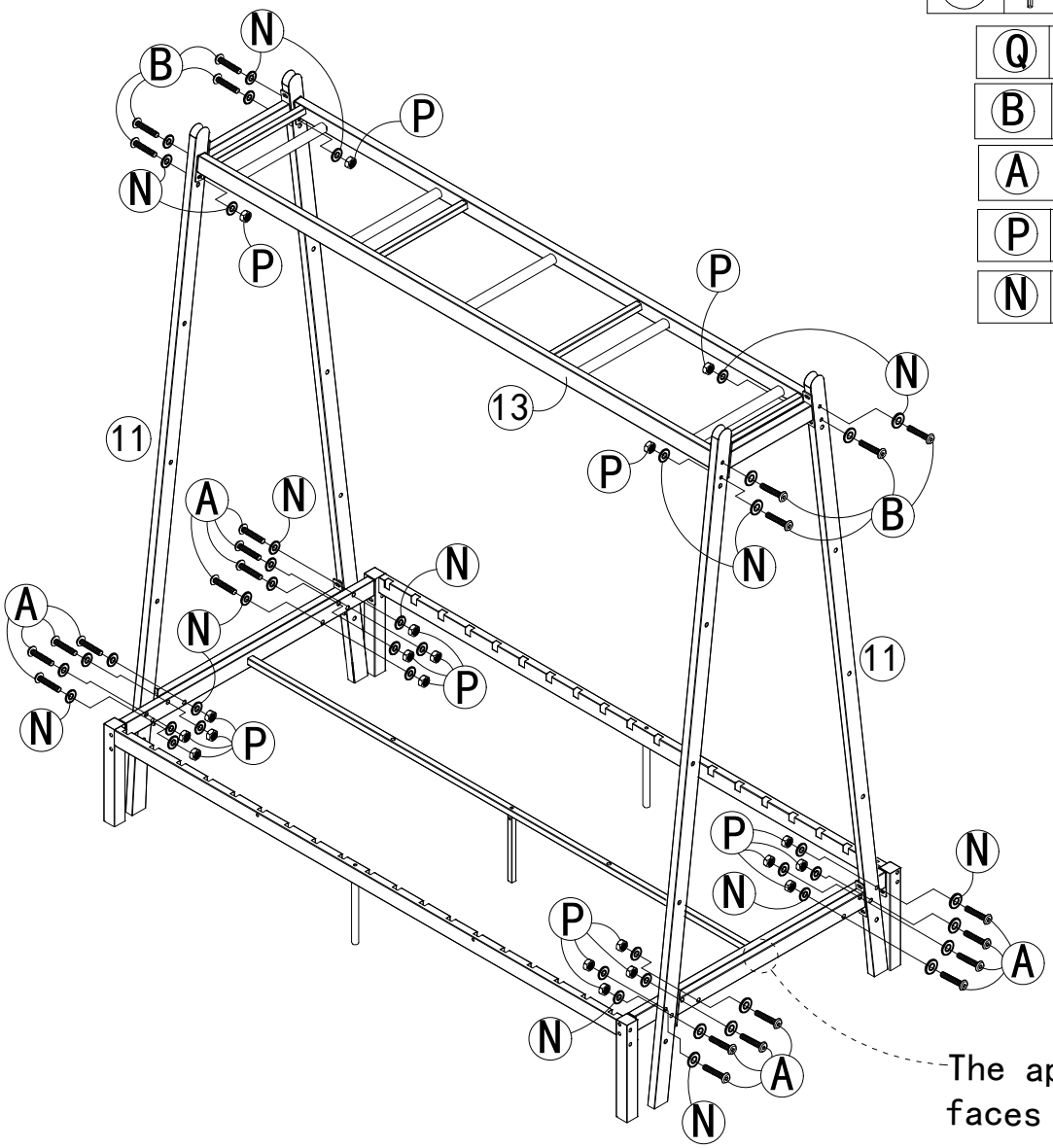

The apertured side faces inwards.

Step 4

H			38
S		M6x30	2
R		M6x12	2

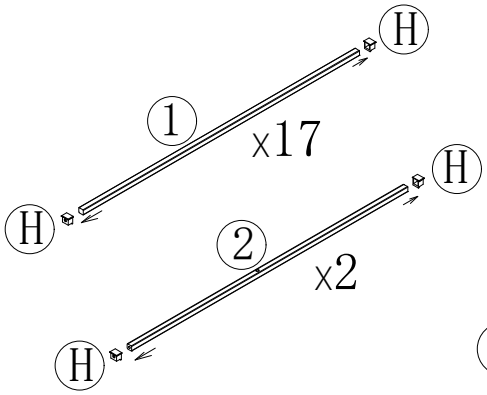

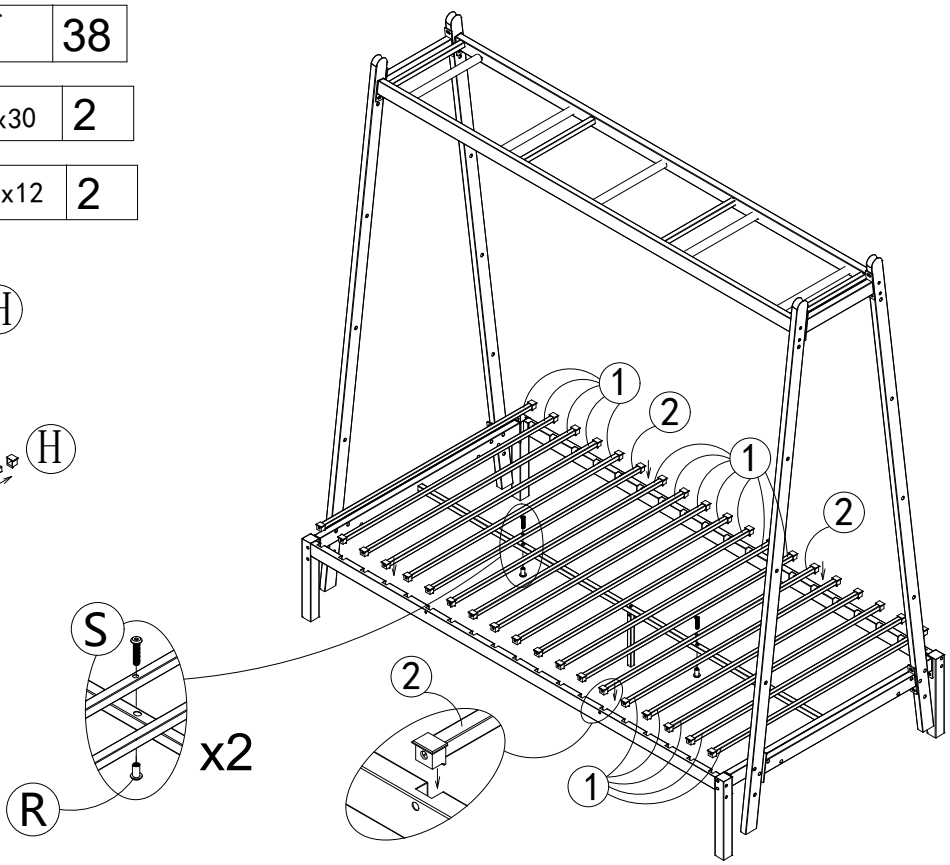

Step 5

E		M6x40	4
J		M6 Allen key	1

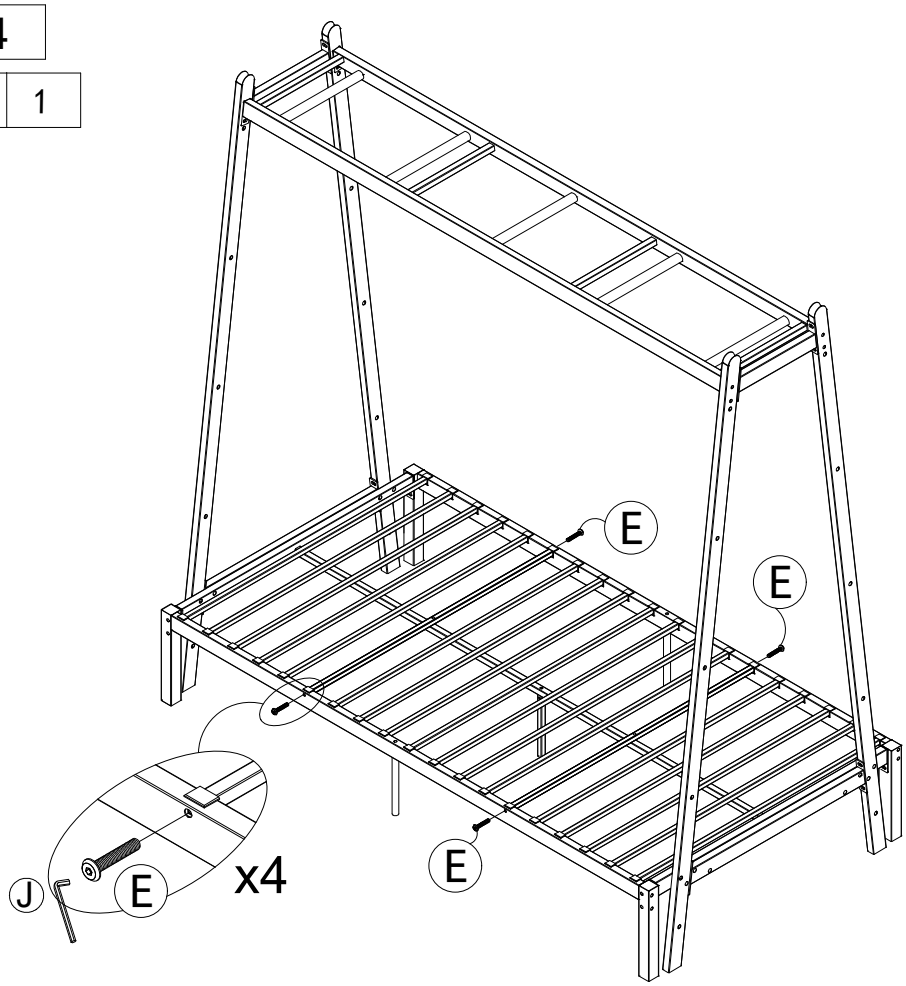

Step 6

1. Open the box labeled 16, thread the rope through the hole in the seat board, tie a knot by winding it together as shown in the diagram, split into two sides, and finally tie a secure knot with the other end of the rope around the top tube.

2. Open the plastic bag labeled 17, thread the rope through the hammock fabric as shown in the illustration, then tie both ends of the rope securely to the top tube with knots.

3. Open the plastic bag labeled 18, thread the rope through the hanging loop and tighten it securely as shown in the illustration, then tie both ends of the rope to the top tube with firm knots.

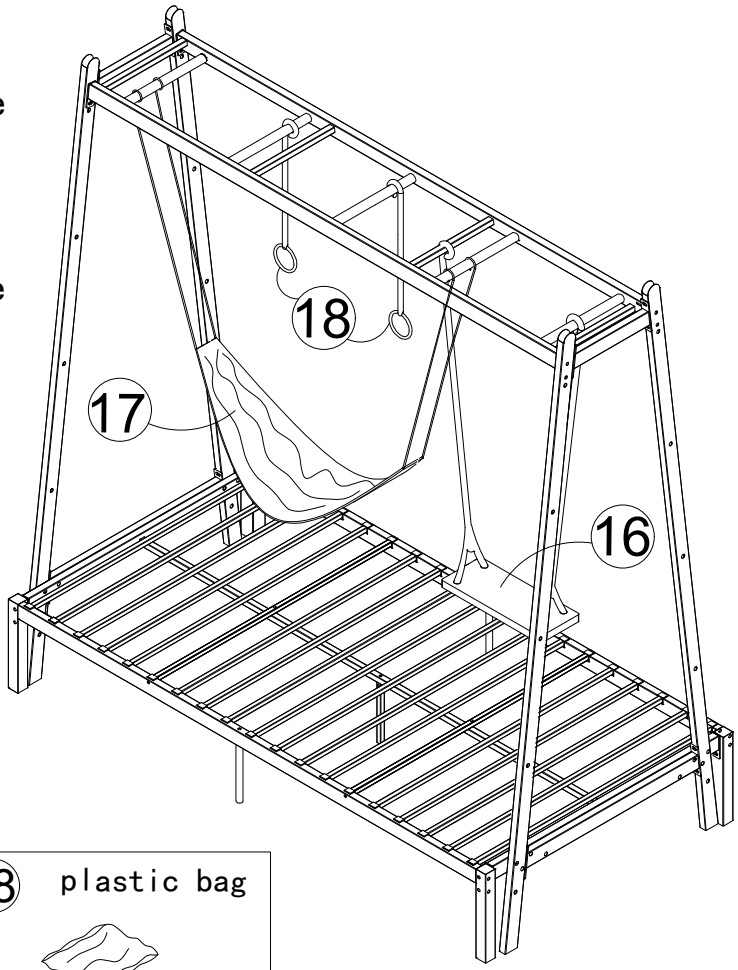

16 carton

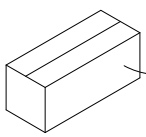

Swing board and ropes

17 plastic bag



Hammock fabric and hammock straps

18 plastic bag

Rings and hammock straps

Step 7

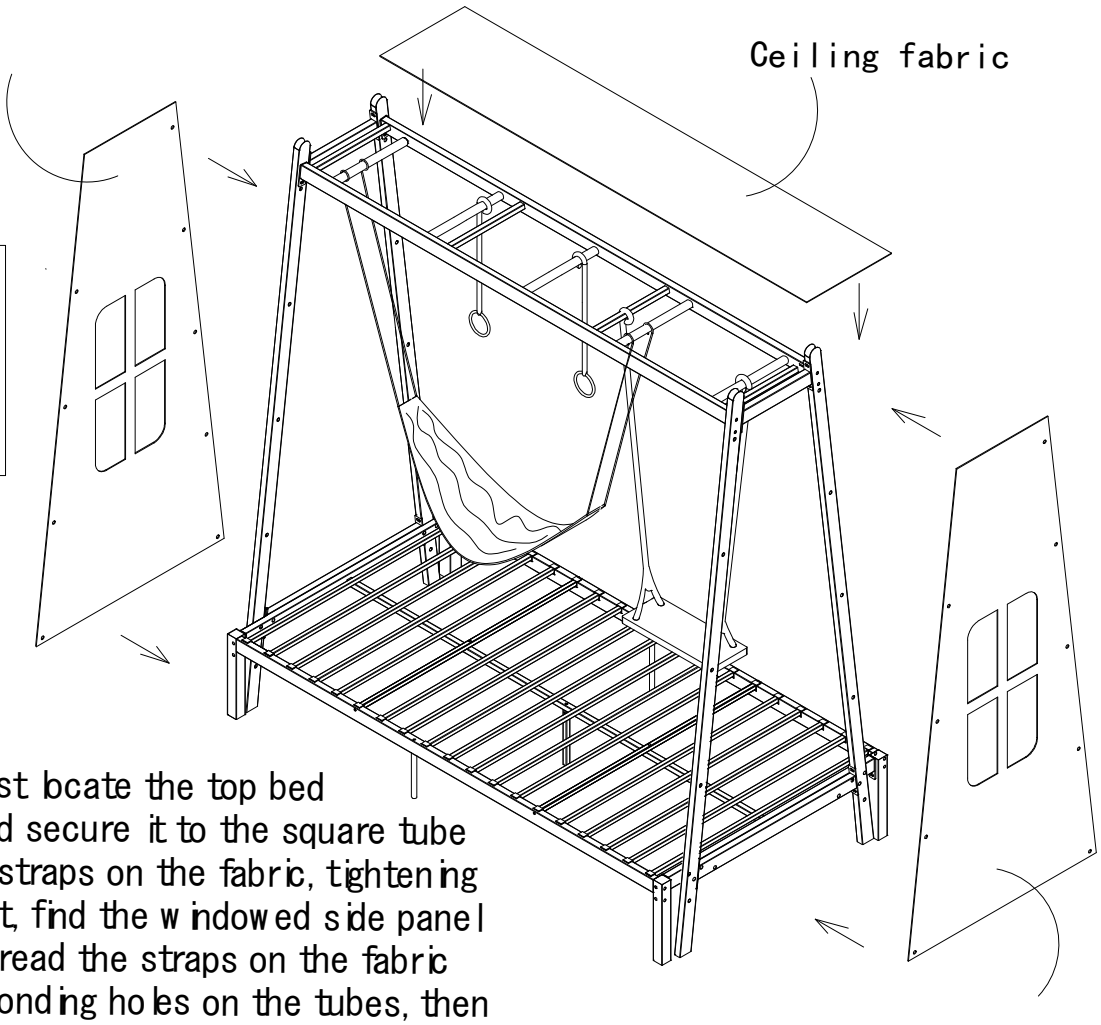

19 plastic bag



canopy

Open bag No. 19, first locate the top bed decorative fabric and secure it to the square tube using the pre-sewn straps on the fabric, tightening all connections. Next, find the windowed side panel decorative fabric, thread the straps on the fabric through the corresponding holes on the tubes, then tie them securely.

Step 8

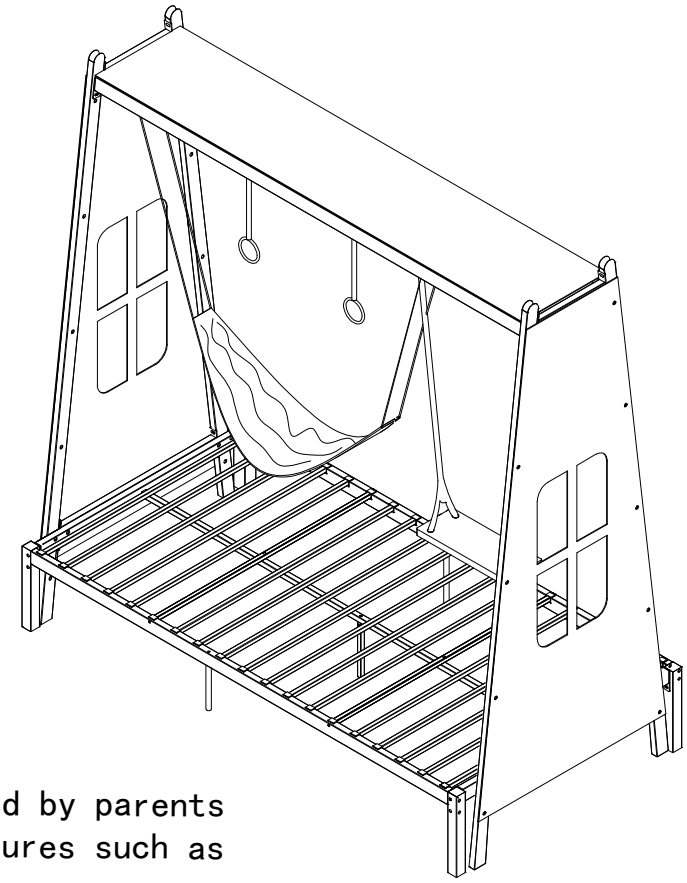

Children should be supervised by parents when using bed-attached features such as swings or rocking beds.