Version： 1.0

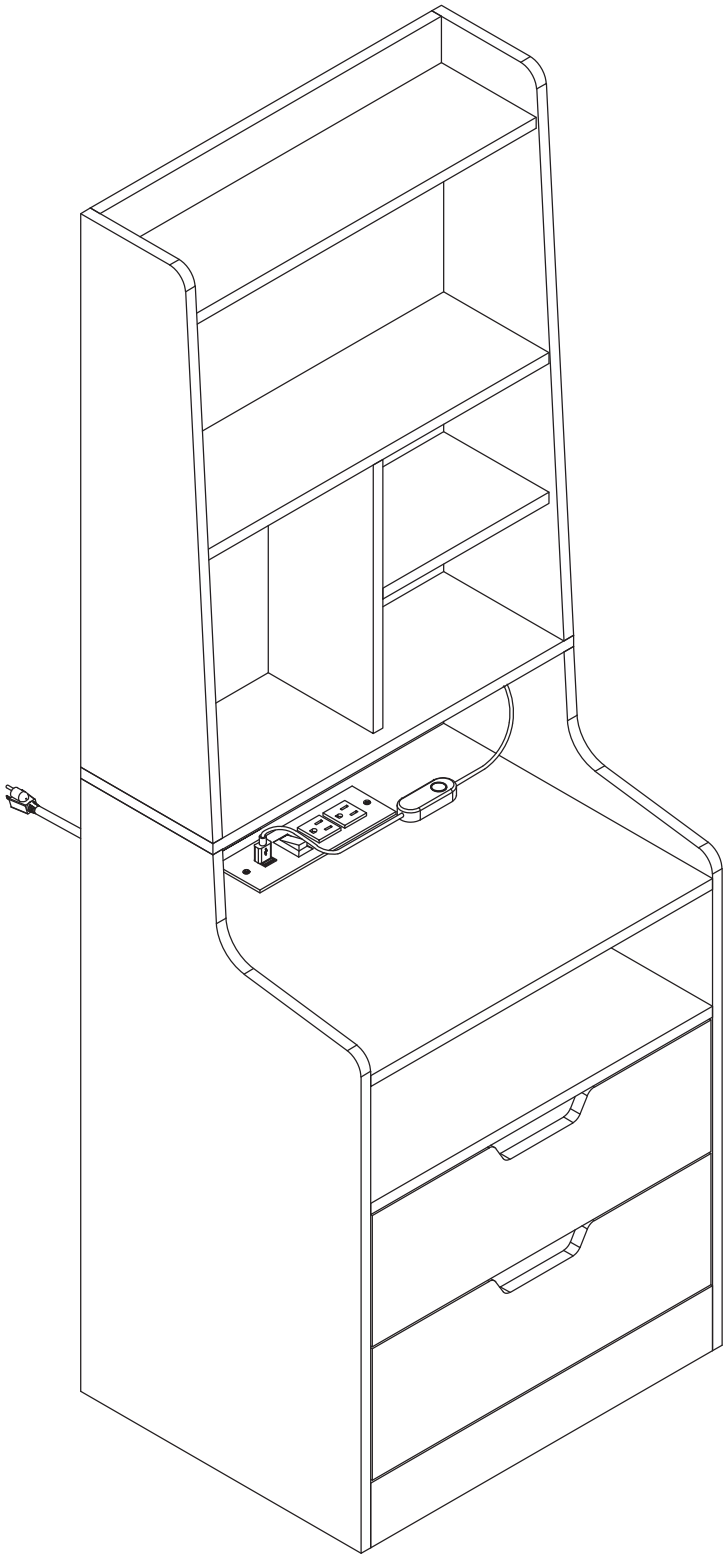

2 PERS.

30 MIN

DJ502863

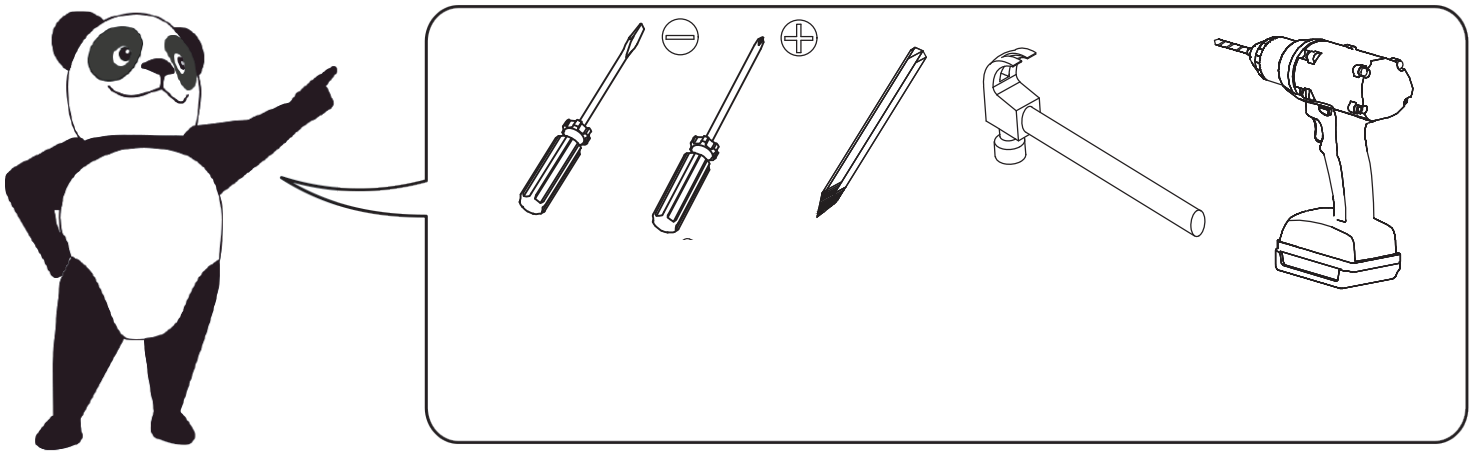

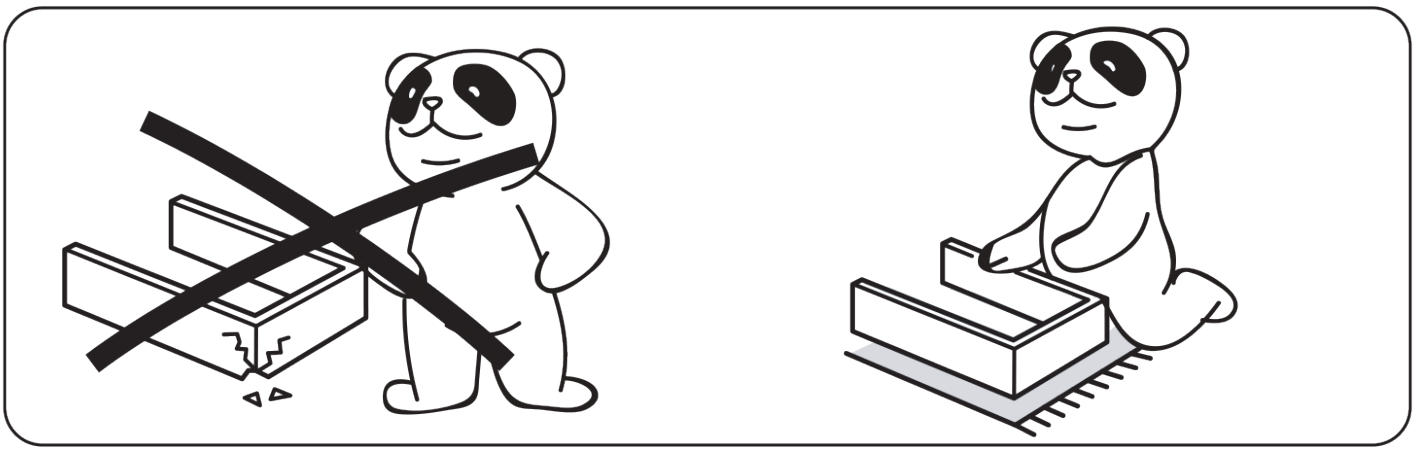

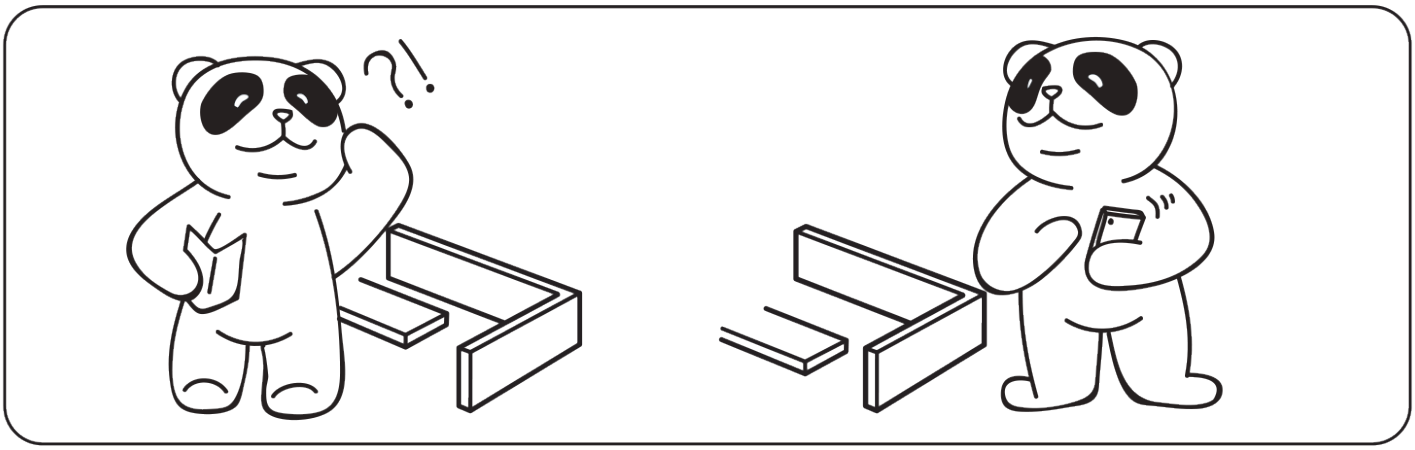

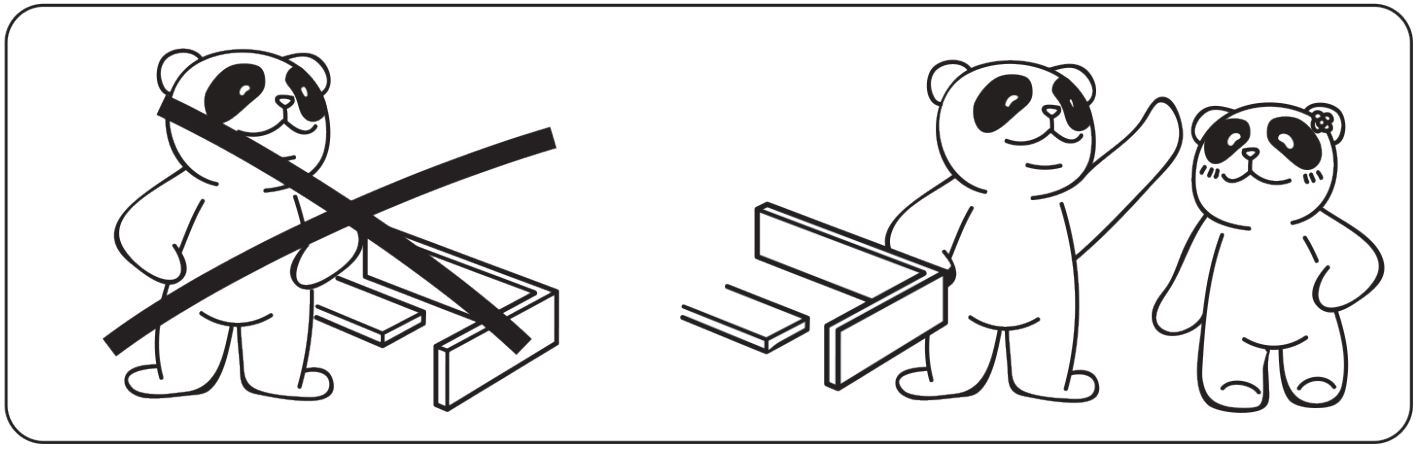

# Installation Parts



**A**

x31(+2)

Ø6x35mm

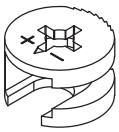

**B**

x31(+2)

Ø15x10mm



**C**

32(+2)

Ø6x30mm

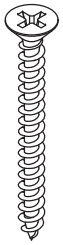

**D**

x16(+1)

Ø4x35mm



**E**

x24(+2)

Ø3.5x10mm

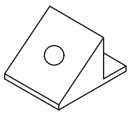

**F**

x16(+1)



**G**

x16(+1)

Ø3x16mm

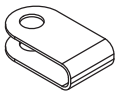

**H**

x3



**I**

x3

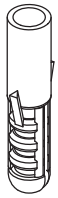

**J**

x2

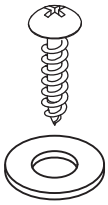

**K**

x2



**L**

x5



**M**

x2

Ø3.5x12mm

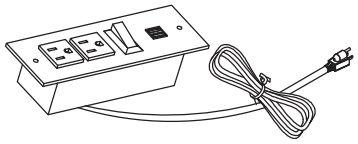

**N**

x1

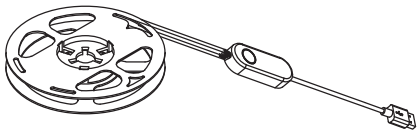

**O**

x1



**P**

x2

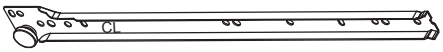


**CL**

x2

L300mm

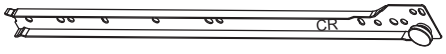


**CR**

x2

L300mm

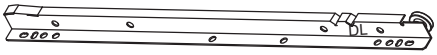


**DL**

x2

L300mm

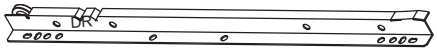


**DR**

x2

L300mm

# Install the footstool

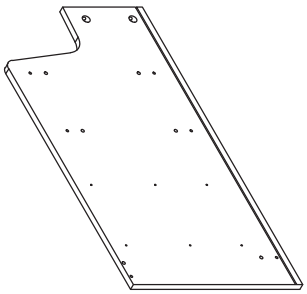

1 x1

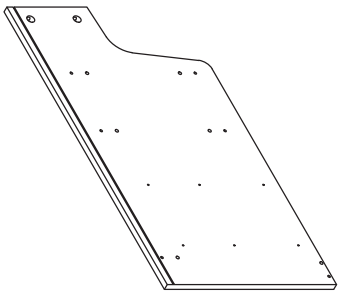

2 x1

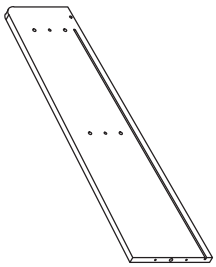

3 x1

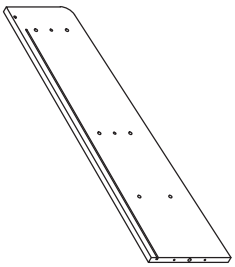

4 x1

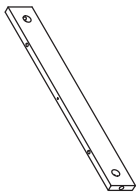

5 x1

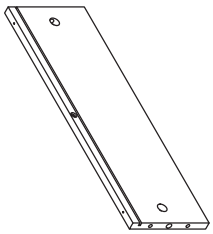

6 x1

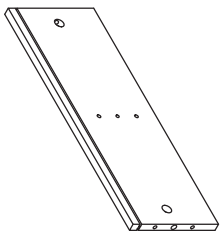

7 x1

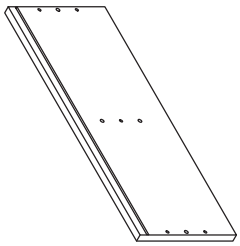

8 x1

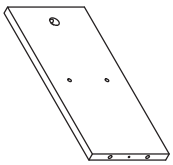

9 x1

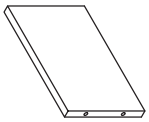

10 x1

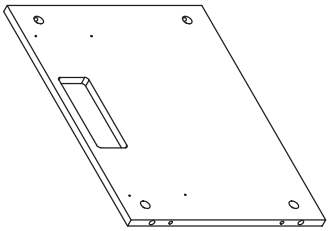

11 x1

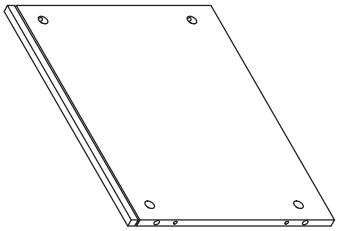

12 x1

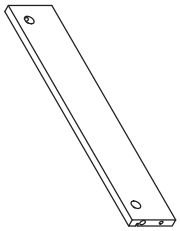

13 x1

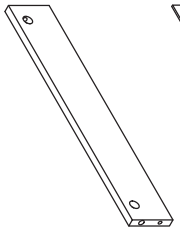

14 x1

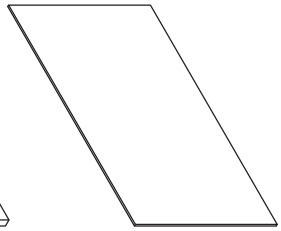

15 x1

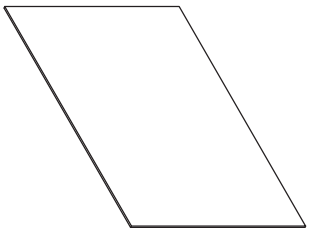

16 x2

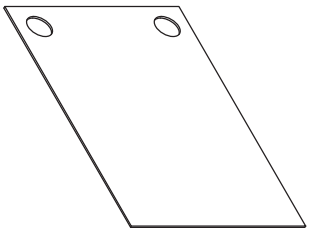

17 x1

# Drawer

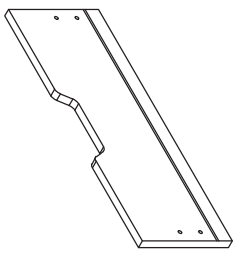

18 x2

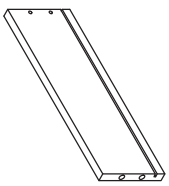

19 x2

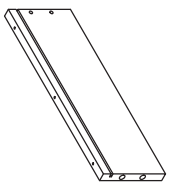

20 x2

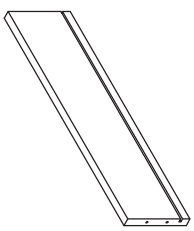

21 x2

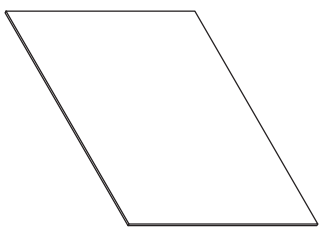

22 x2

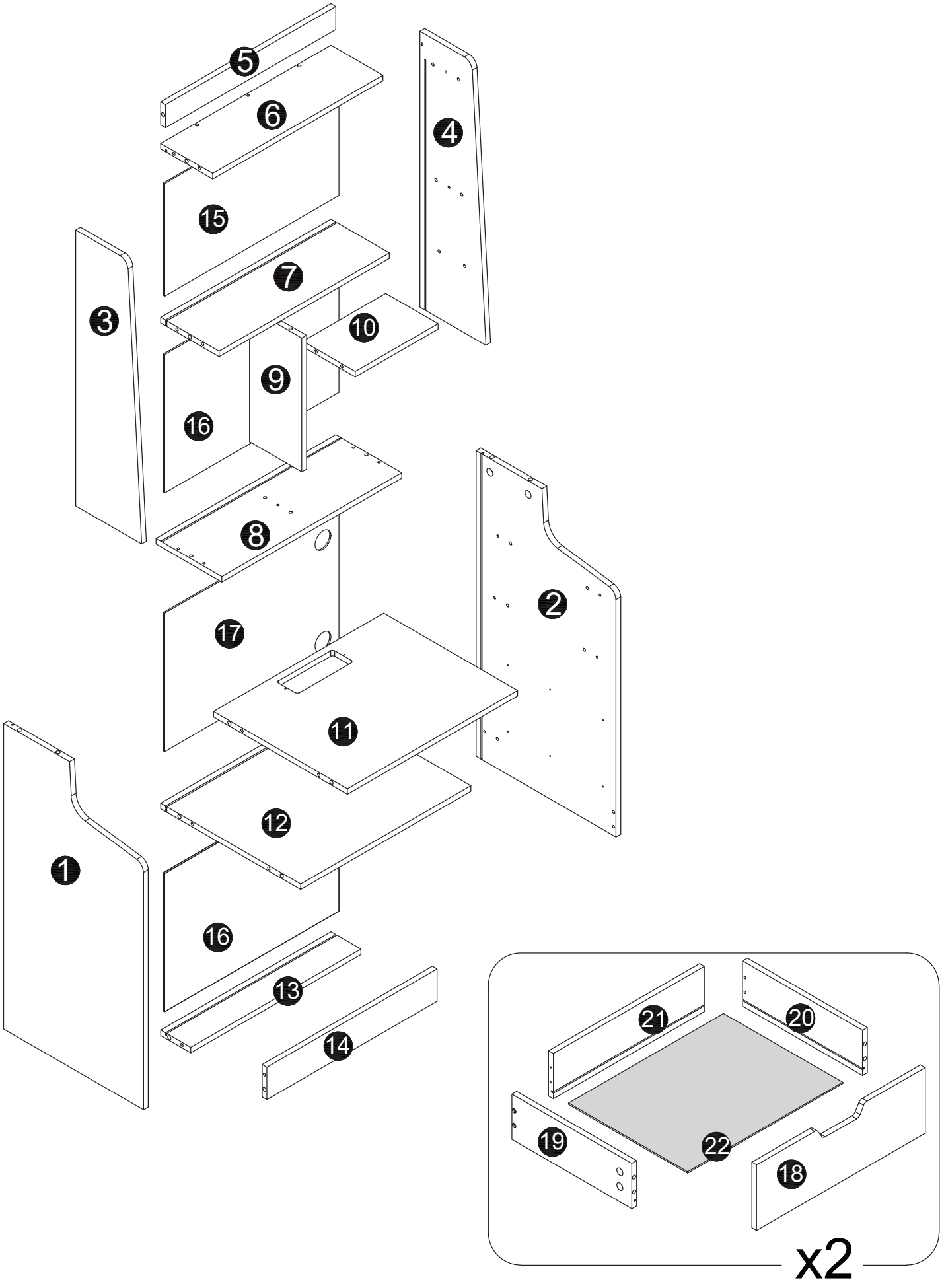
5
6
4
15
7
3
10
9
16
8
2
17
11
1
12
16
13
14
21
20
19
22
18
x2

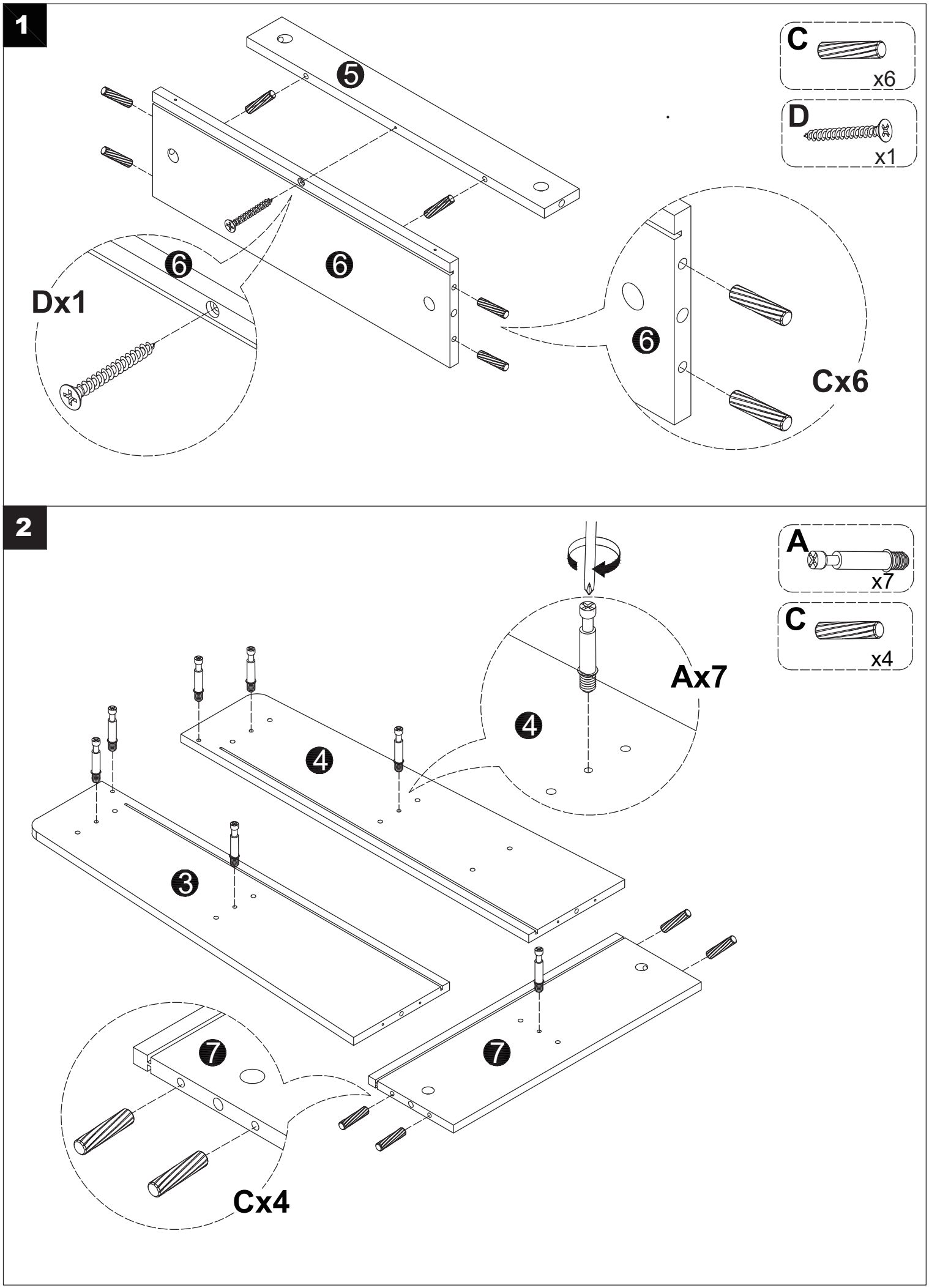
1
C
x6
D
x1
5
6
6
Dx1
6
Cx6
2
A
x7
C
x4
Ax7
4
4
3
7
7
Cx4

**3**

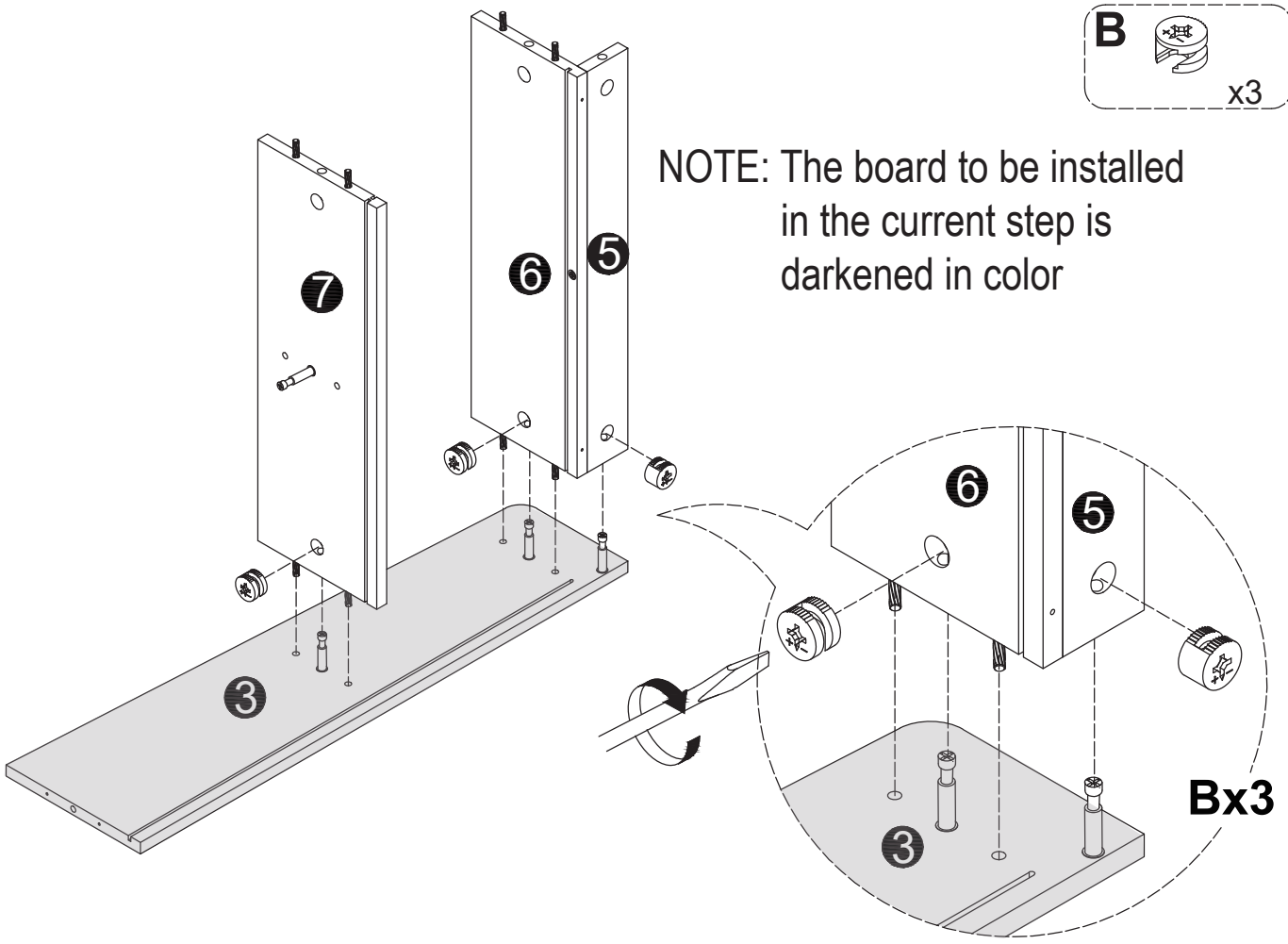
B
x3
NOTE: The board to be installed in the current step is darkened in color
7
6
5
3
Bx3

**4**

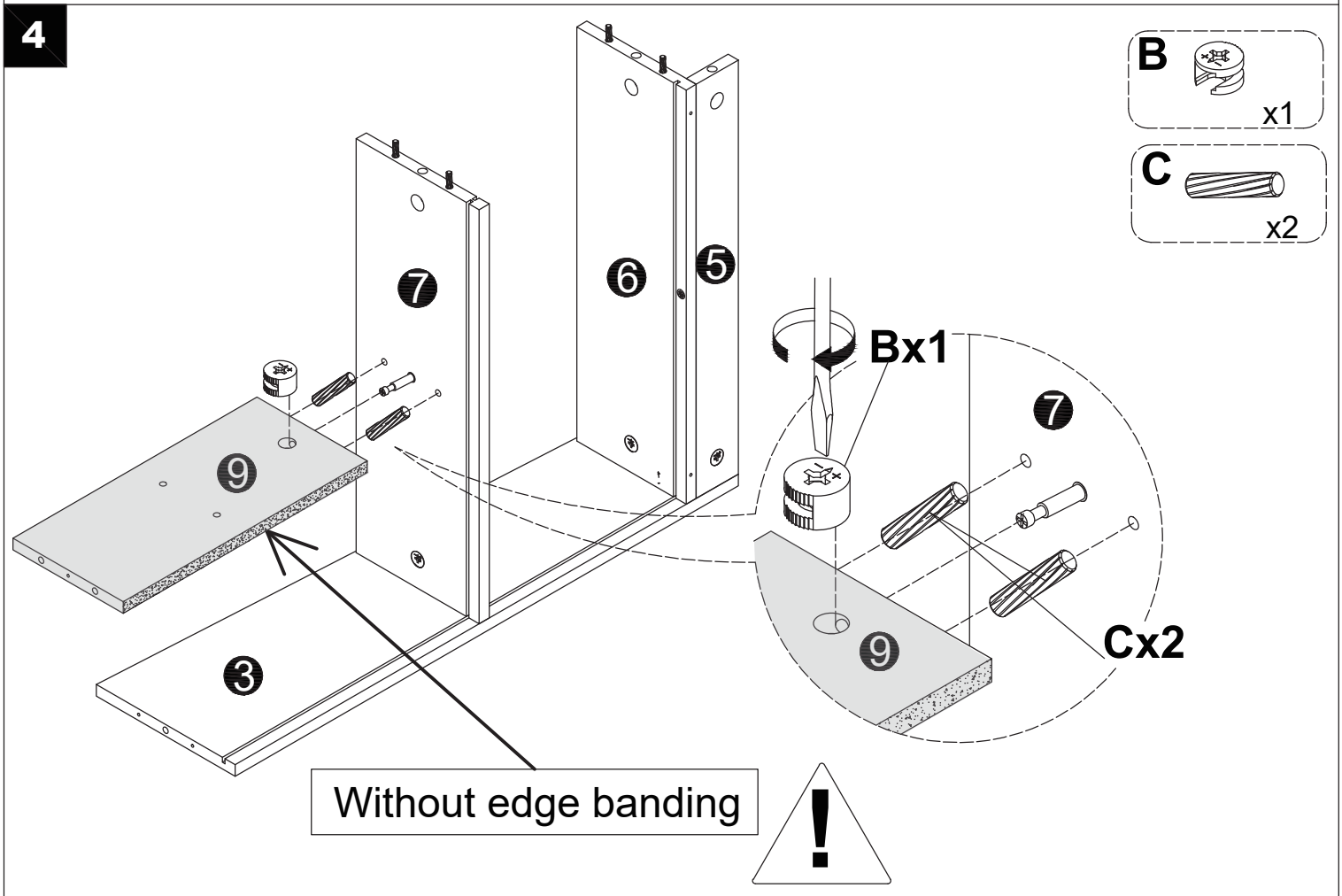
B
x1
C
x2
7
6
5
9
3
Bx1
Cx2
Without edge banding
!

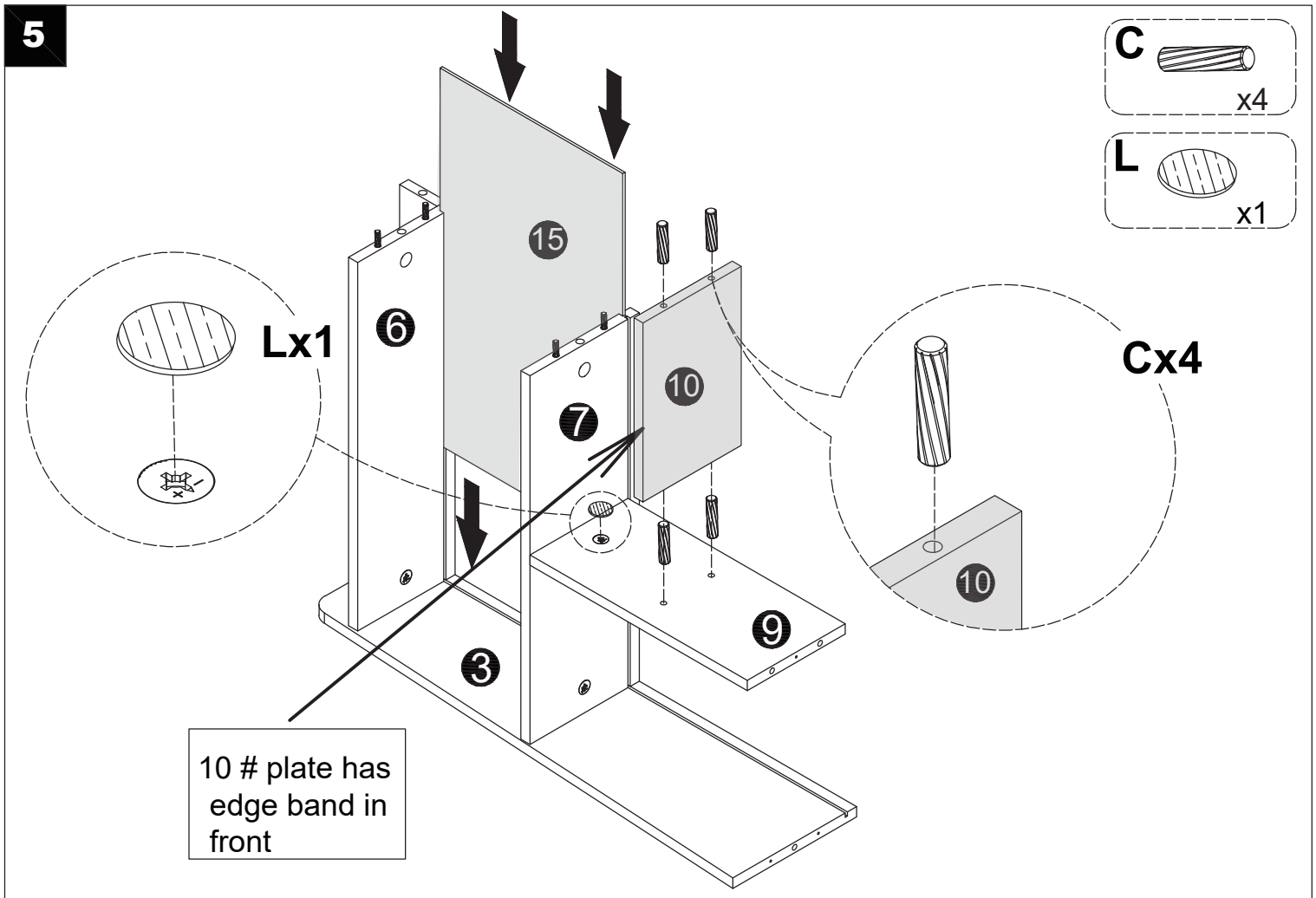
5
C
x4
L
x1
Lx1
Cx4
15
6
10
7
9
3
10
10 # plate has edge band in front

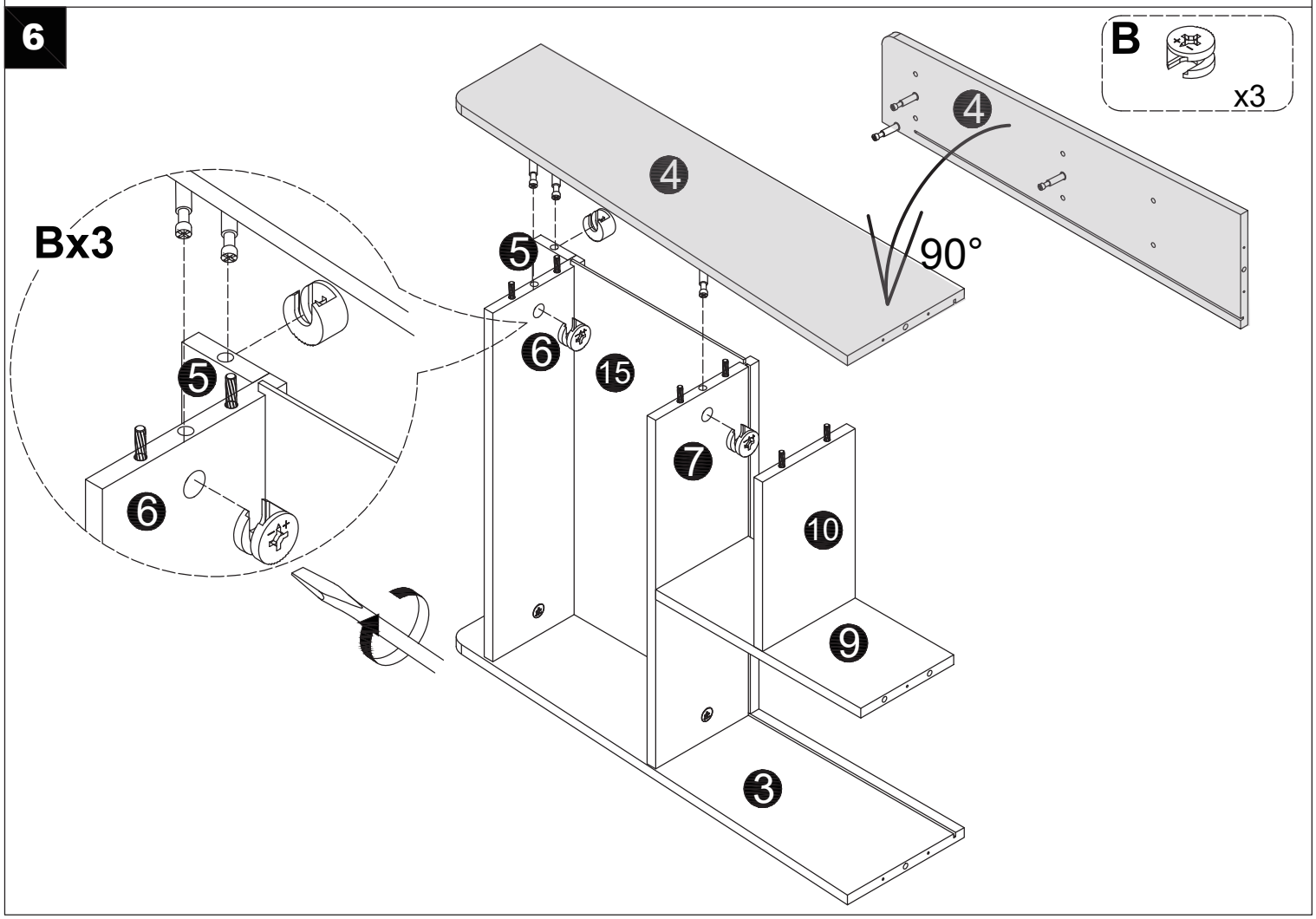
6
B
x3
4
4
90°
Bx3
5
6
15
5
7
6
10
9
3

**7**

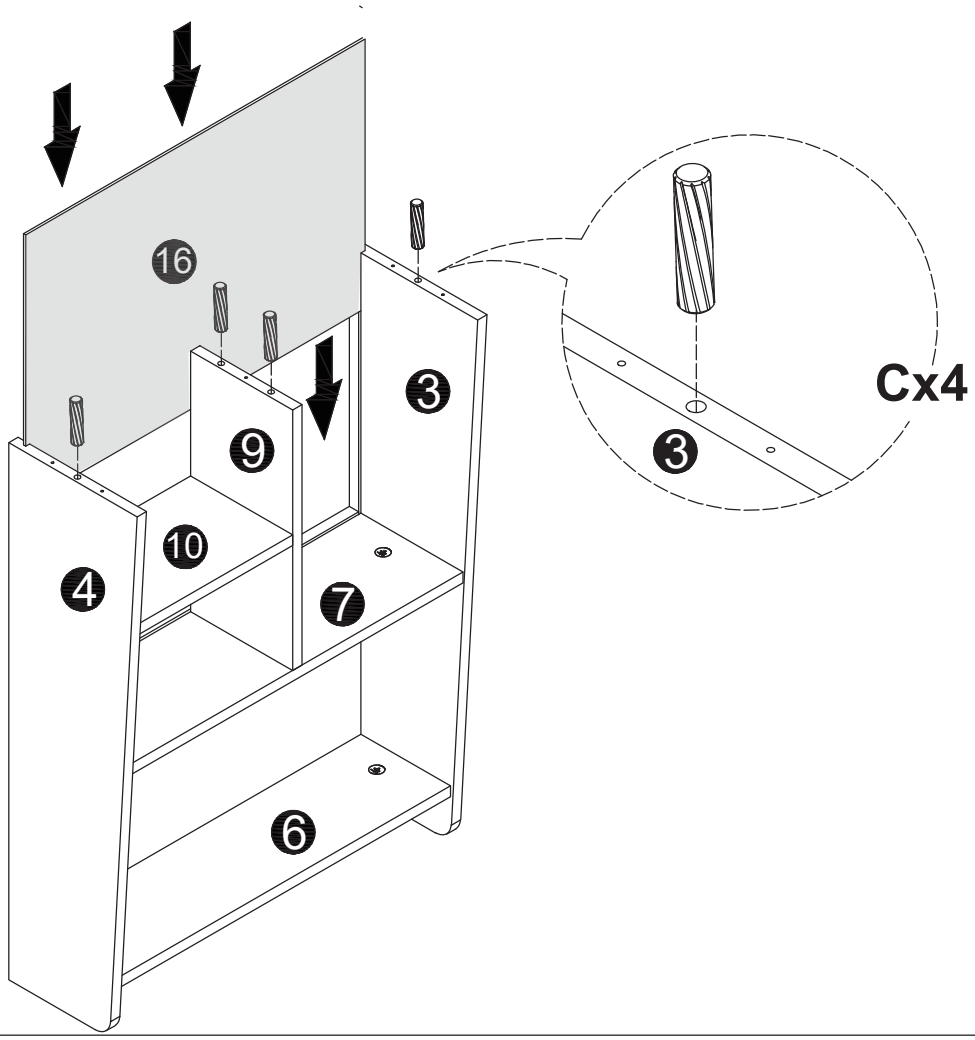


**8**

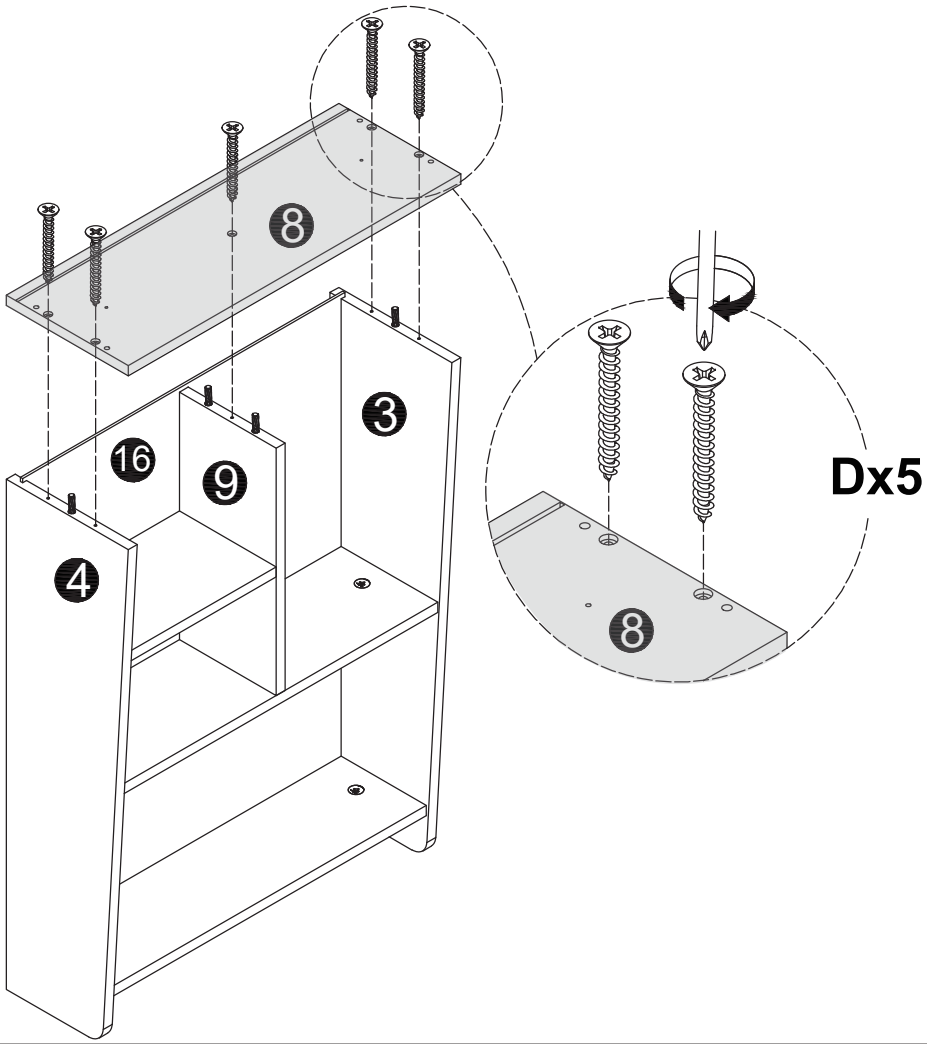

**9**

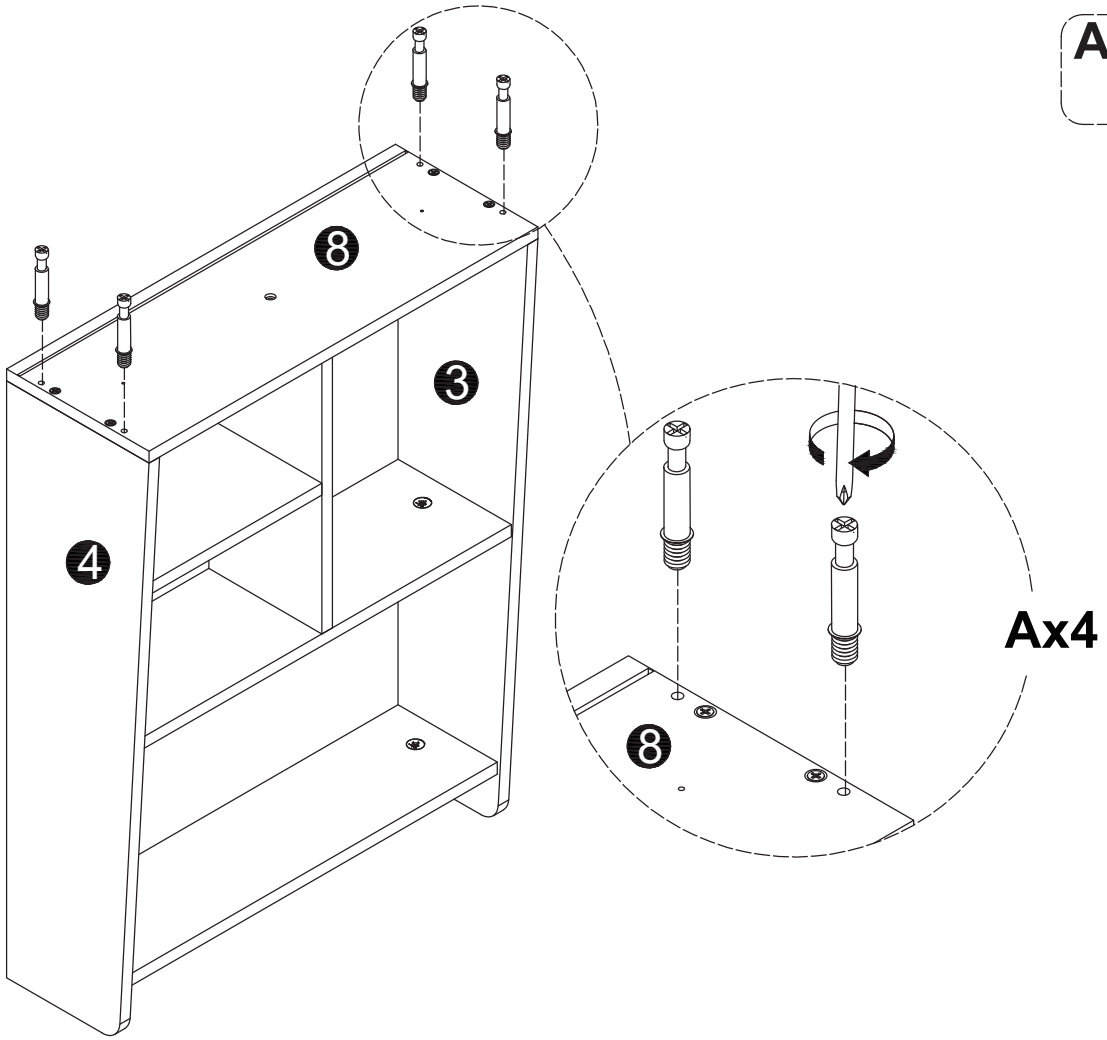


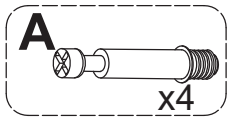


**10**

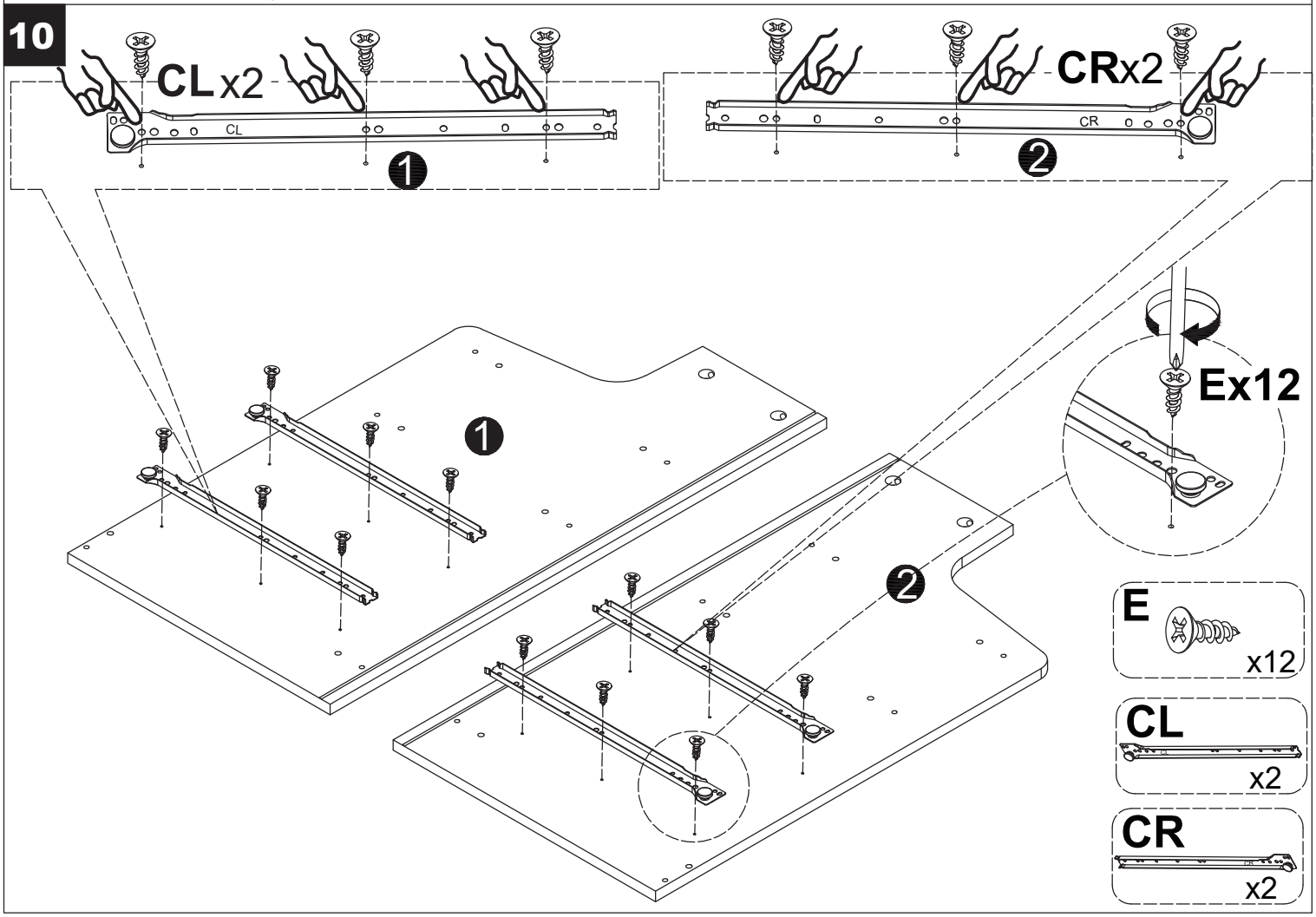

**11**

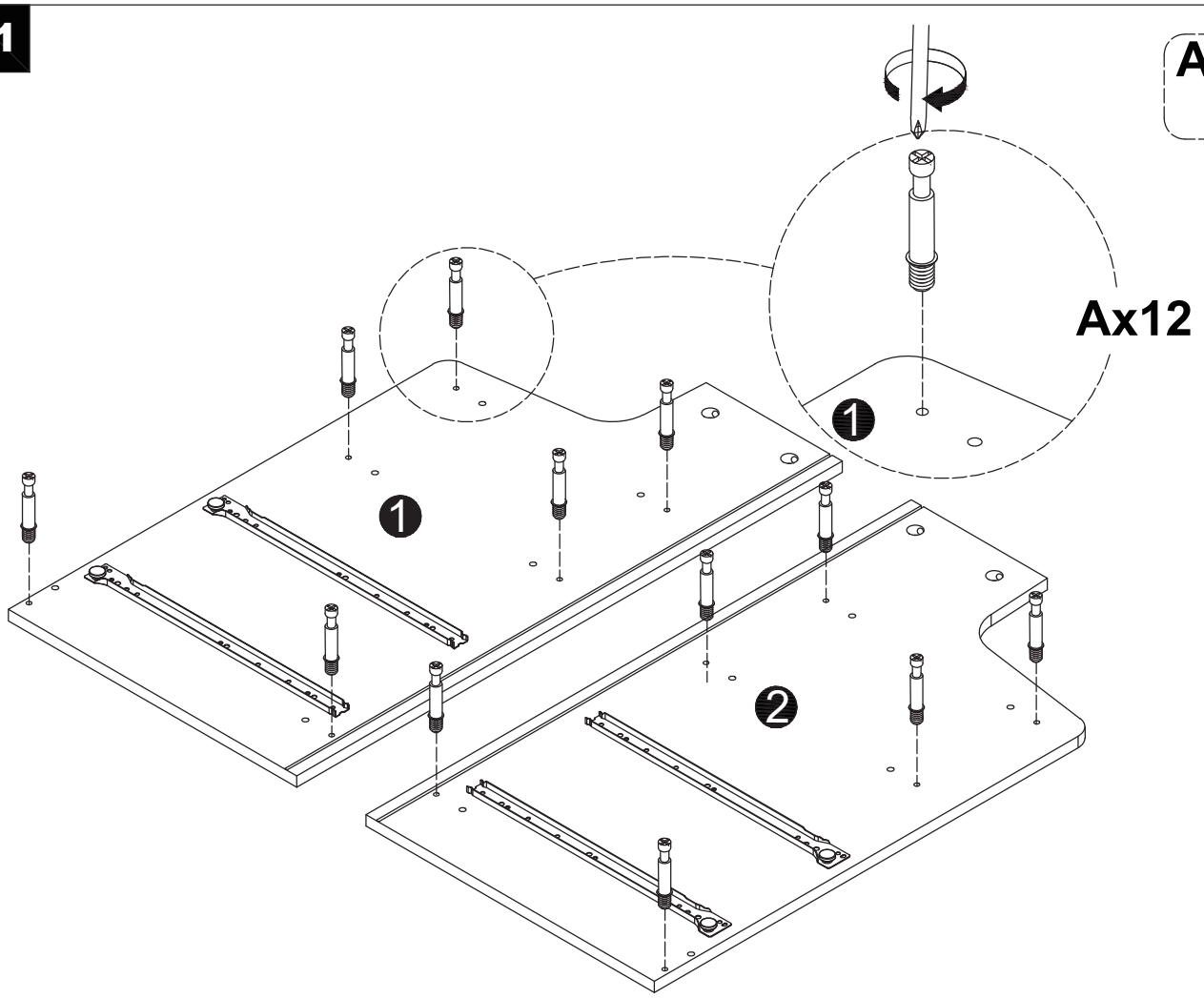


**12**

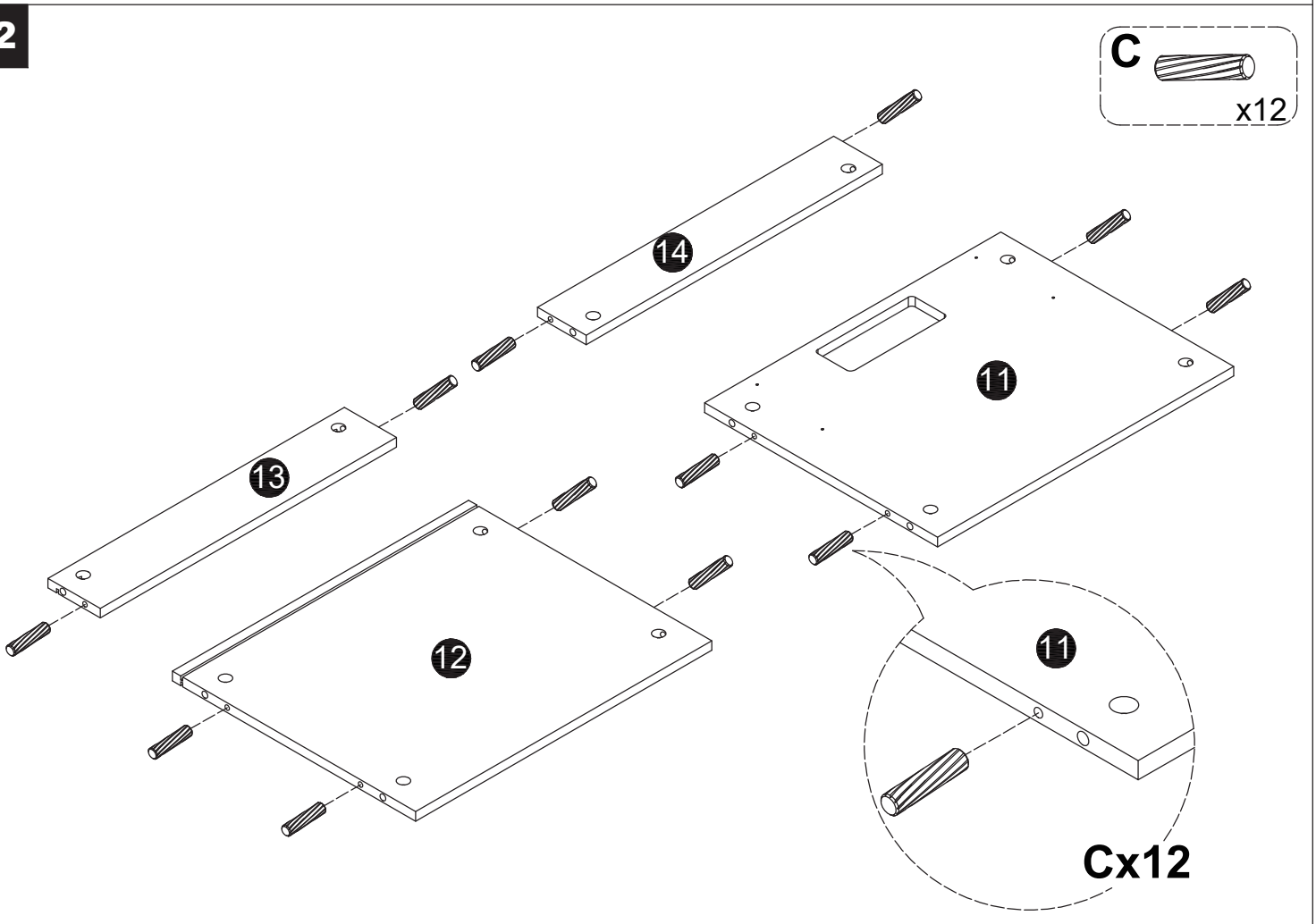

**13** (1)

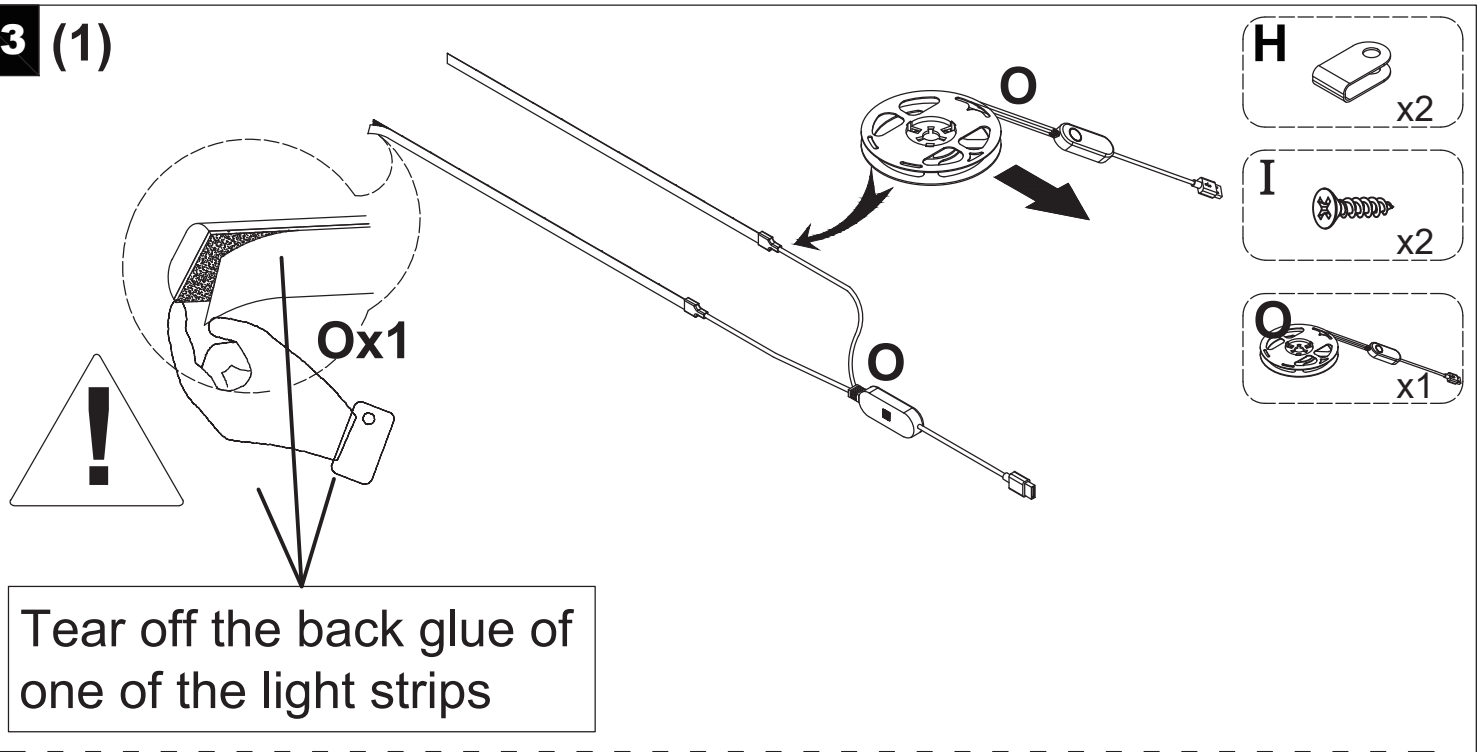


Tear off the back glue of one of the light strips

(2)

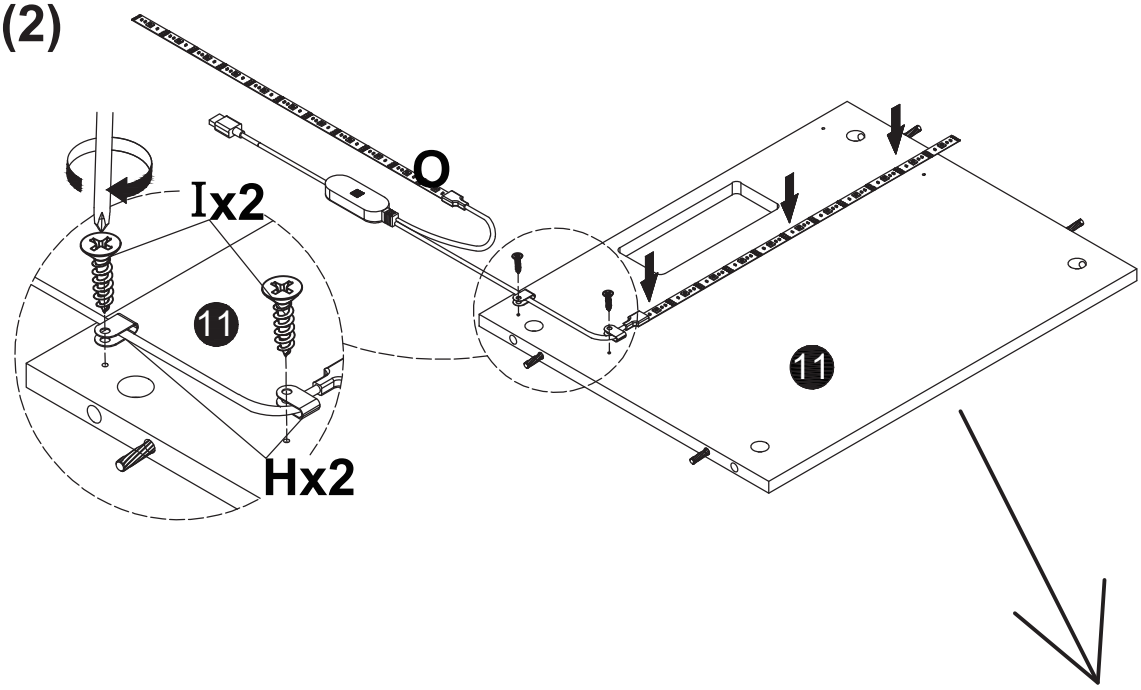


Note: The light bar "O" can be installed on the left or right side, as shown in the figure, it is on the right side

(1)

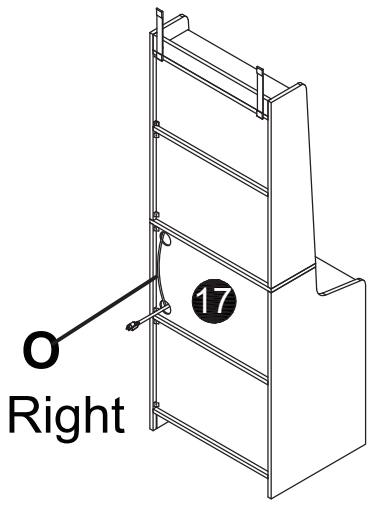


(2)

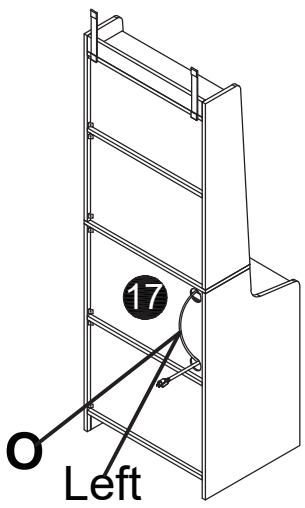

**14**

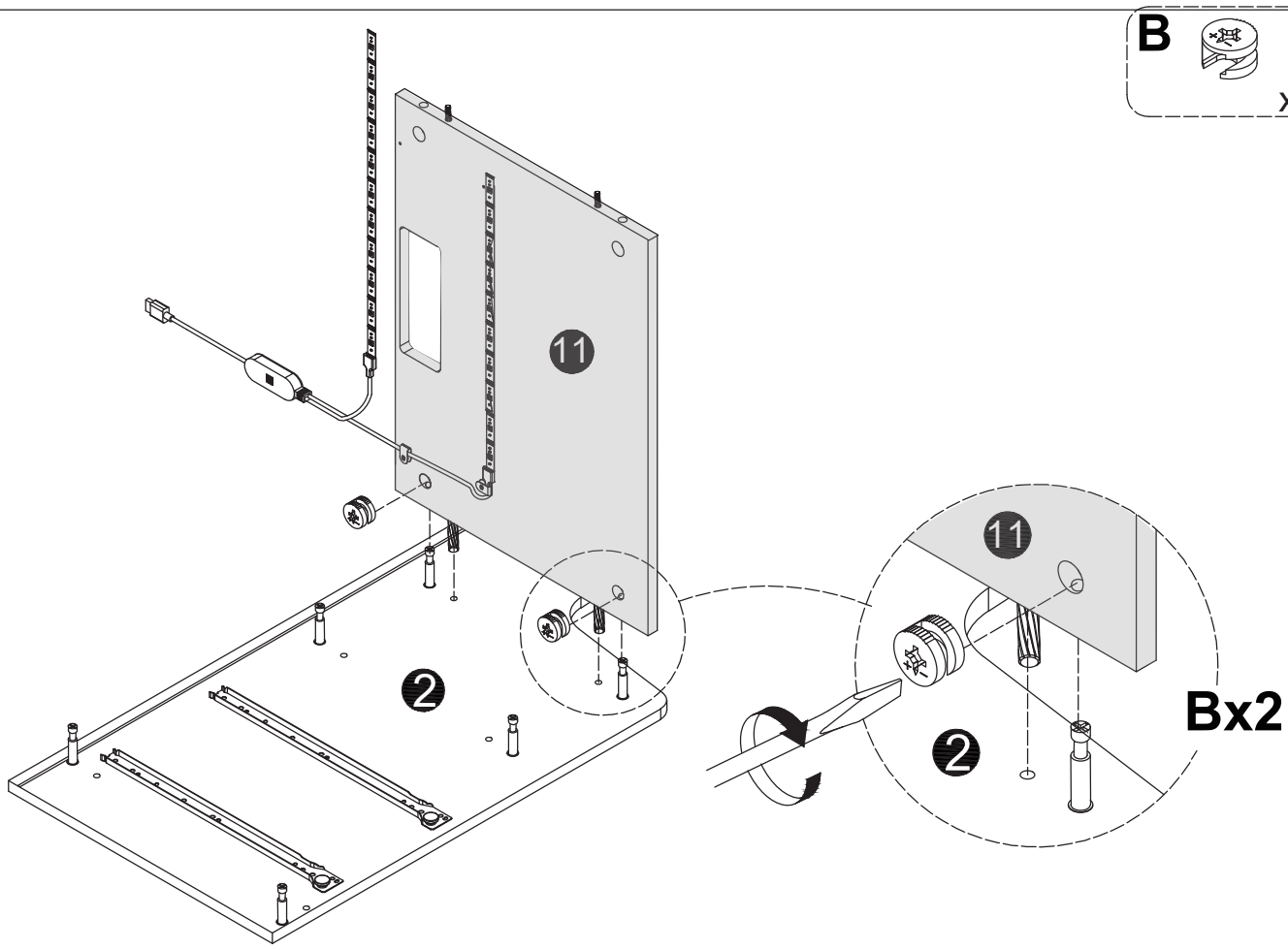


**15**

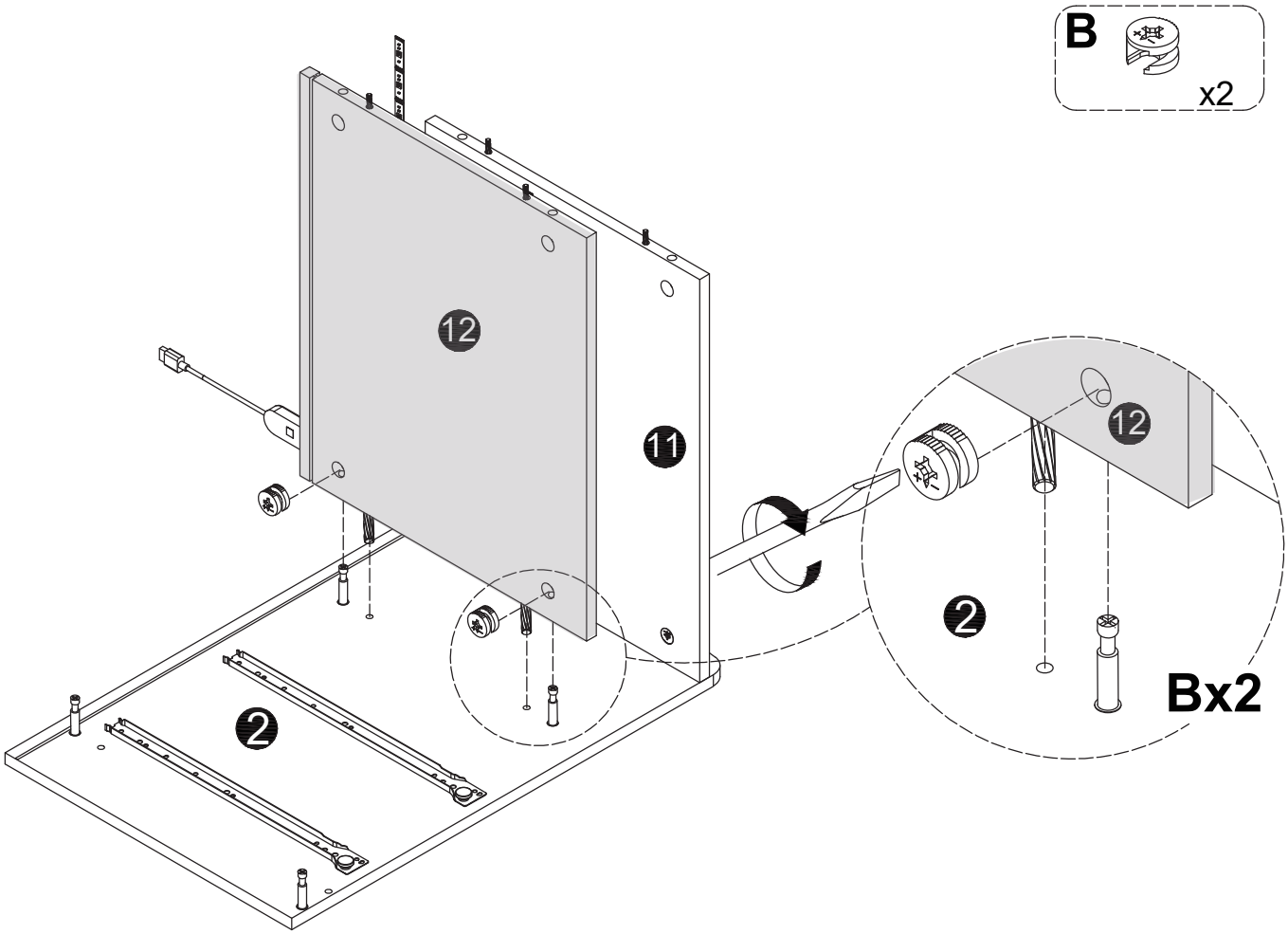

**16**

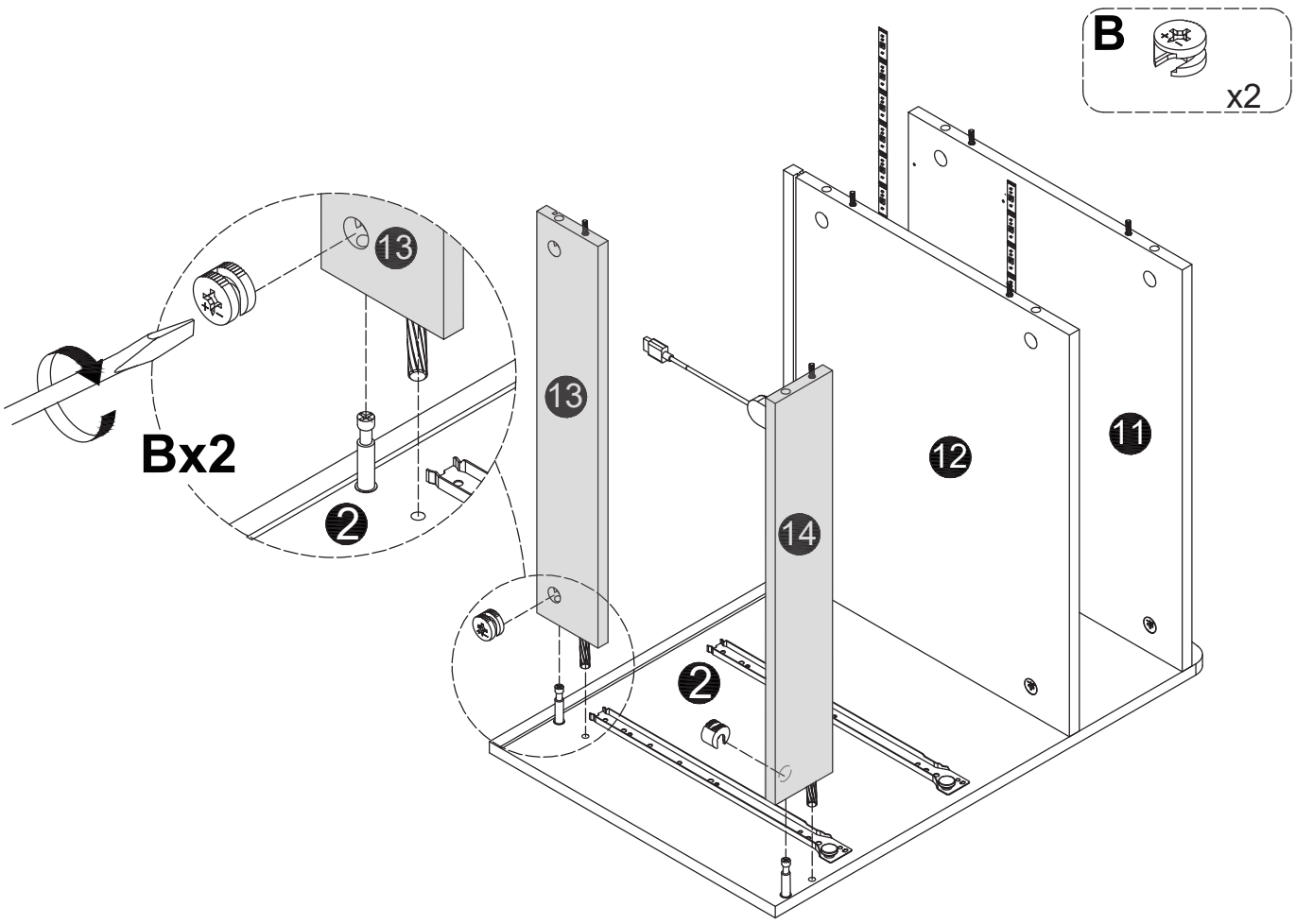


**17**

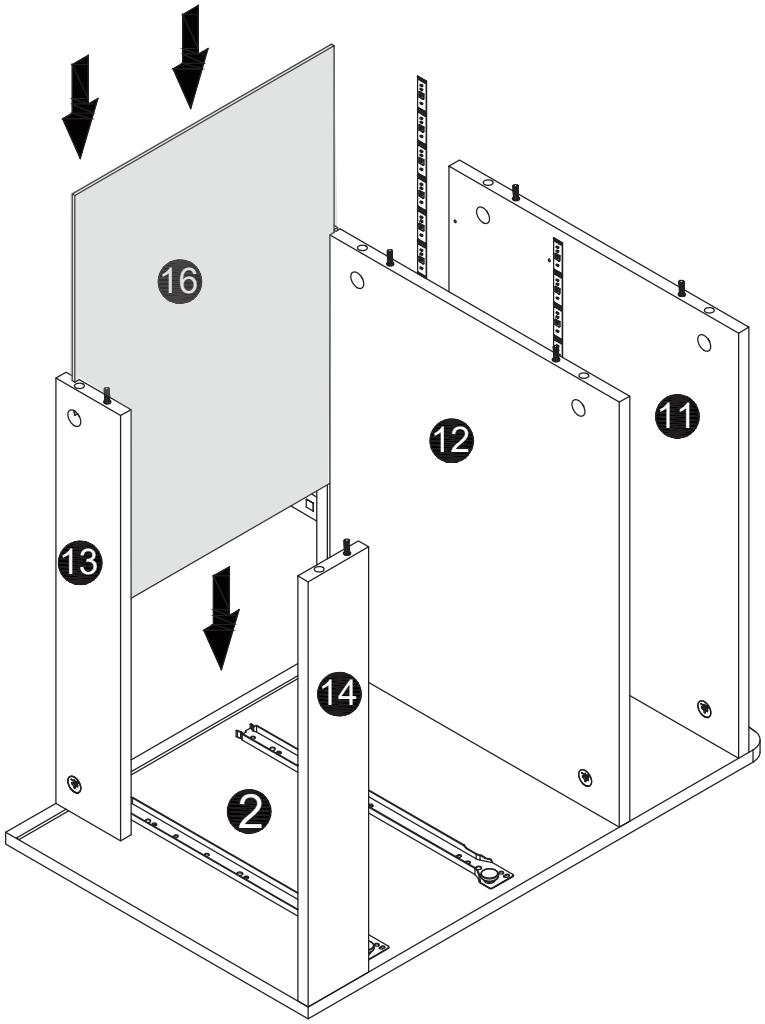

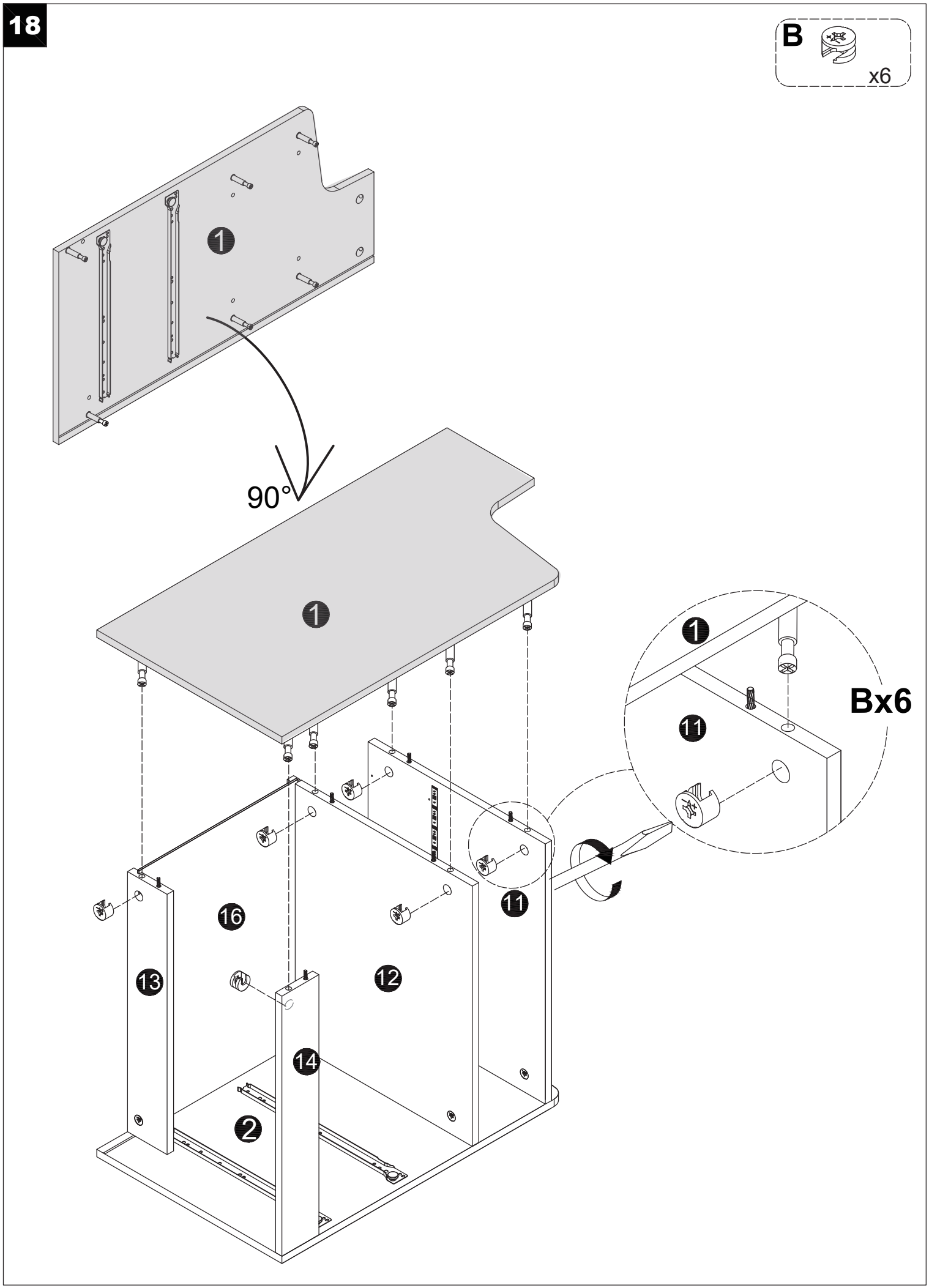
18
B
x6
1
90°
1
1
11
Bx6
11
16
13
12
14
2

**19**

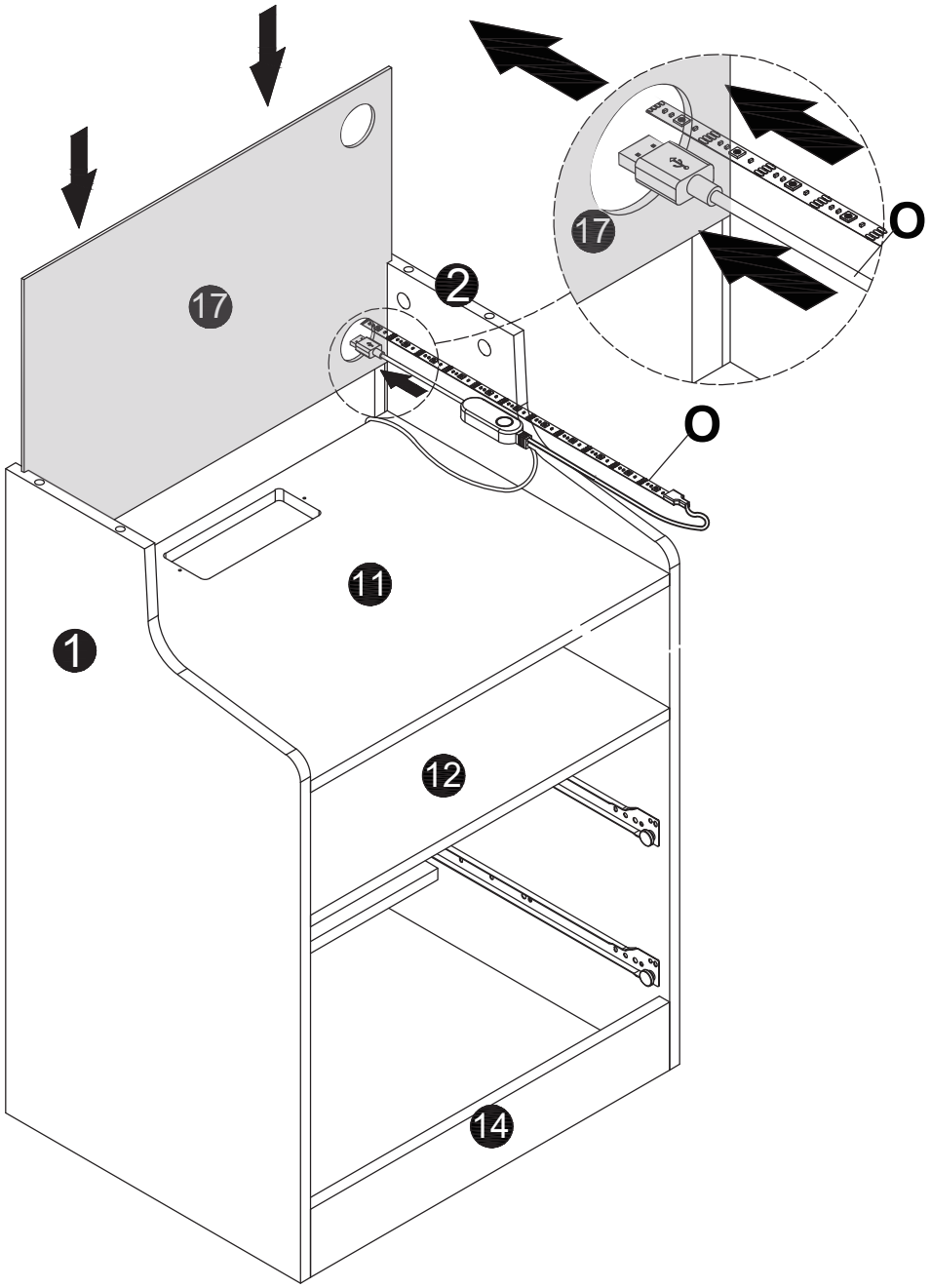

**20** (1)

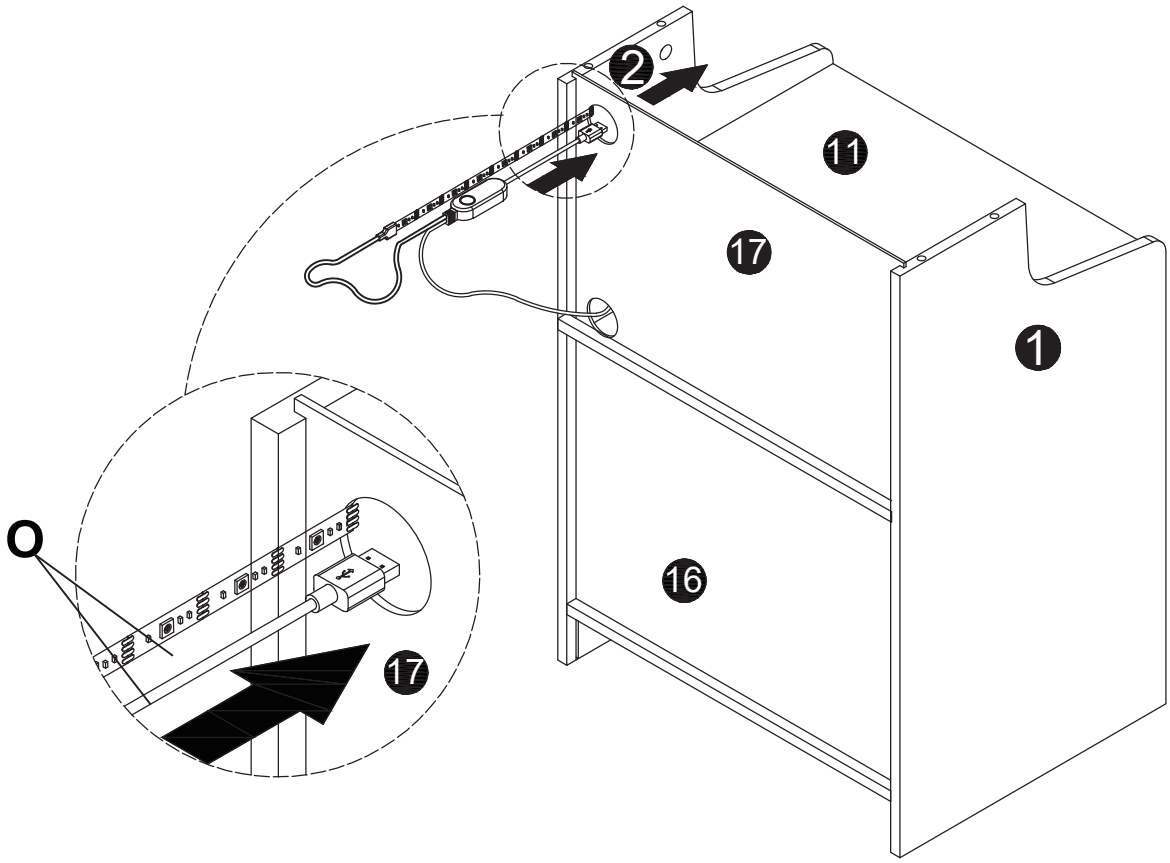


(2)

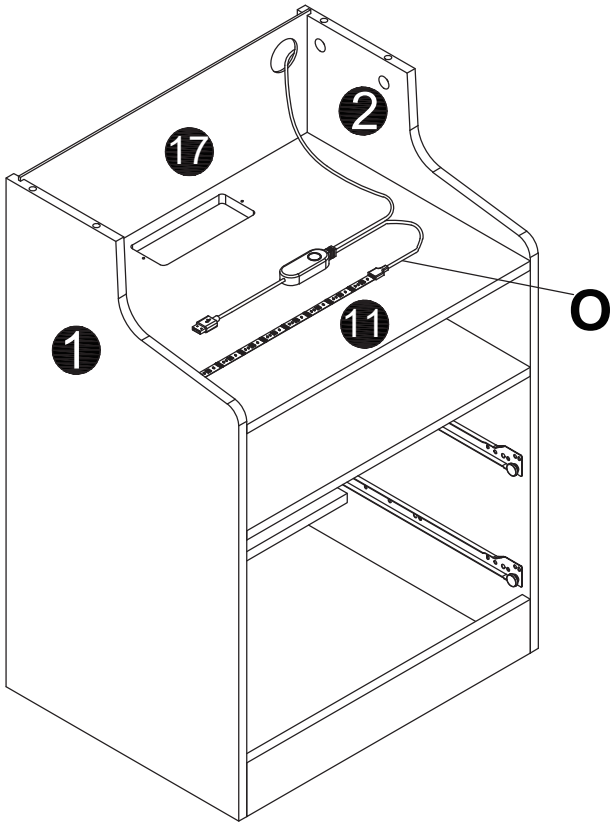

21

(1)

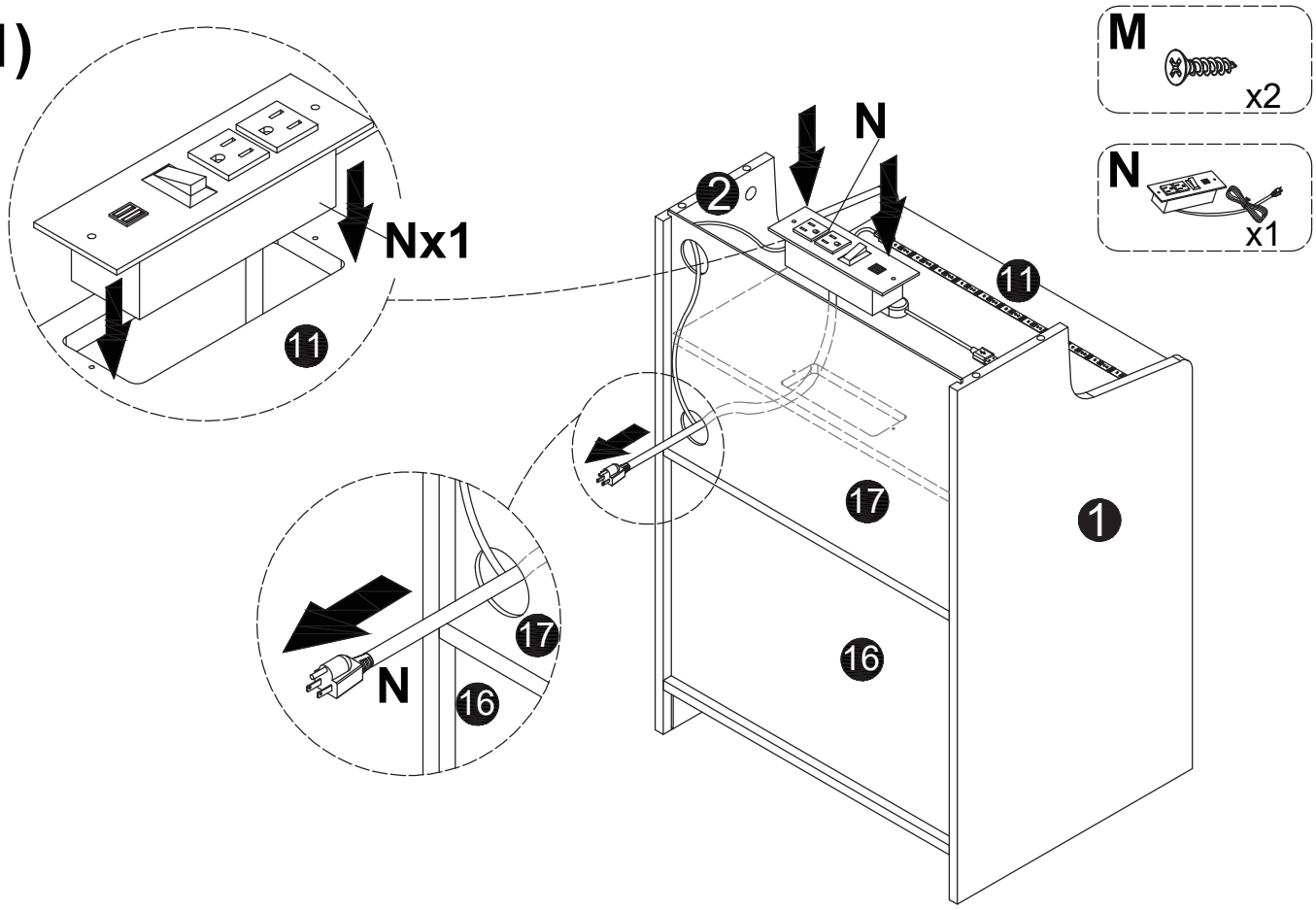


(2)

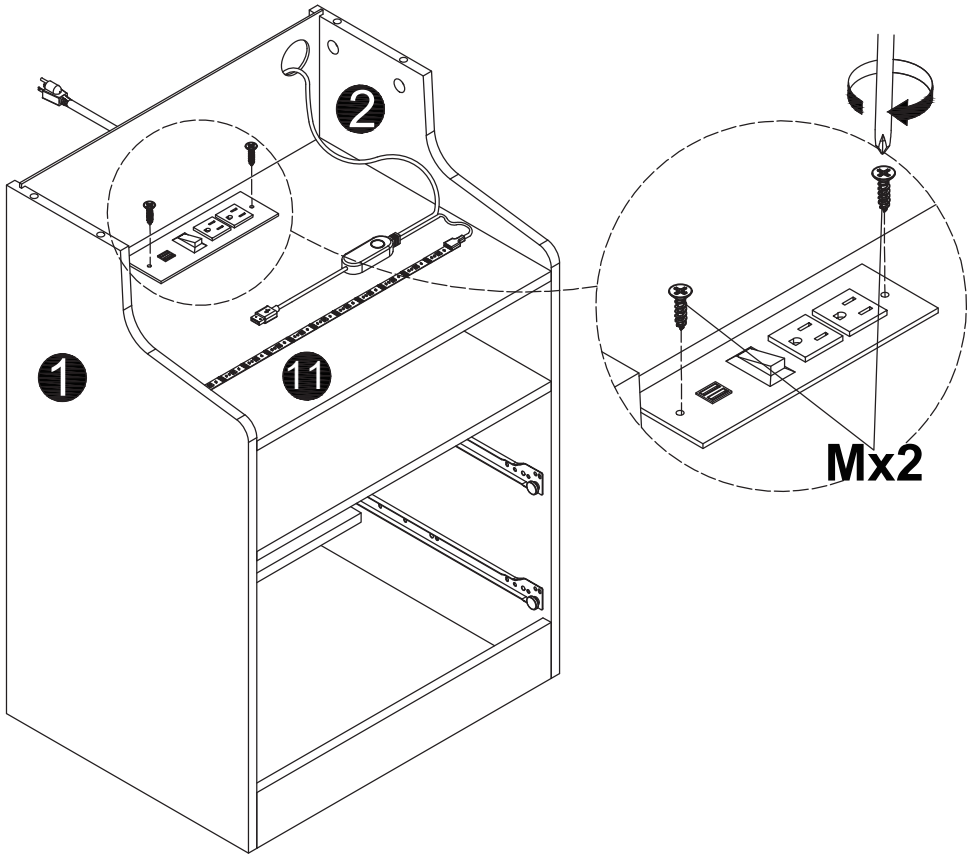

22

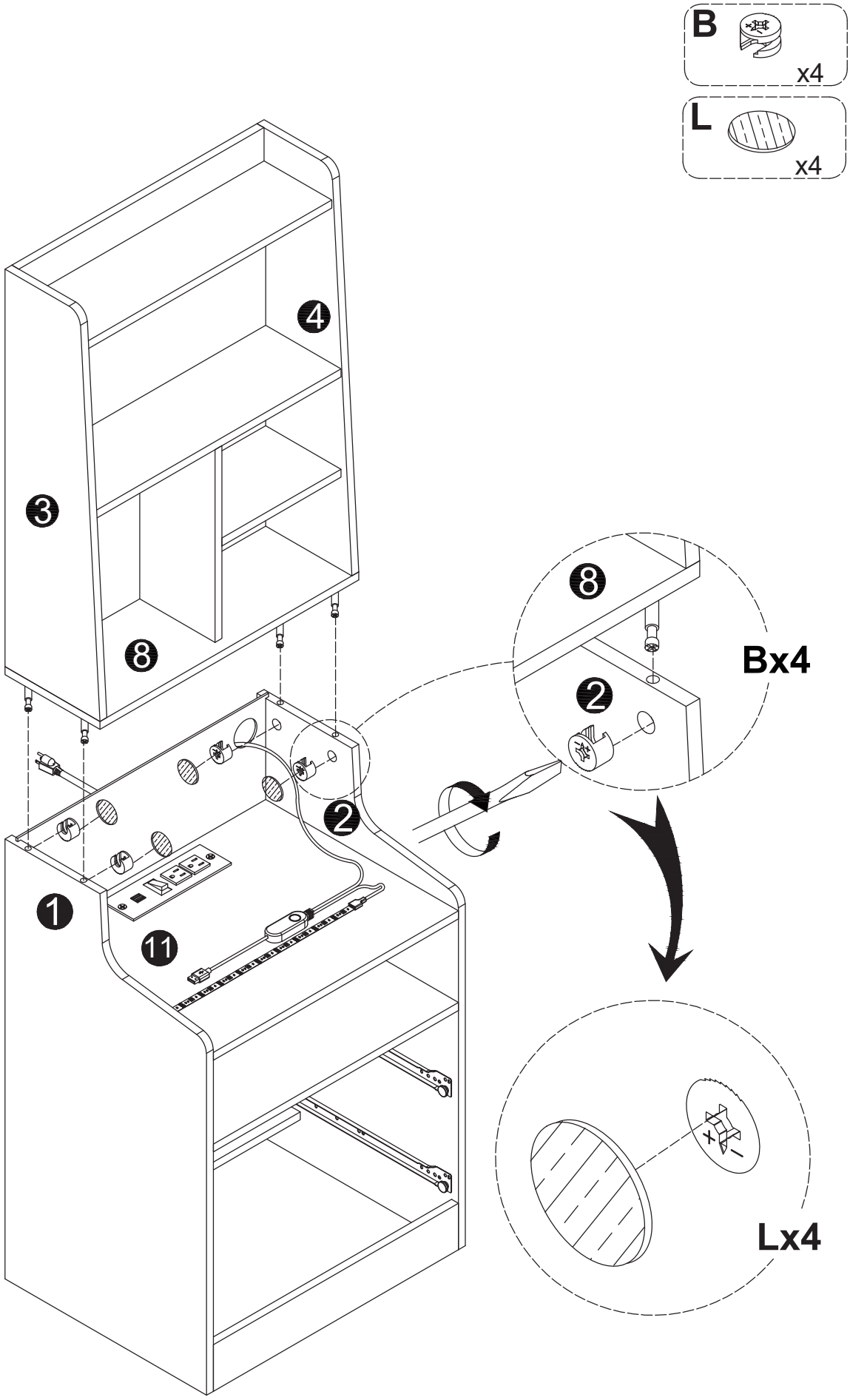

23

(1)

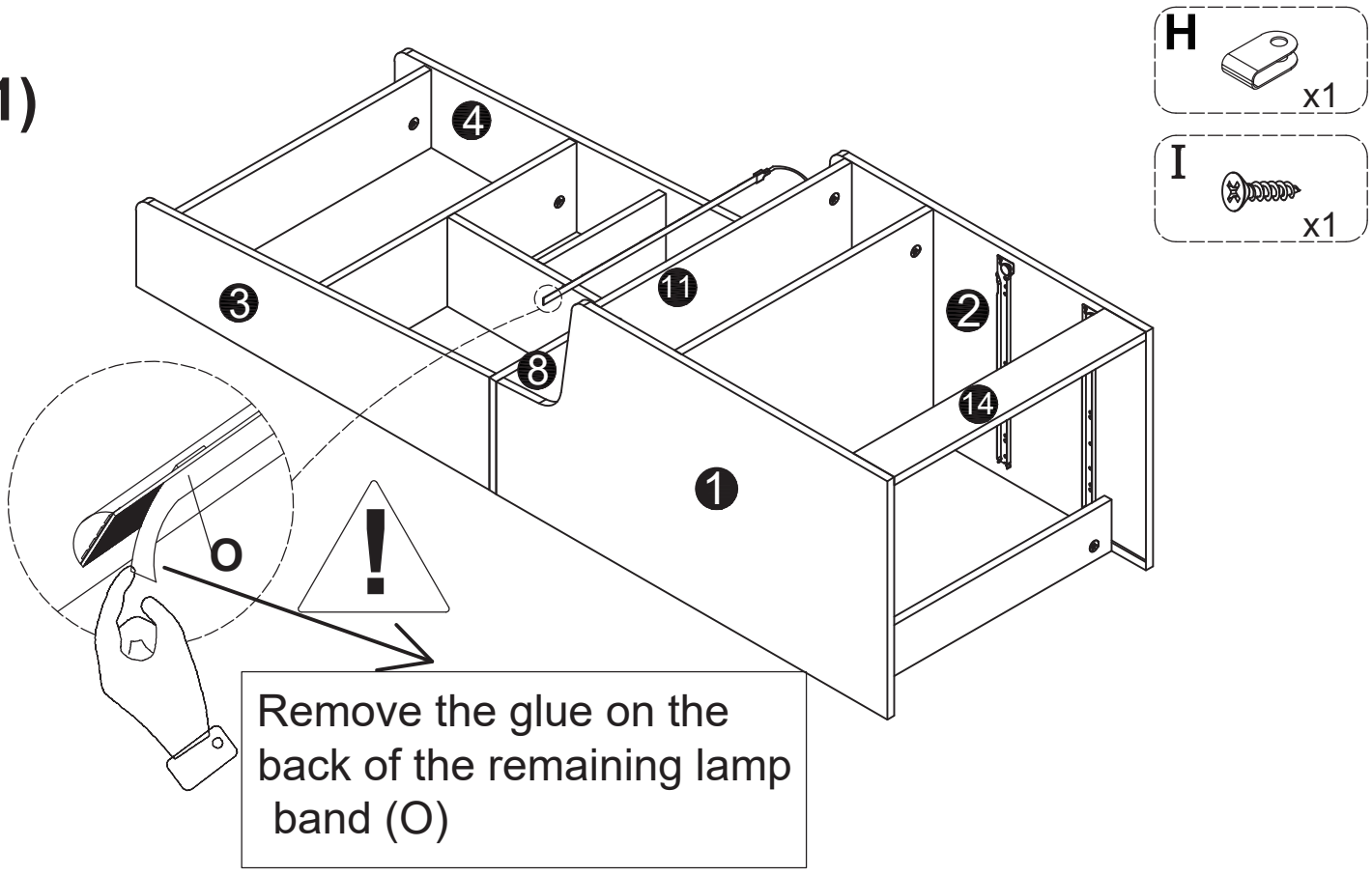
H
x1
I
x1
4
3
11
2
8
14
1
O
!
Remove the glue on the back of the remaining lamp band (O)

(2)

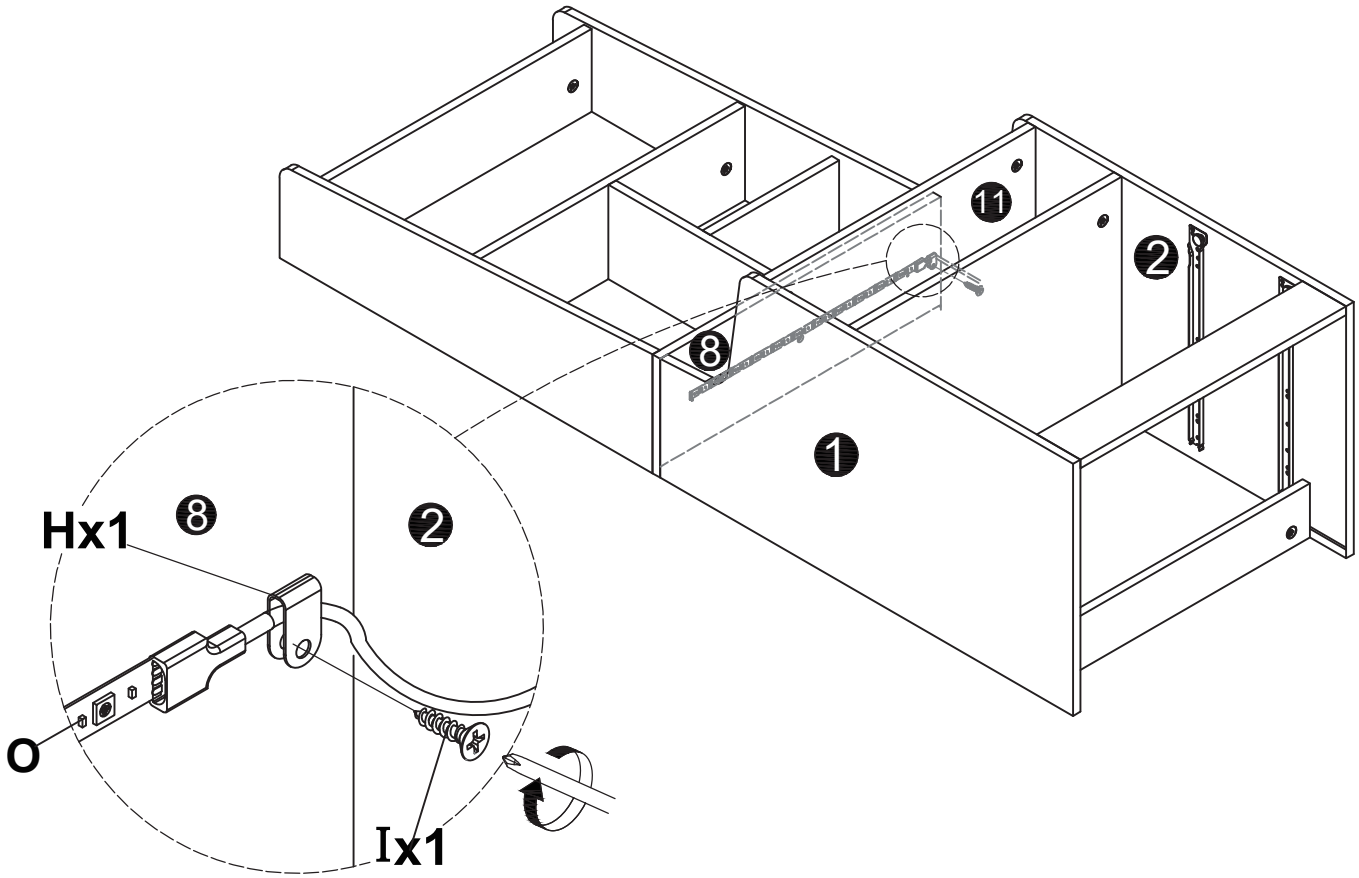
11
2
8
1
Hx1
8
2
O
Ix1

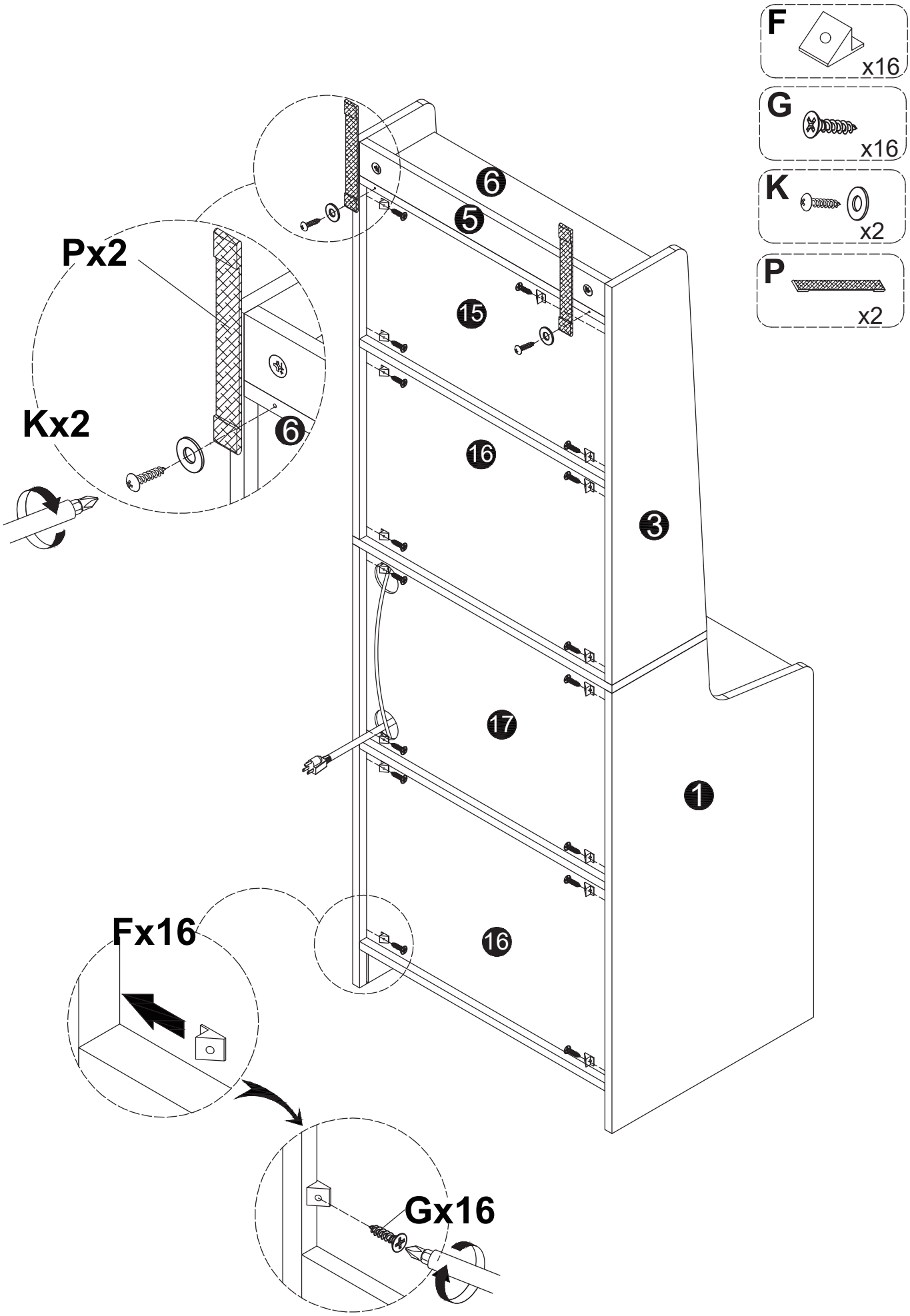
F
x16
G
x16
K
x2
P
x2
Px2
Kx2
6
5
15
16
3
17
1
16
Fx16
Gx16

**25**

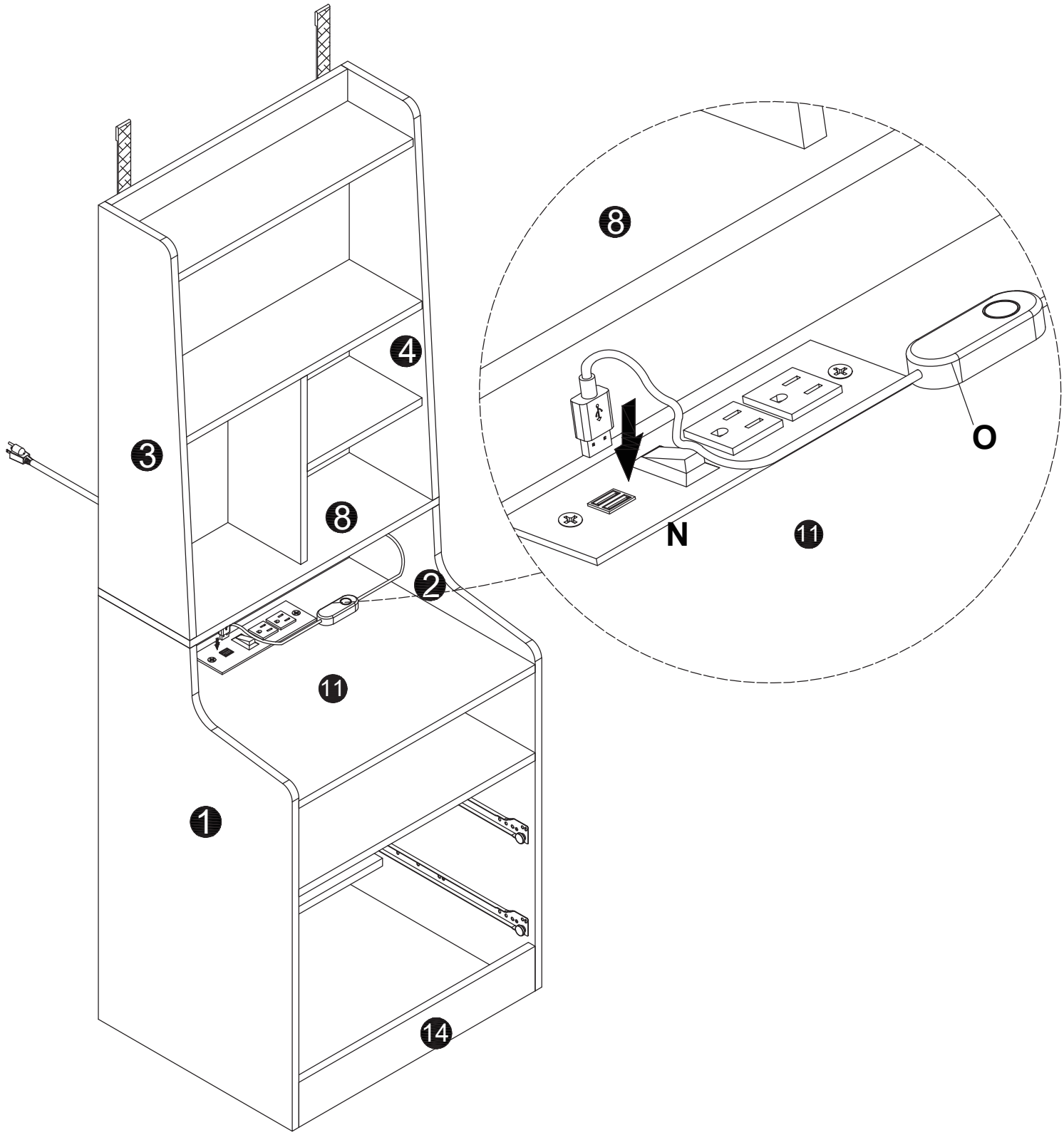

Rest awhile, installing drawers next is a repetitive task
Drawer installation

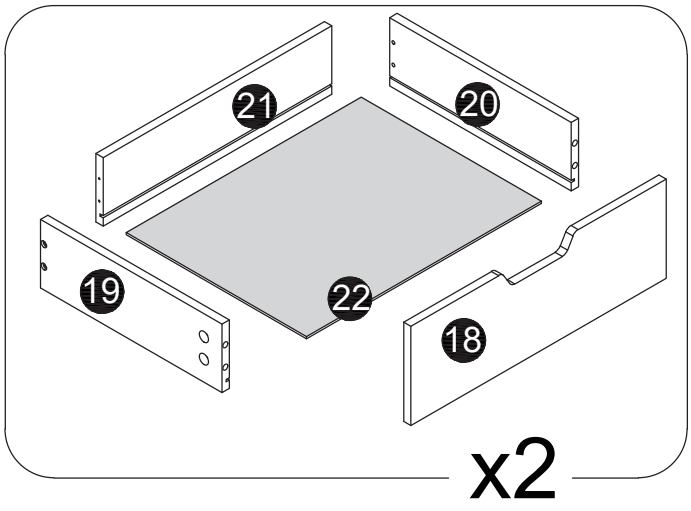


**26** x2

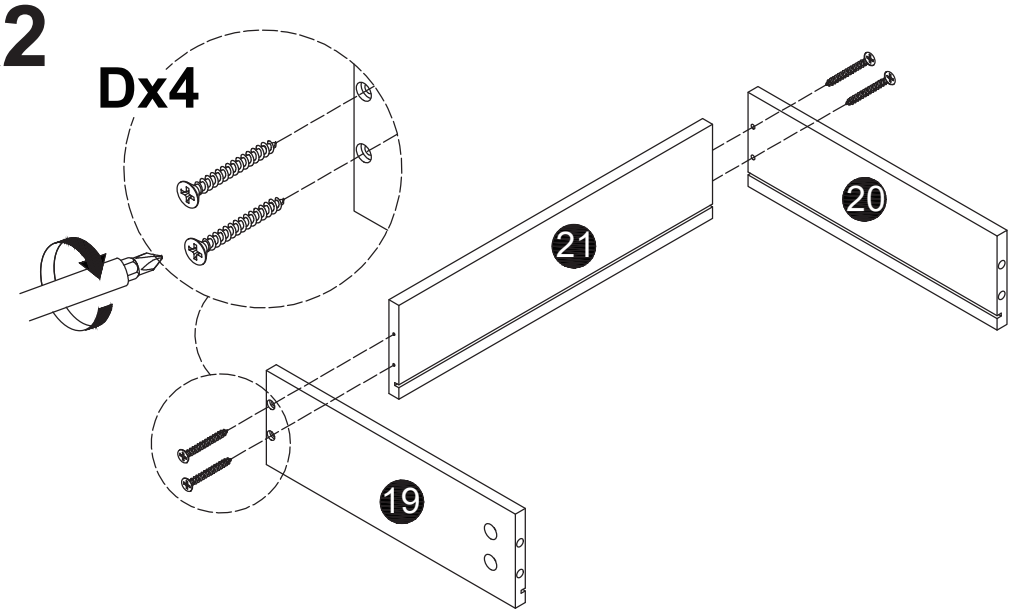


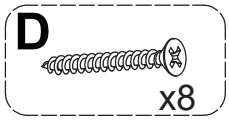


**27** x2

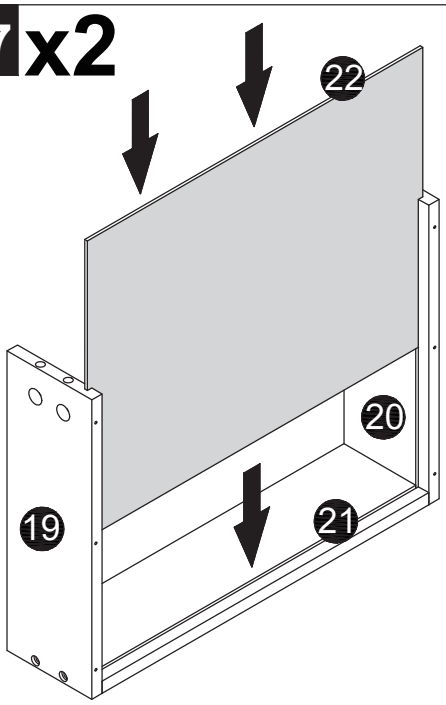


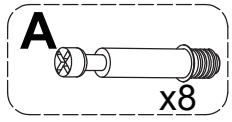


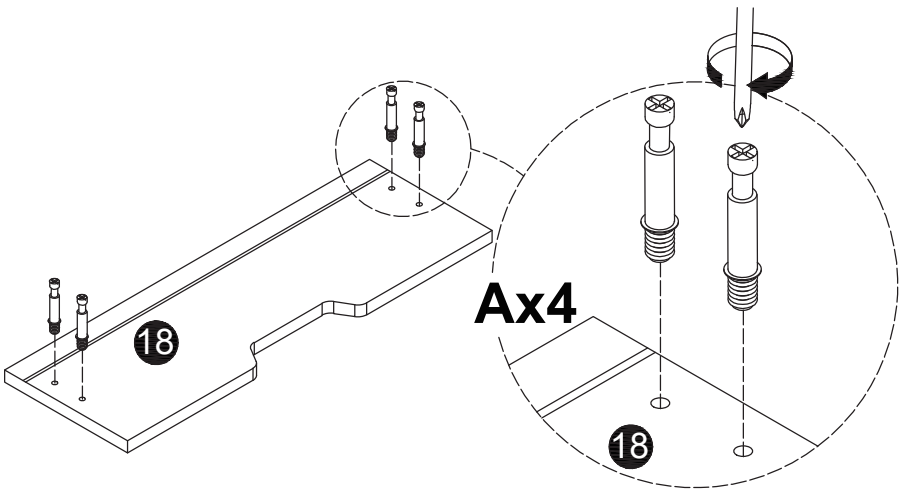

**28** x2

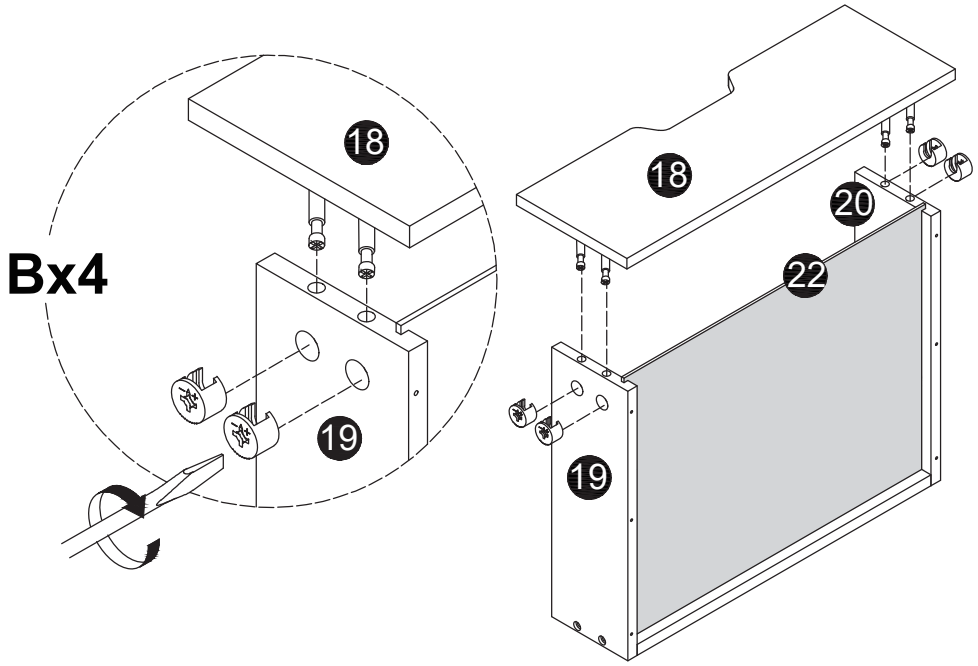


B x8

**29** x2

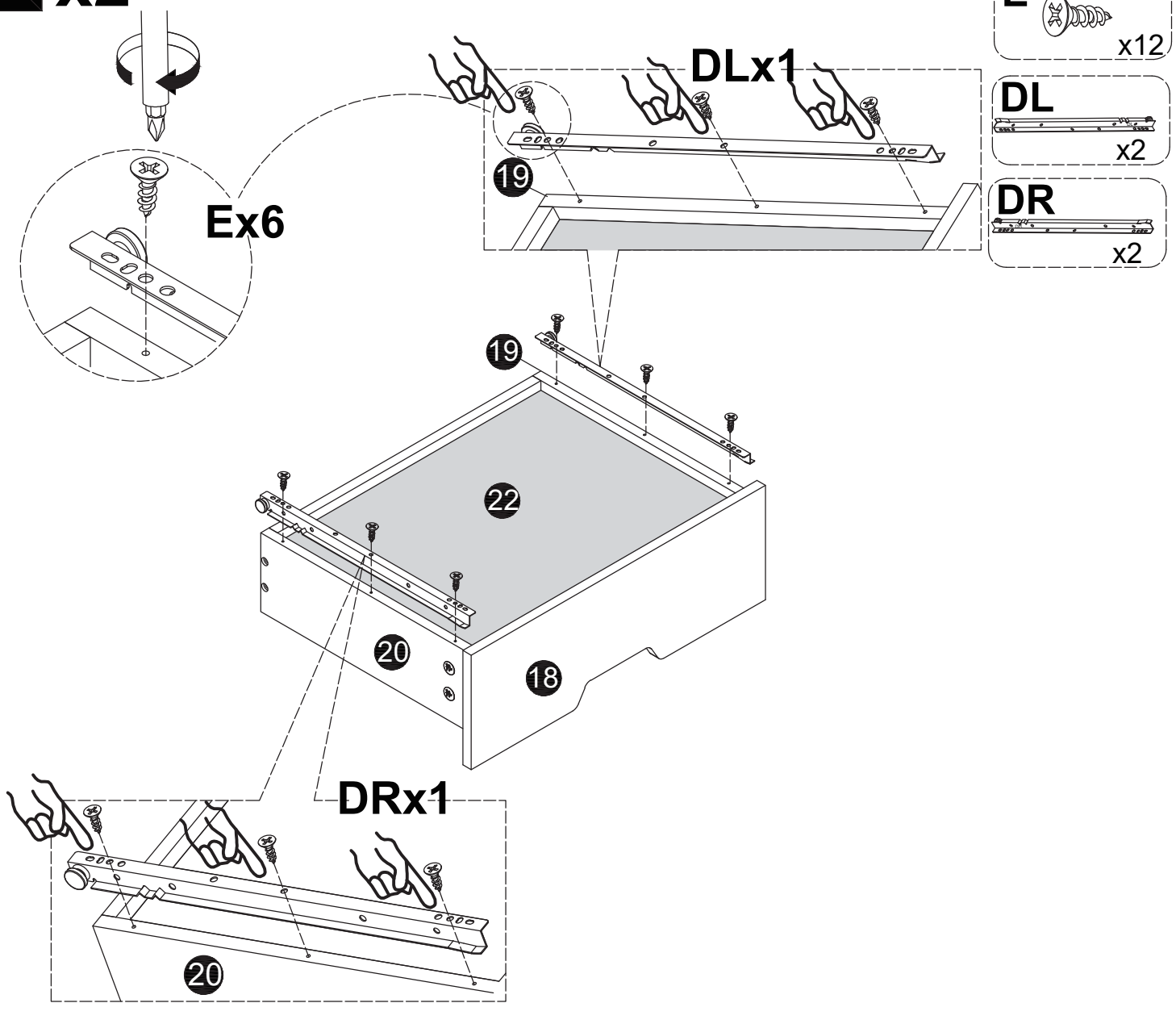


E x12

DL x2

DR x2

**30**

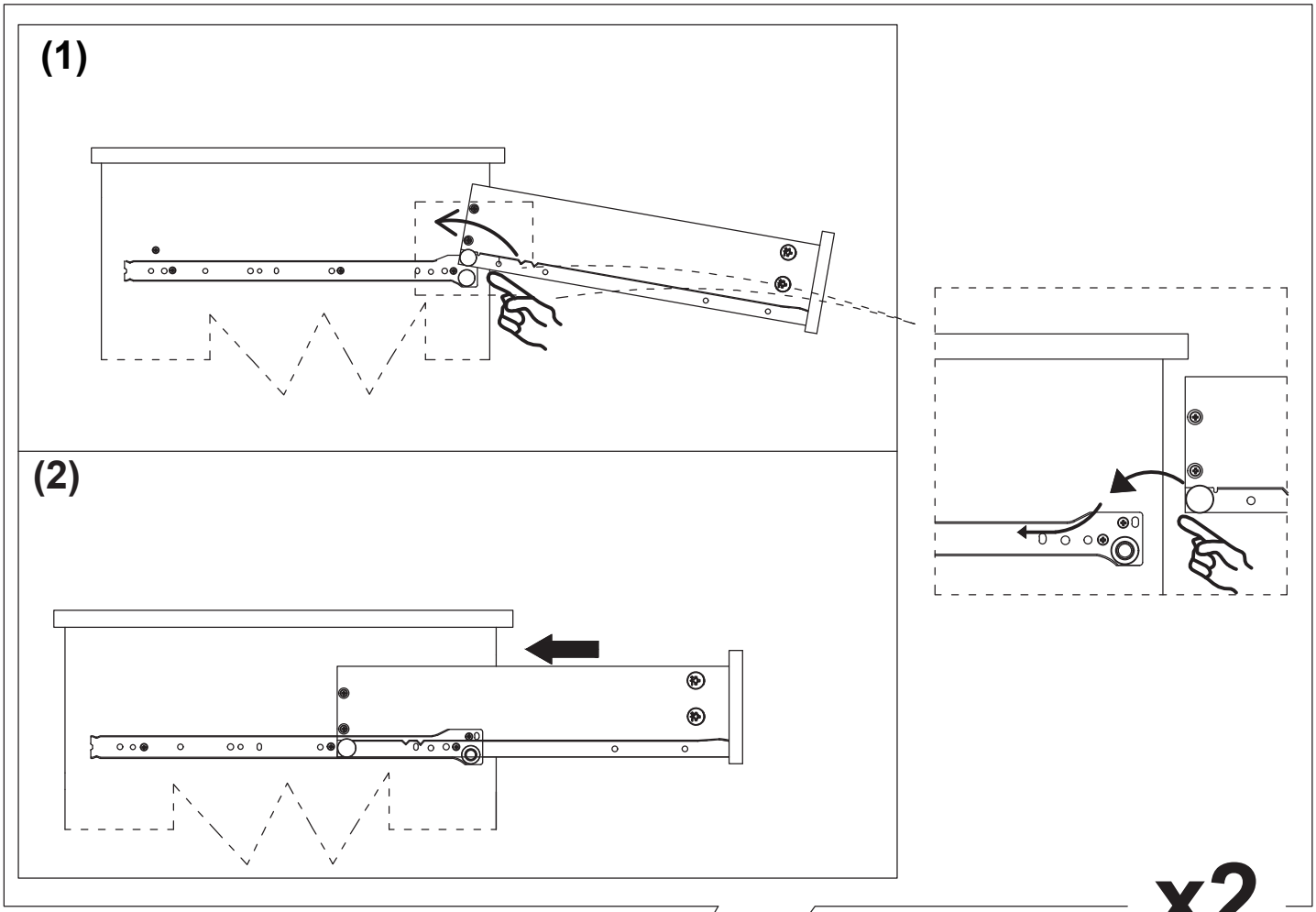


**x2**

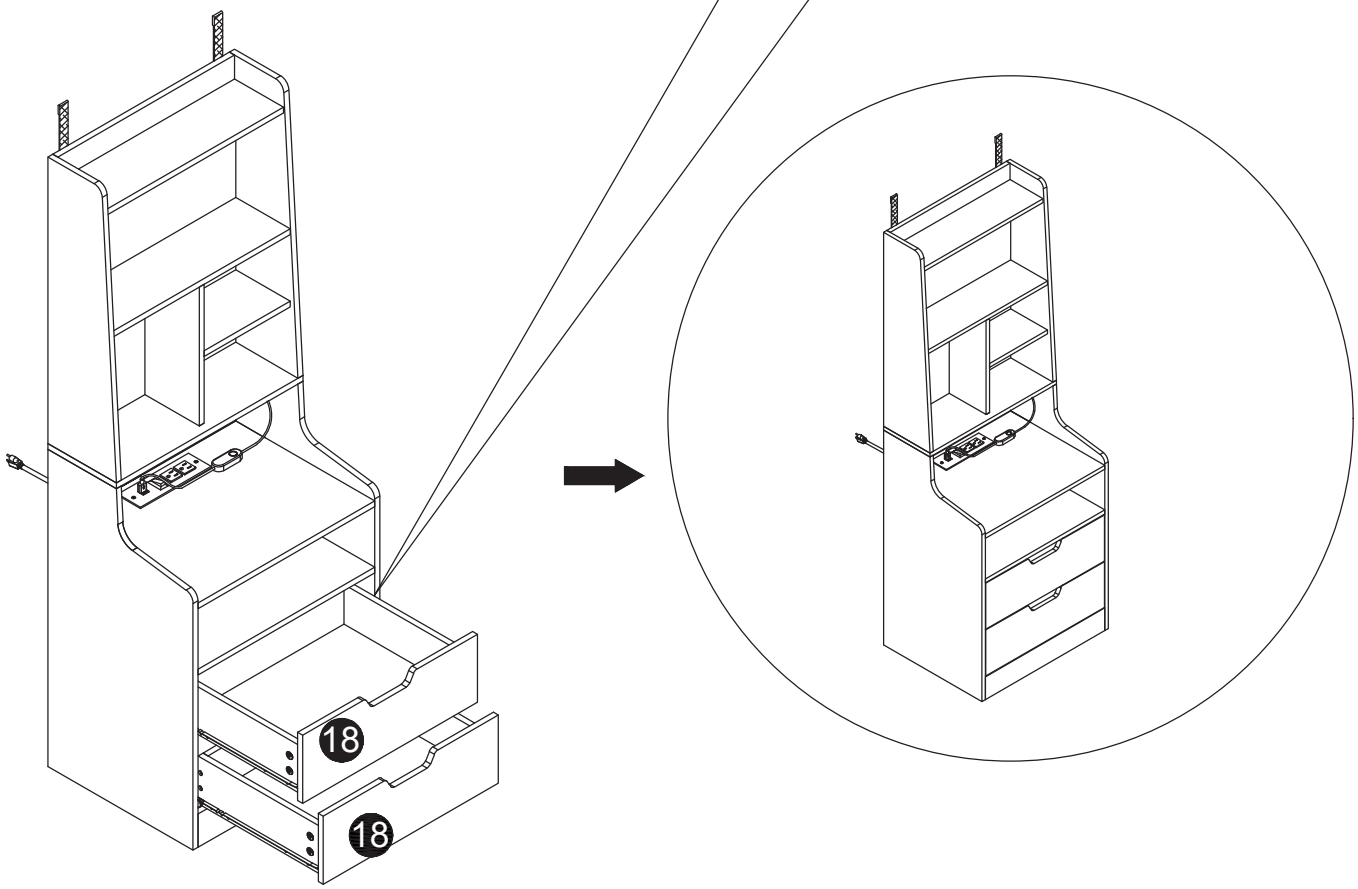

**31**

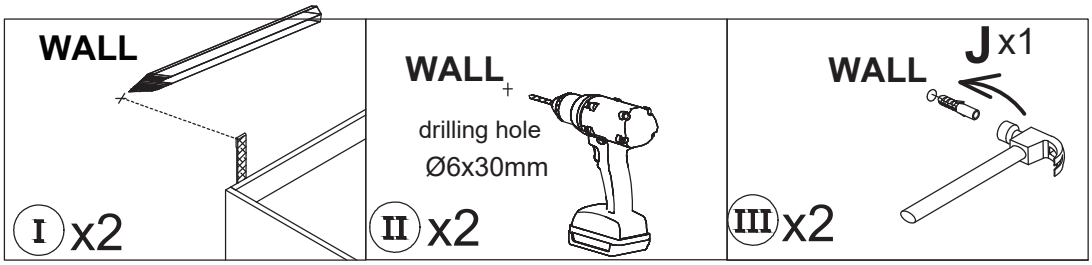
WALL
I x2
WALL
drilling hole
Ø6x30mm
II x2
WALL
J x1
III x2

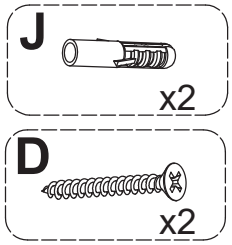
J
x2
D
x2

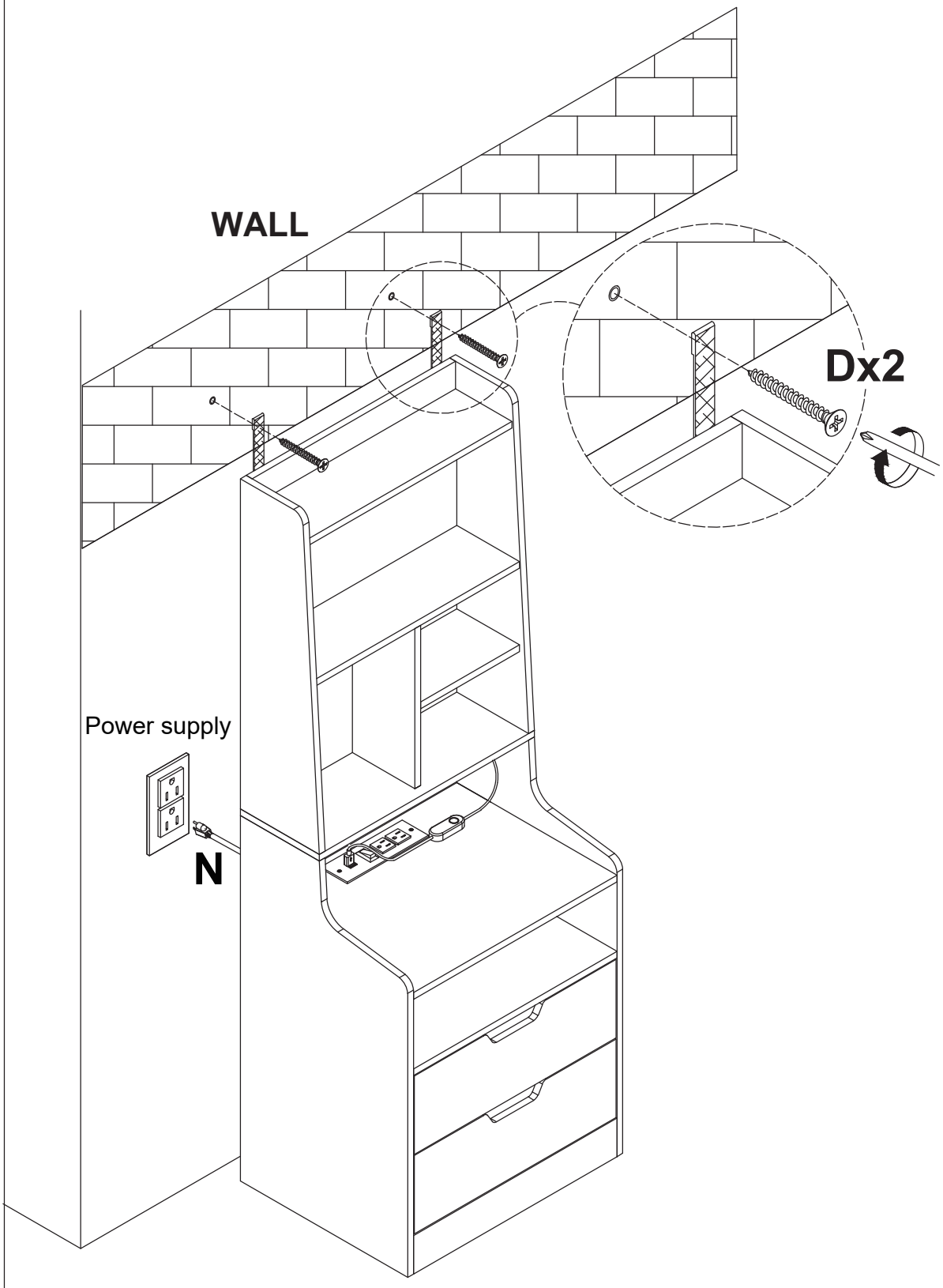
WALL
Dx2
Power supply
N

32

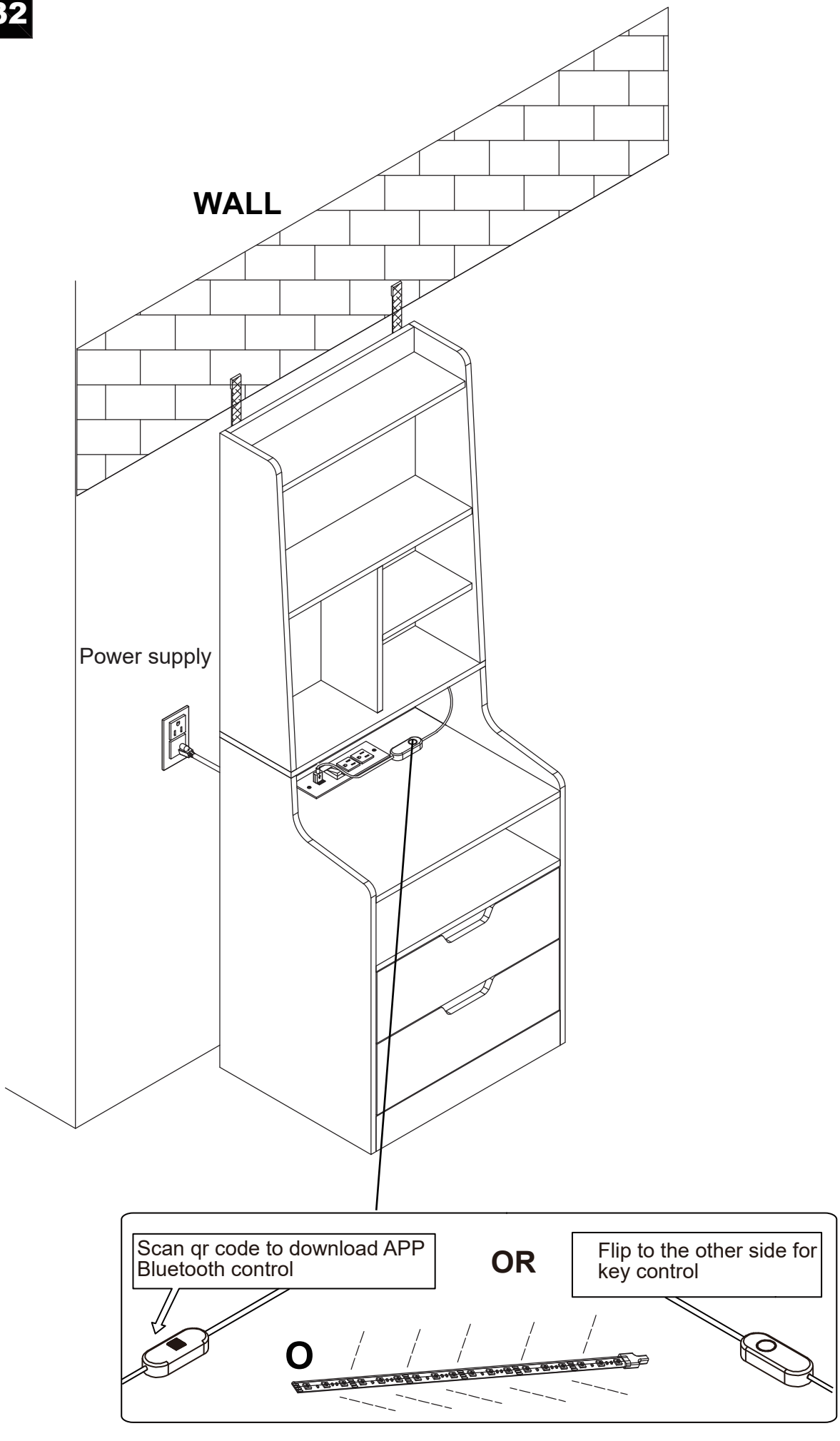
WALL
Power supply
Scan qr code to download APP
Bluetooth control
OR
Flip to the other side for
key control