BUSTER+PUNCH
LONDON

[product.
HERO LIGHT

[type. **CHANDELIER.**]
[knurl. **CROSS.**]
[material. **SOLID METAL.**]
[region. **NORTH AMERICA.**]

Our HERO light is a chandelier made from a 2mm powder coated metal ring, with solid knurled metal detailing. The light pendants can be set in the ring or left to hang through the centre and can be finished with a choice of our light bulbs.

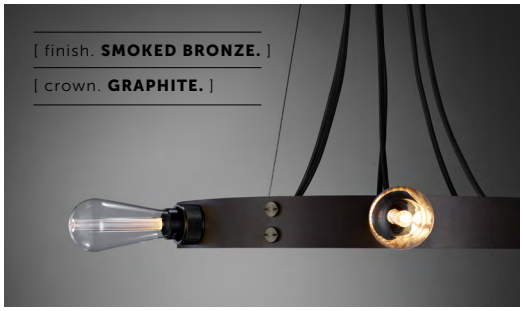

[type. **HERO LIGHT.**]

[info. **MEASUREMENTS.**]

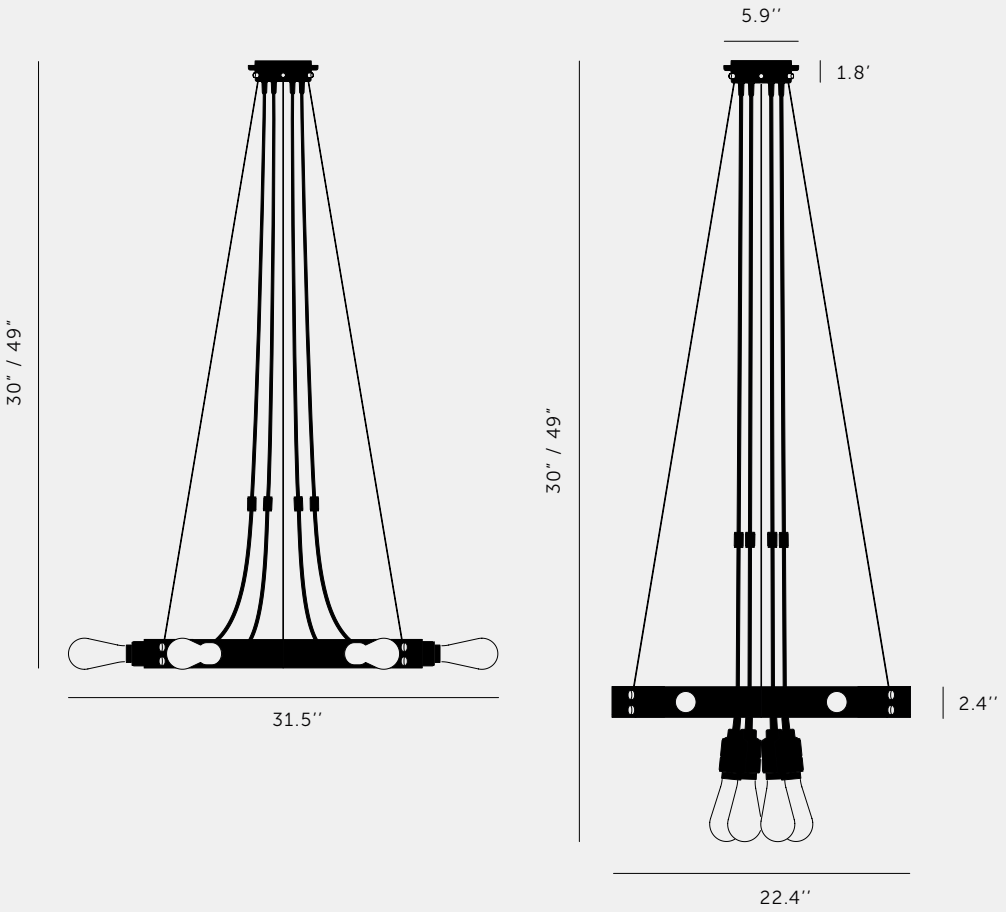

[info. **SPECIFICATIONS.**]

6 x Solid Metal Pendants

E26 SCREW

110-120V~

IP20

20W MAX

Bulbs sold separately

[info. **FINISH & SKU NUMBERS.**]

[length. **30".**]	[sku.]
Stone + Steel	US-HE6-ST-30-SN
Stone + Brass	NHE-252176
Stone + Smoked Bronze	US-HE6-SM-30-SN
Graphite + Steel	NHE-192180
Graphite + Brass	NHE-182184
Graphite + Smoked Bronze	NHE-202178

[length. **49".**]	[sku.]
Stone + Steel	US-HE6-ST-49-SN
Stone + Brass	NHE-252177
Stone + Smoked Bronze	US-HE6-SM-49-SN
Graphite + Steel	NHE-192182
Graphite + Brass	NHE-182185
Graphite + Smoked Bronze	NHE-202179

[info. **ALSO INCLUDED.**]

x3 Steel wire assemblies

x3 Steel wire spare crimps

x6 Crown coin screw

x6 Crown coin nuts

x3 Wire nuts

[info. **CARE INSTRUCTIONS.**]

Wipe with damp cloth with no loose hairs, avoid using any chemicals. Please note all finishes are prone to ageing.

[please. **NOTE.**]

DISCLAIMER: Always consult a trade professional when installing this light. Buster + Punch is not responsible for the usage or feasibility of installation requirements. This product is not suitable for damp or wet environments