ASSEMBLY INSTRUCTIONS

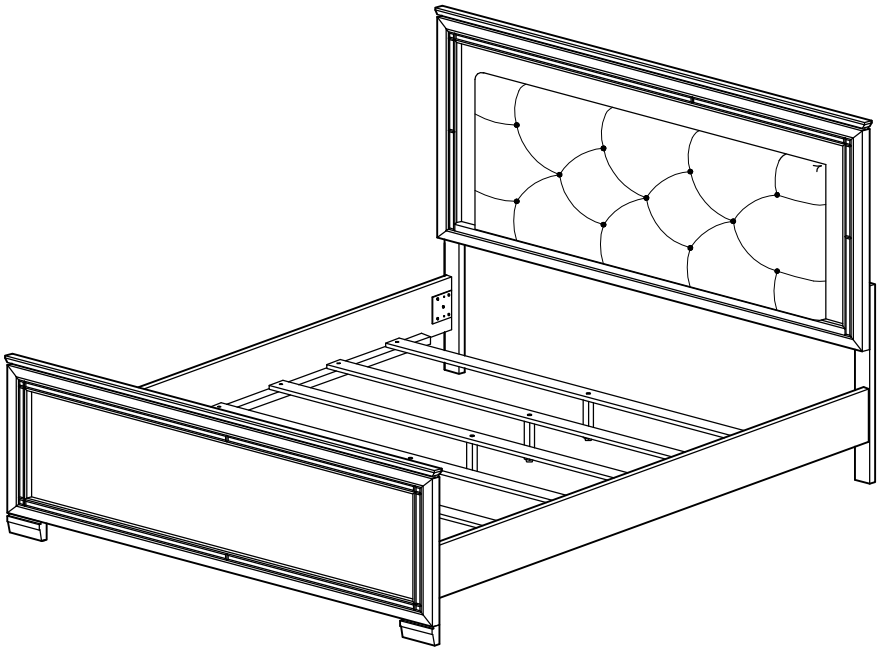

TOOLS REQUIRED

Allen Wrench

(Included)

Philips Screwdriver

(Not Included)

2 - People Recommended

ASSEMBLY RATING

The Assembly Rating is a 5-point system showing the level of effort needed to assemble a specific product.

Thank you for your purchase!

We hope you enjoy this new addition to your home for many years to come.

Our commitment to providing quality products does not simply end when you purchase our product. We fully stand behind our products from start to finish. Our customer service department is available and can help with assembly questions as well as, if necessary, replacing damaged or missing parts. To help expedite our service, please have these assembly instructions readily available, along with your order receipt.

CHECK BEFORE STARTING

☐ **Are you missing anything?**

Double-check all parts, hardware and accessories listed on Page 6 are accounted for.

☐ **Should we send any replacements?**

Are there any irregularities or flaws in the parts? We can send replacements!

☐ **Check out our Quick Tips!**

We recommend reviewing the pre-assembly handouts. Even experts need a refresher now and then!

☐ **Prep Time!**

Please review the assembly instructions and all diagrams prior to assembling. Arrange parts as recommended on Page 7 and group identical hardware together to make assembling easier.

PRE ASSEMBLY INTRODUCTION

We understand building ready-to-assemble furniture can be a challenging experience for some. To help avoid confusion, we have provided some helpful tips that may speed up the process.

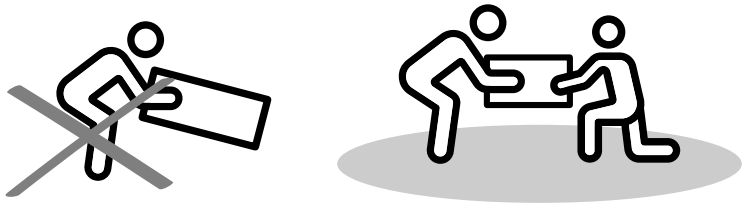

Teamwork

ALWAYS have at least two people to help with transporting and assembling the product to avoid potential injury and/or damage.

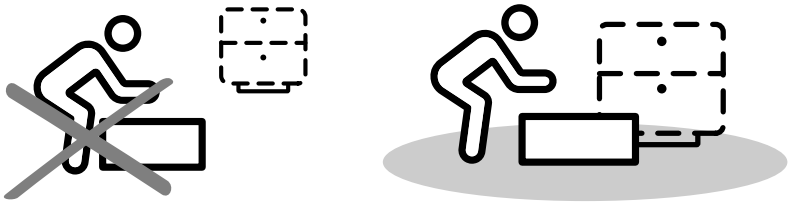

Suitable Location

Assembling near the area of the intended location is highly recommended.

Sufficient Space

Make sure you have enough space to move around during the assembly.

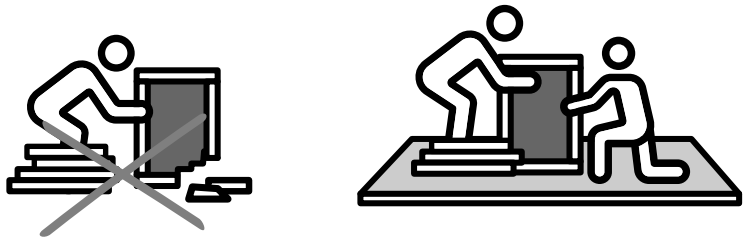

Avoid Scratches

Use cardboard, blankets or a carpeted area while assembling furniture to prevent scratches.

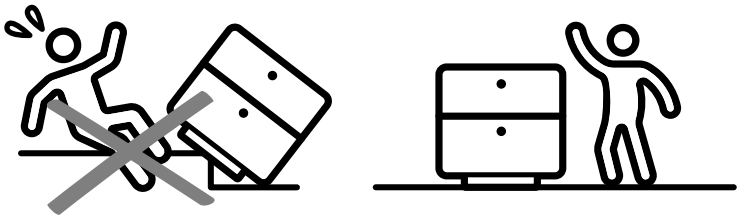

Flat Surface

Make sure the furniture rests on a flat and level surface with each leg evenly touching the floor.

ASSEMBLY AND CARE ADVICE

FAILURE TO FOLLOW THE GUIDELINES BELOW MAY RESULT IN INJURY AND/OR PROPERTY DAMAGE.

Position each part correctly and insert screws or bolts into their respective holes.

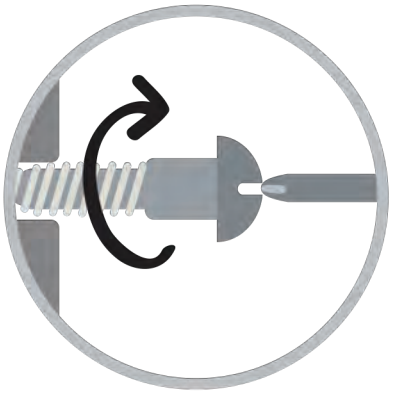

Turn clockwise to tighten and only tighten when step is completed or when instructed to do so.

Use the appropriate hand tools or power tools for assembly. Select steps, such as tightening screws and/or bolts, may require hand tools to avoid causing damage during assembly.

Save the instructions and store any supplied tools for later maintenance.

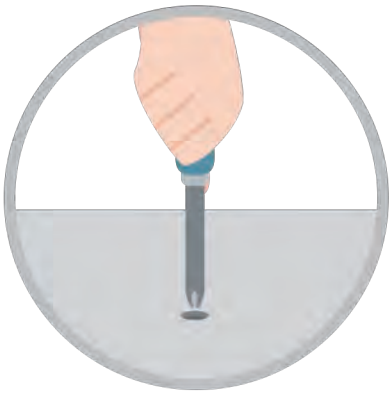

After two weeks, check and tighten any loose hardware and repeat again every six months thereafter.

IT IS THE USER'S RESPONSIBILITY TO MAINTAIN THE FURNITURE. THE HARDWARE MAY LOOSEN OVER TIME AND MAY CAUSE THE FURNITURE TO BE WOBBLY AND UNABLE TO SUPPORT ITS INTENDED WEIGHT CAPACITY. THIS MAY LEAD TO COLLAPSE AND MAY CAUSE SERIOUS INJURY.

E.KING BED

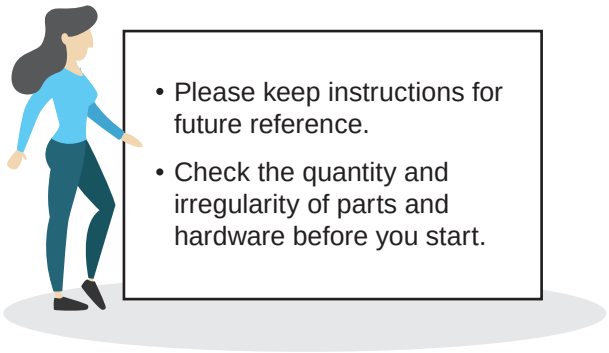

- Please keep instructions for future reference.
- Check the quantity and irregularity of parts and hardware before you start.

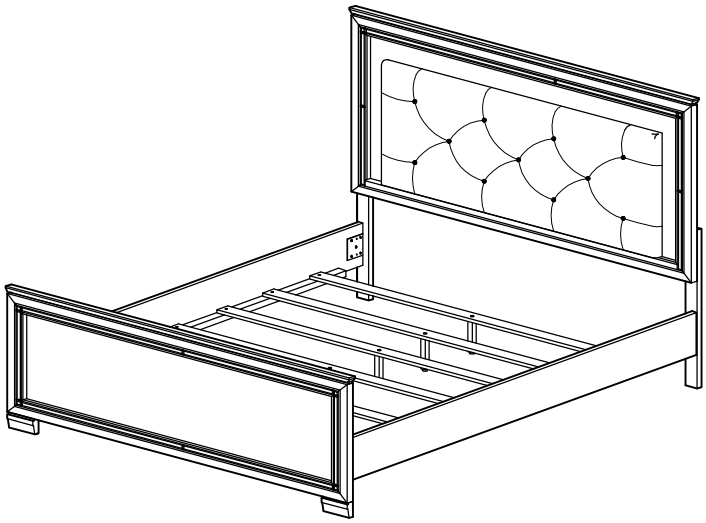

PARTS

PART LIST OF HEADBOARD

#1 1pc

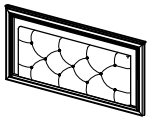

Headboard

#2 1pc

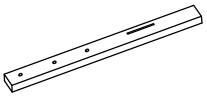

Headboard Leg - (R)

#3 1pc

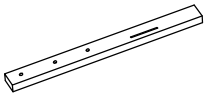

Headboard Leg - (L)

PART LIST OF FOOTBOARD

#4 1pc

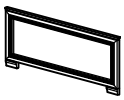

Footboard

PART LIST OF SIDE RAIL

#5 5pcs

Slat

#6 5pcs

Slat Support Leg
190x30x30mm

#7 2pcs

Side Rail

HARDWARE

HARDWARE PACK IN HEADBOARD

#A 1pc

Allen Key

#B 11pcs

JCBC - M6 x 35mm

#C 11pcs

M6 Spring Washer

#D 6pcs

M6 Flat Washer

#E 10pcs

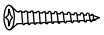

Screw 32mm

#F 5pcs

Leveller

#G 1pc

AC Adaptor

CM7979EK is packed in 3 cases

Carton	Designation	Part		Hardware
CM7979EK-HB	Headboard (1pc)	#1	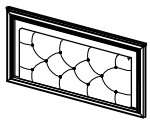	#A x 1pc #B x 11pcs #C x 11pcs #D x 6pcs 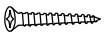 #E x 10pcs #F x 5pcs #G x 1pc
	Headboard Leg - (R) (1pc)	#2	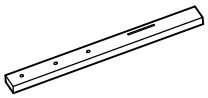	
	Headboard Leg - (L) (1pc)	#3	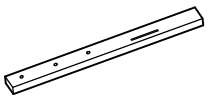	
CM7979EK-FB	Footboard (1pc)	#4	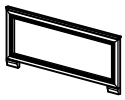	
CM7979EK-R	Slat (5pcs)	#5		
	Slat Support Leg (5pcs)	#6		
	Side Rail (2pcs)	#7		

ASSEMBLY INSTRUCTIONS

1

Part #1 x 1pc

Part #2 x 1pc

Part #3 x 1pc

Hardware #A x 1pc

Hardware #B x 6pcs

Hardware #C x 6pcs

Hardware #D x 6pcs

Align HB legs (#2,3) to the headboard (#1), then secure by using bolts (#B) with washers (#C,D).

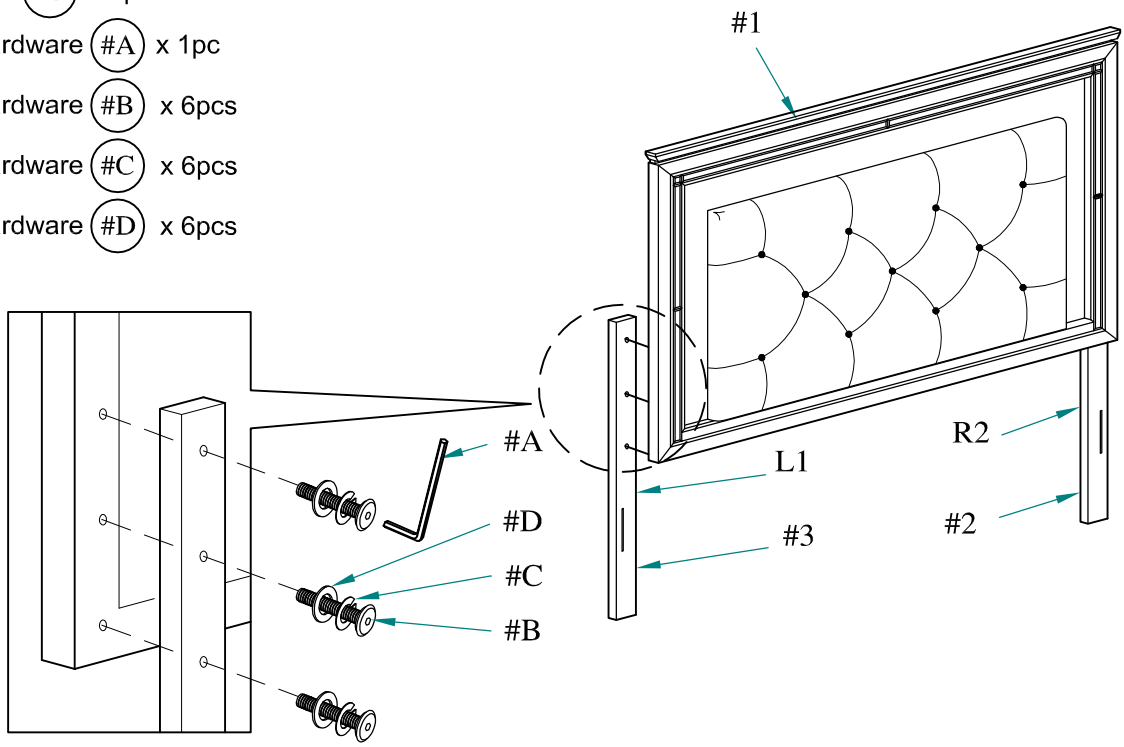

2

Hardware #G x 1pc

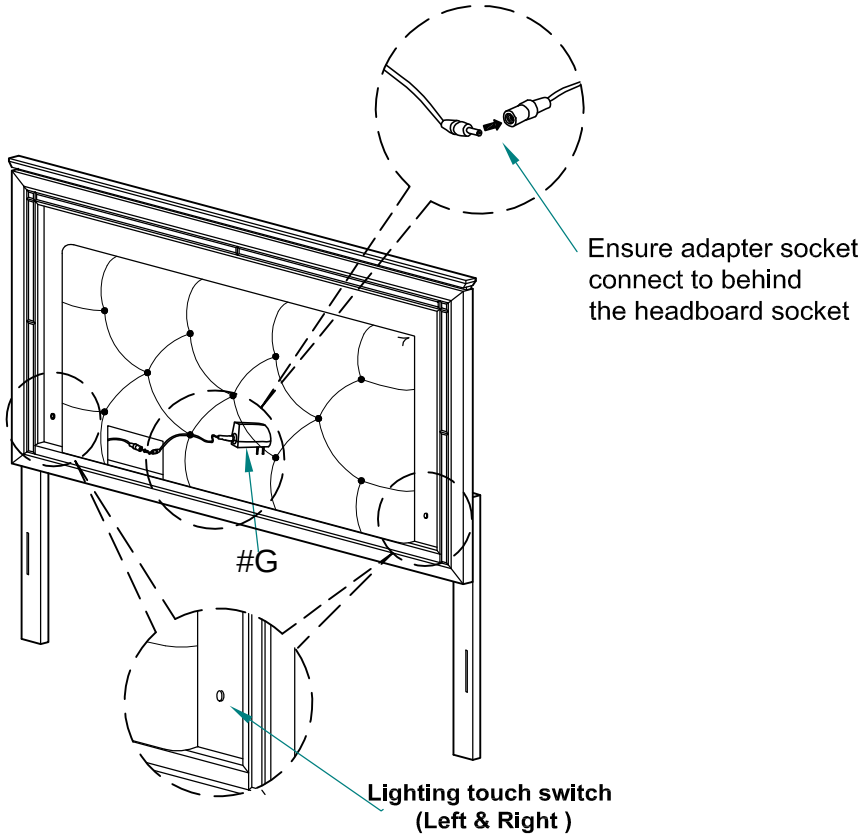

ASSEMBLY INSTRUCTIONS

3

Part #1 x 1pc

Part #4 x 1pc

Part #7 x 2pcs

Align and hook the side rails (#7) to the headboard (#1) and footboard (#4).

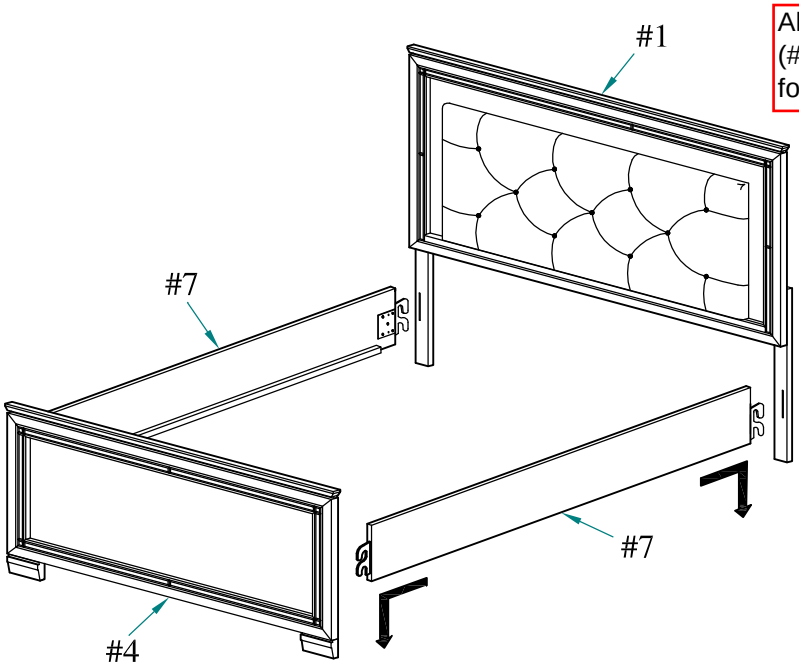

4

Part #5 x 5pcs

Part #6 x 5pcs

Hardware #A x 1pc

Hardware #B x 5pcs

Hardware #C x 5pcs

Hardware #E x 10pcs

Hardware #F x 5pcs

Align slat support (#6) to the slats (#5), then secure by using bolts (#B) with washers (#C). Attach and adjust leveler (#F) onto the support leg (#6).

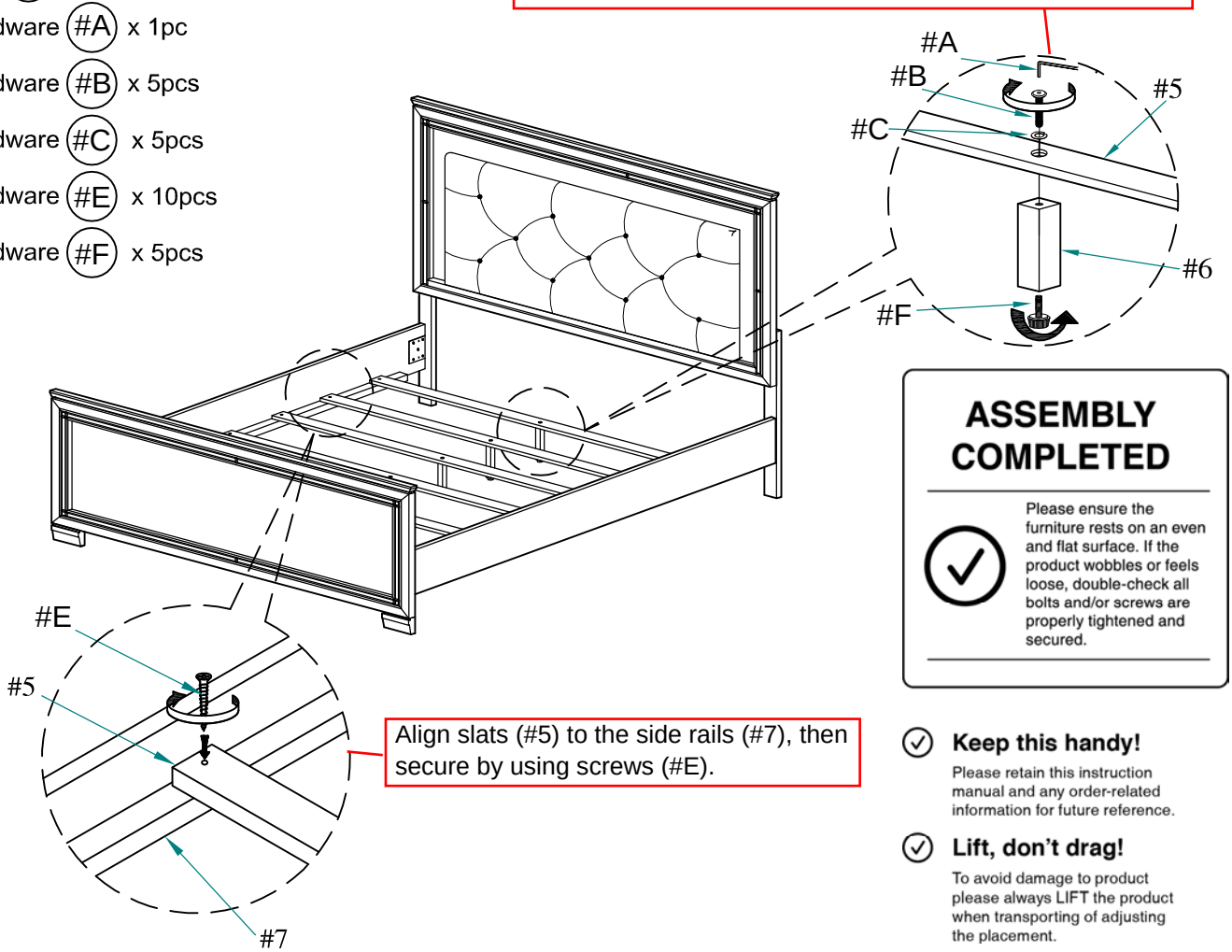

Align slats (#5) to the side rails (#7), then secure by using screws (#E).

ASSEMBLY COMPLETED

Please ensure the furniture rests on an even and flat surface. If the product wobbles or feels loose, double-check all bolts and/or screws are properly tightened and secured.

Keep this handy!

Please retain this instruction manual and any order-related information for future reference.

Lift, don't drag!

To avoid damage to product please always LIFT the product when transporting of adjusting the placement.