ASSEMBLY INSTRUCTION

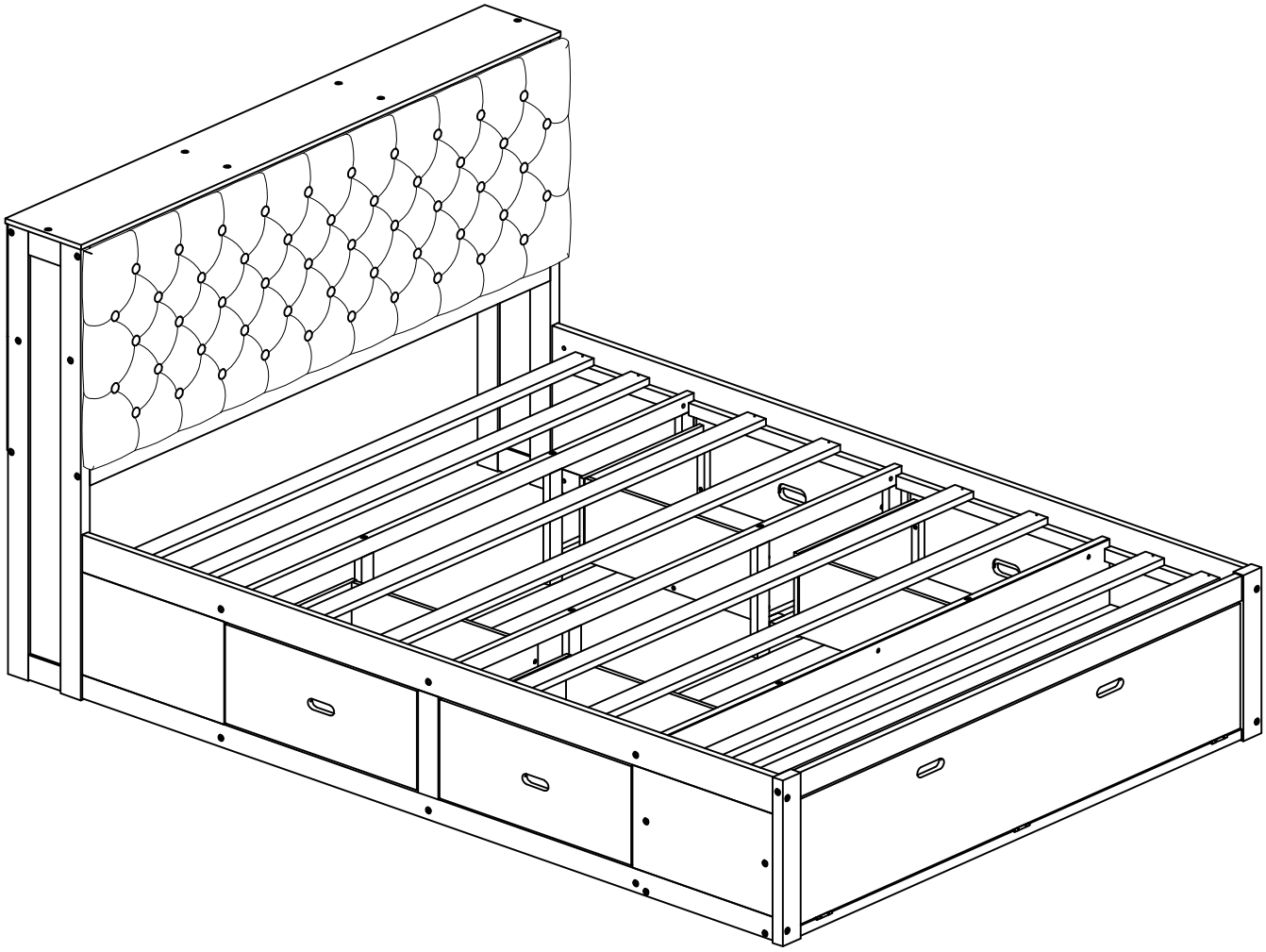

ASSEMBLY INSTRUCTION

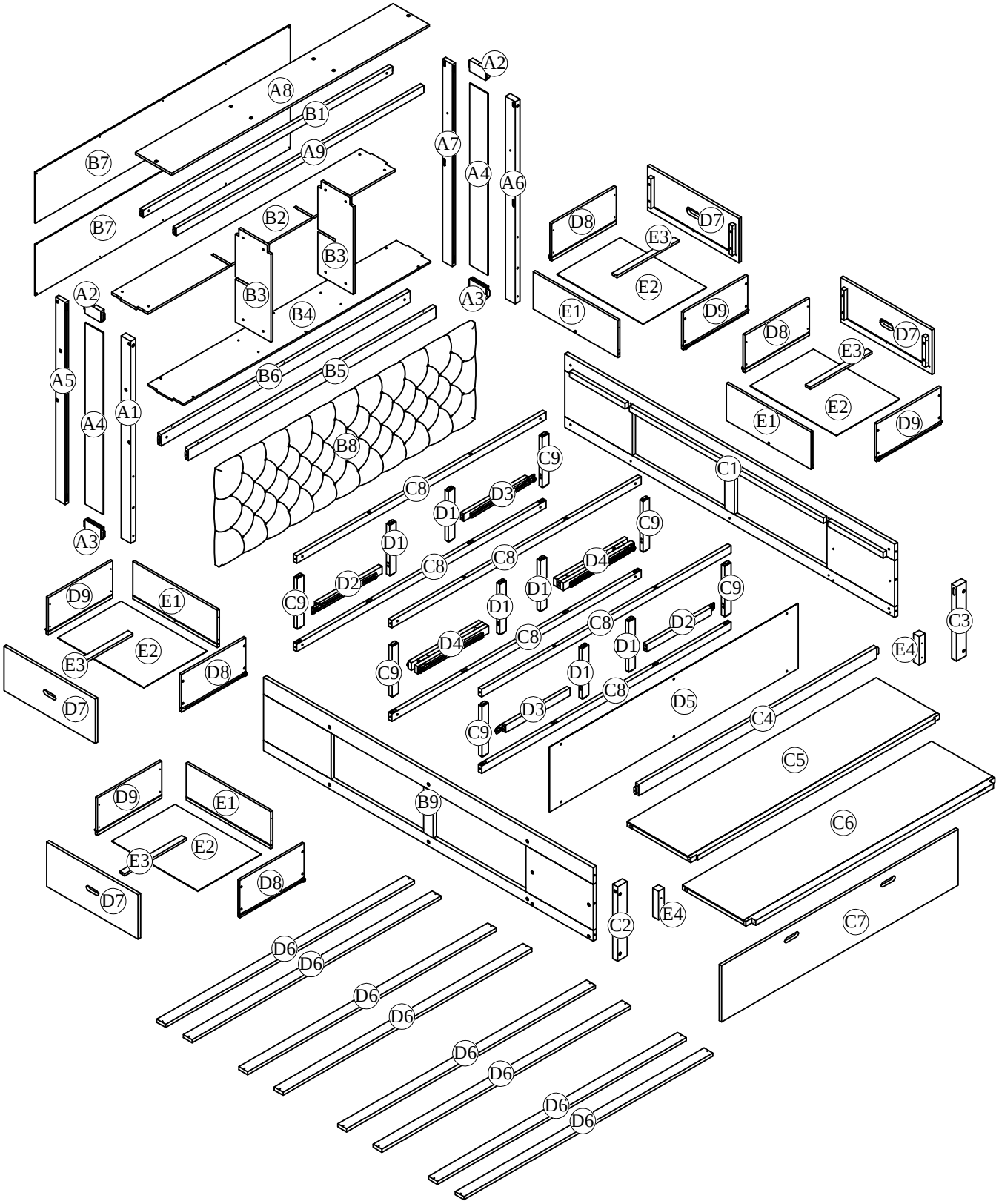

Part List (Box 1)

A1 Woodleg-1pc	A5 Woodleg-1pc	A6 Woodleg-1pc
A7 Woodleg-1pc	B5 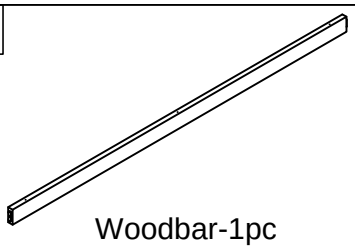 Woodbar-1pc	B6 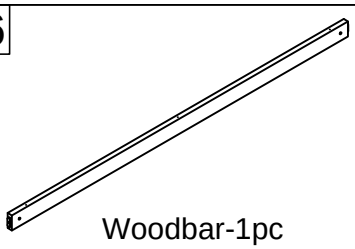 Woodbar-1pc
B8 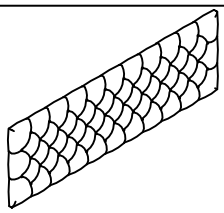 Mattress Frame-1pc	C2 Woodleg-1pc	C3 Woodleg-1pc
C4 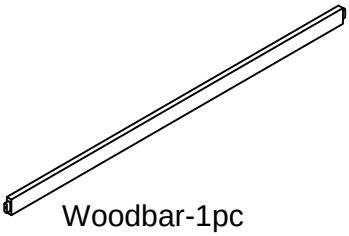 Woodbar-1pc	C5 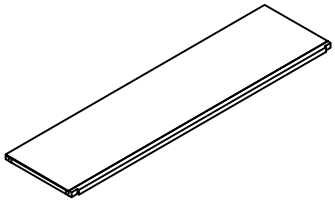 Wood Frame-1pc	C6 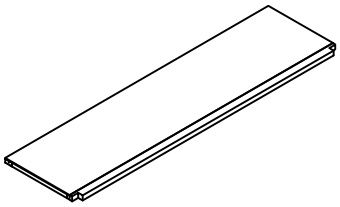 Wood Frame-1pc
C9 Woodbar-6pcs	D1 Woodbar-6pcs	D6 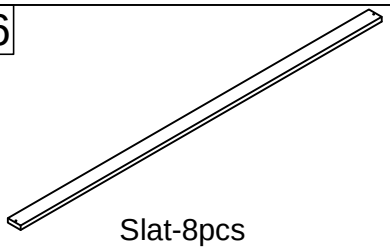 Slat-8pcs
E1 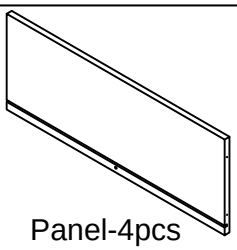 Panel-4pcs	E2 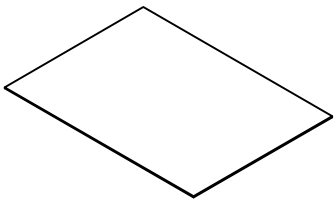 Panel-4pcs	E3 Woodbar-4pcs
E4 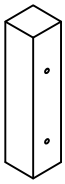 Woodbar-2pcs		

Part List (Box 2)

B9 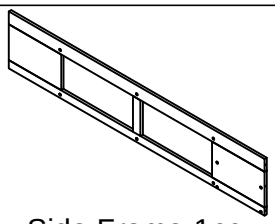 Side Frame-1pc	C1 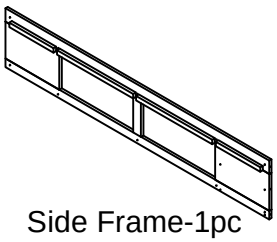 Side Frame-1pc

Part List & Hardware List (Box 3)

A2 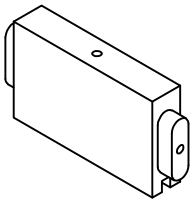 Woodbar-2pcs	A3 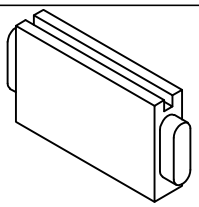 Woodbar-2pcs	A4 Panel-2pcs
A8 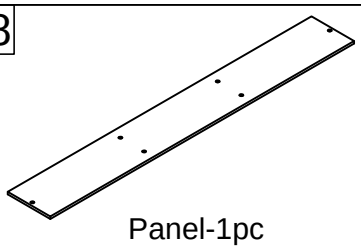 Panel-1pc	A9 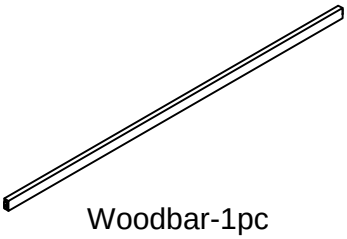 Woodbar-1pc	B1 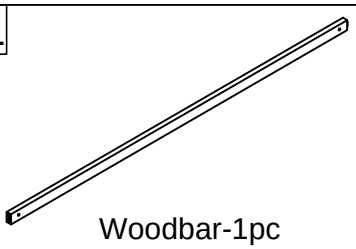 Woodbar-1pc
B2 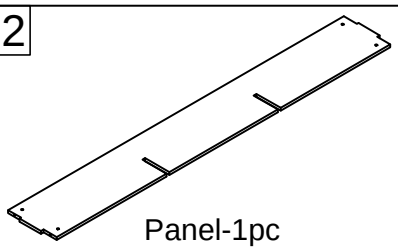 Panel-1pc	B3 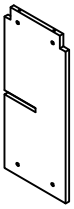 Panel-2pcs	B4 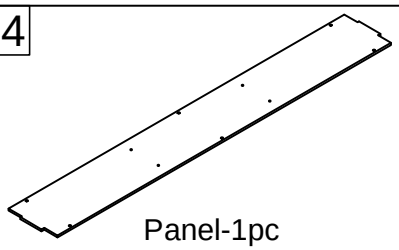 Panel-1pc
B7 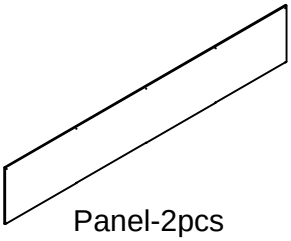 Panel-2pcs	C7 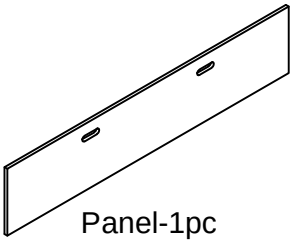 Panel-1pc	C8 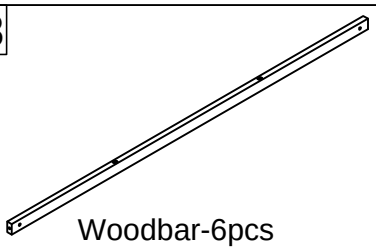 Woodbar-6pcs
D2 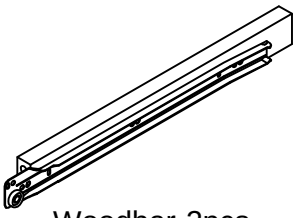 Woodbar-2pcs	D3 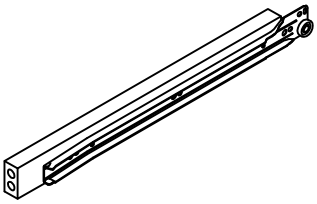 Woodbar-2pcs	D4 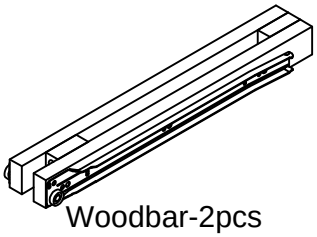 Woodbar-2pcs
D5 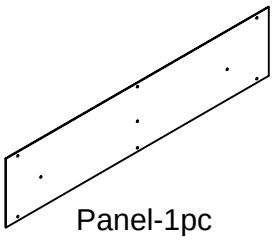 Panel-1pc	D7 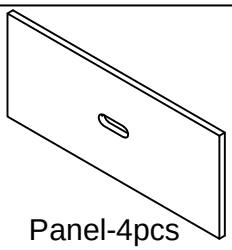 Panel-4pcs	D8 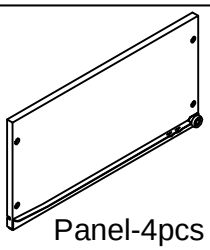 Panel-4pcs
D9 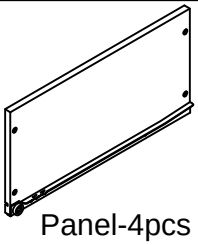 Panel-4pcs		

Hardware List (Box 3)

1 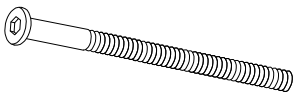 Ø1/4" x 100 mm Hex-Head bolts 6pcs	2 Ø1/4" x 12 mm Horizontal-Hole bolts 42pcs	3 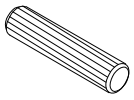 Ø10 x 40 mm Wood dowel 4pcs
4 Screws 1/4" x50 12pcs	5 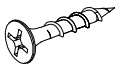 M3.5 x 12 mm Wood Screws 38pcs	6 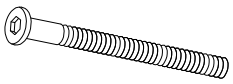 Ø1/4" x 70 mm Hex-Head bolts 20pcs
7 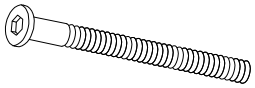 Ø1/4" x 80 mm Hex-Head bolts 8pcs	8 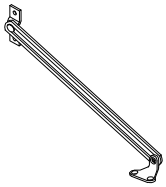 Sliding Door Strut - 2pcs	9 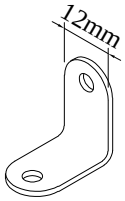 Angle Bracket - 4pcs
10 Screws 1/4" x40 10pcs	11 M4 x 30 mm Wood Screws 56pcs	12 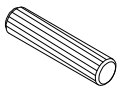 Ø8 x 30 mm Wood dowel 24pcs
13 Ø1/4" x 50 mm Hex-Head bolts 8pcs	14 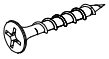 M4 x 20 mm Wood Screws 11pc	15 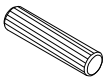 Ø6 x 30 mm Wood dowel 4pcs
16 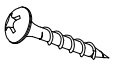 M4 x 15 mm Wood Screws 31pcs	17 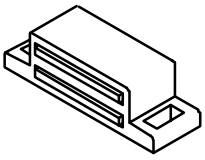 Magnet Door Catcher 2pcs	18 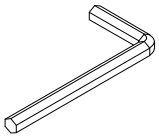 Allen Key 1pc
19 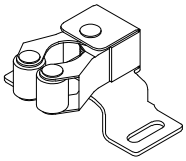 Door Catcher 3pcs	20 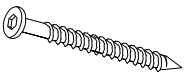 Screws 1/4" x70 6pcs	

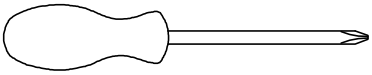

Assembly Tools Required (Not Included)

STEP1:x2 Following below illustration.

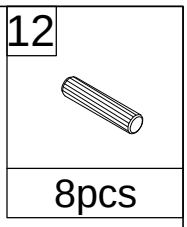

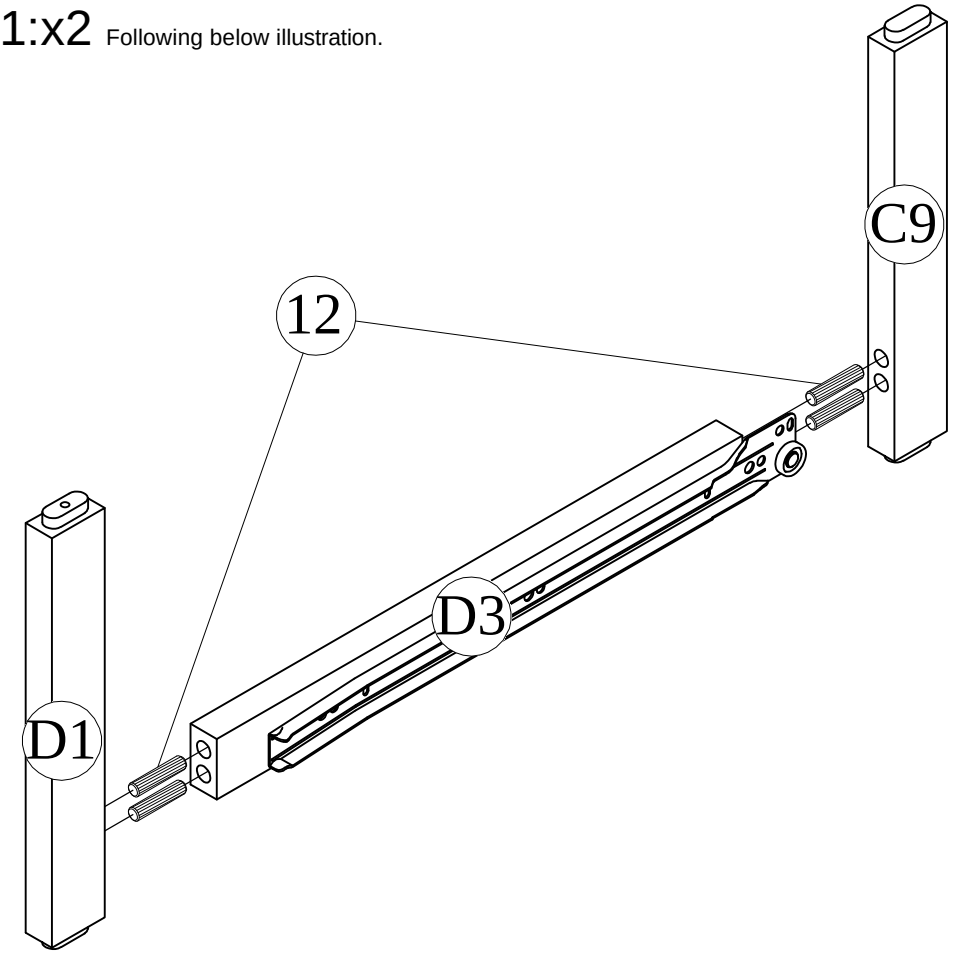

STEP2:x2 Following below illustration.

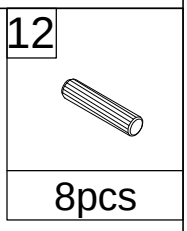

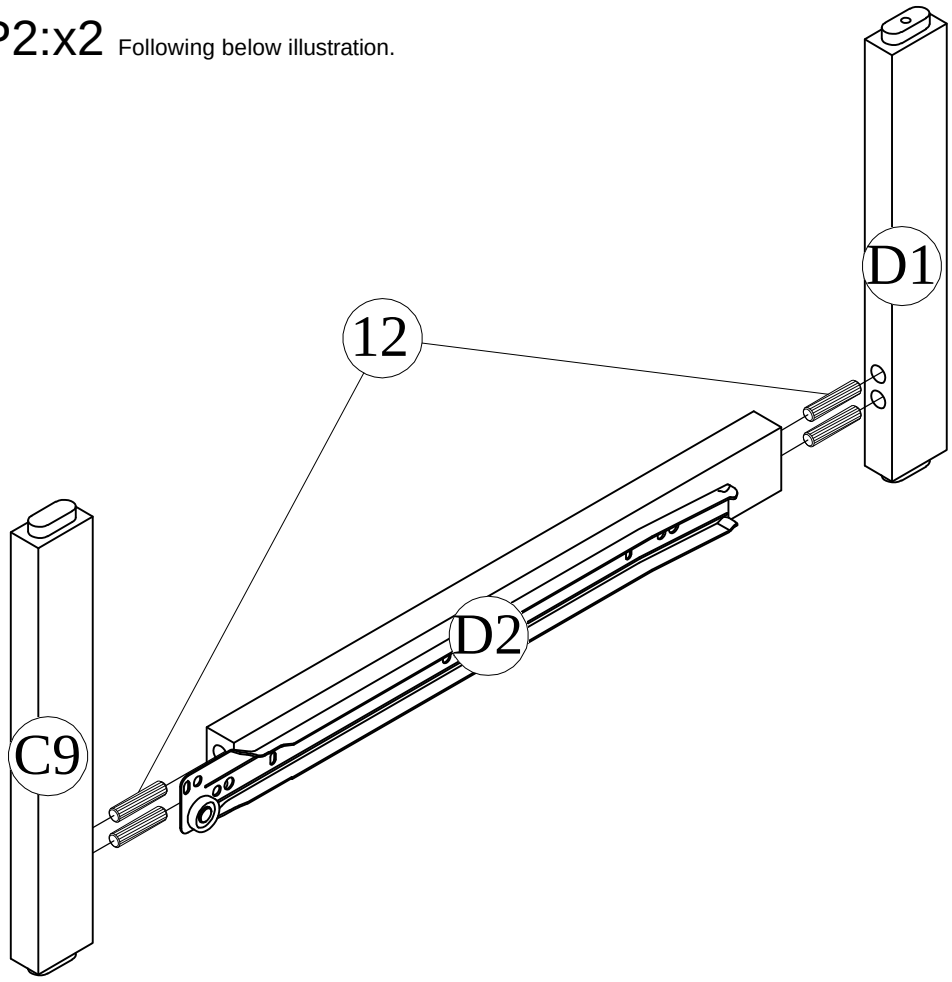

STEP3:x2 Following below illustration.

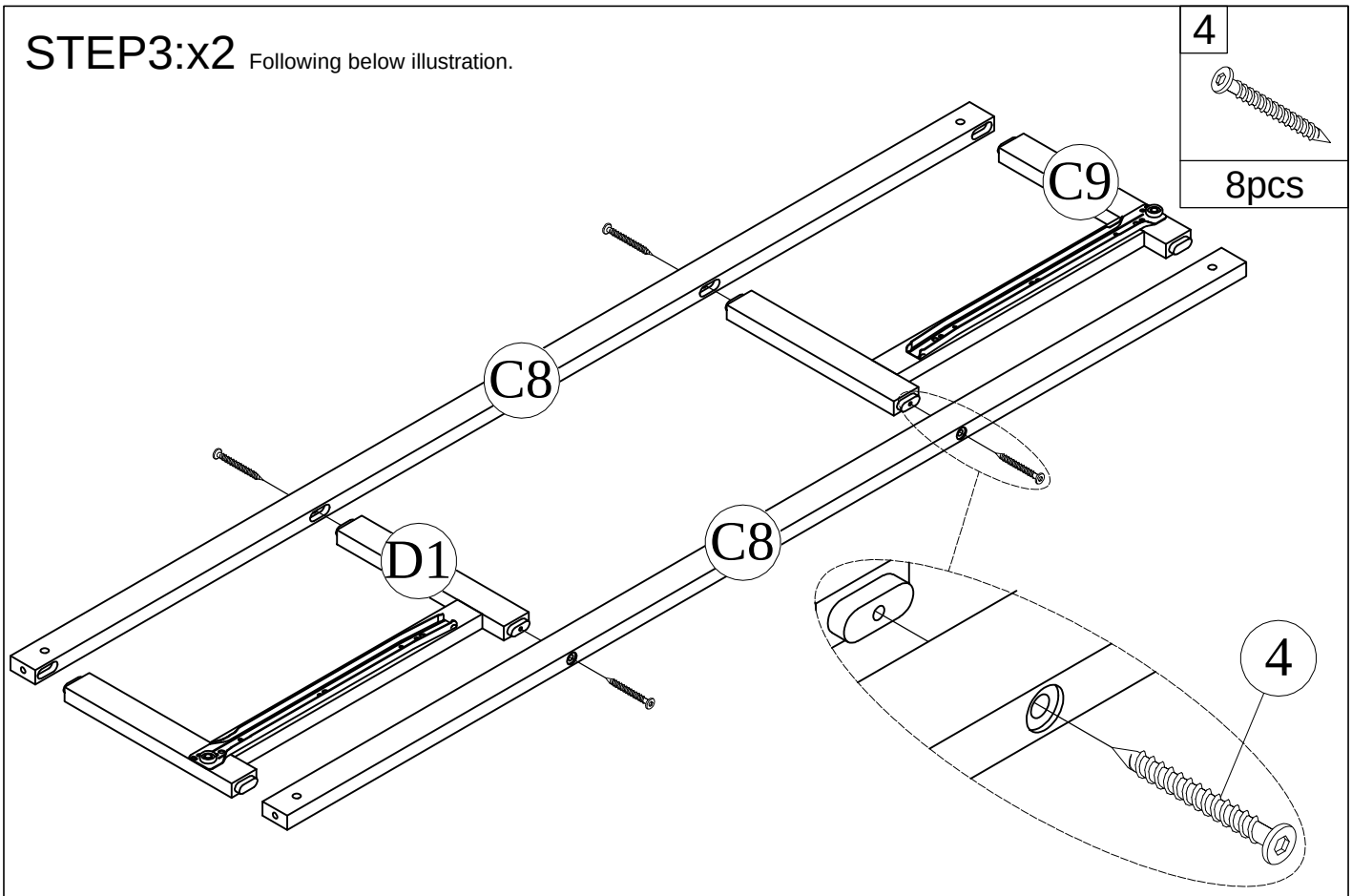

STEP4: Following below illustration.

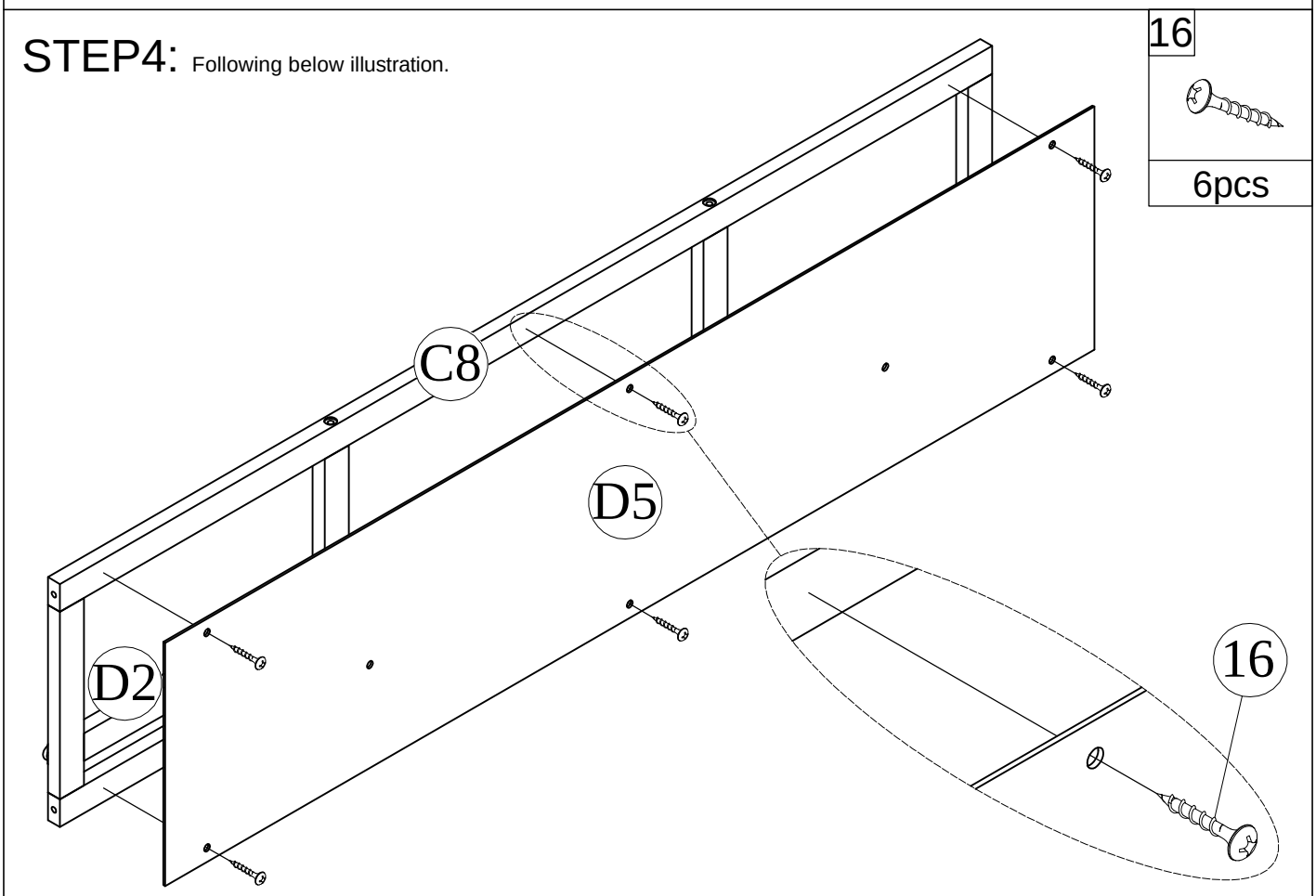

STEP5:x2 Following below illustration.

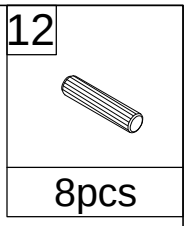

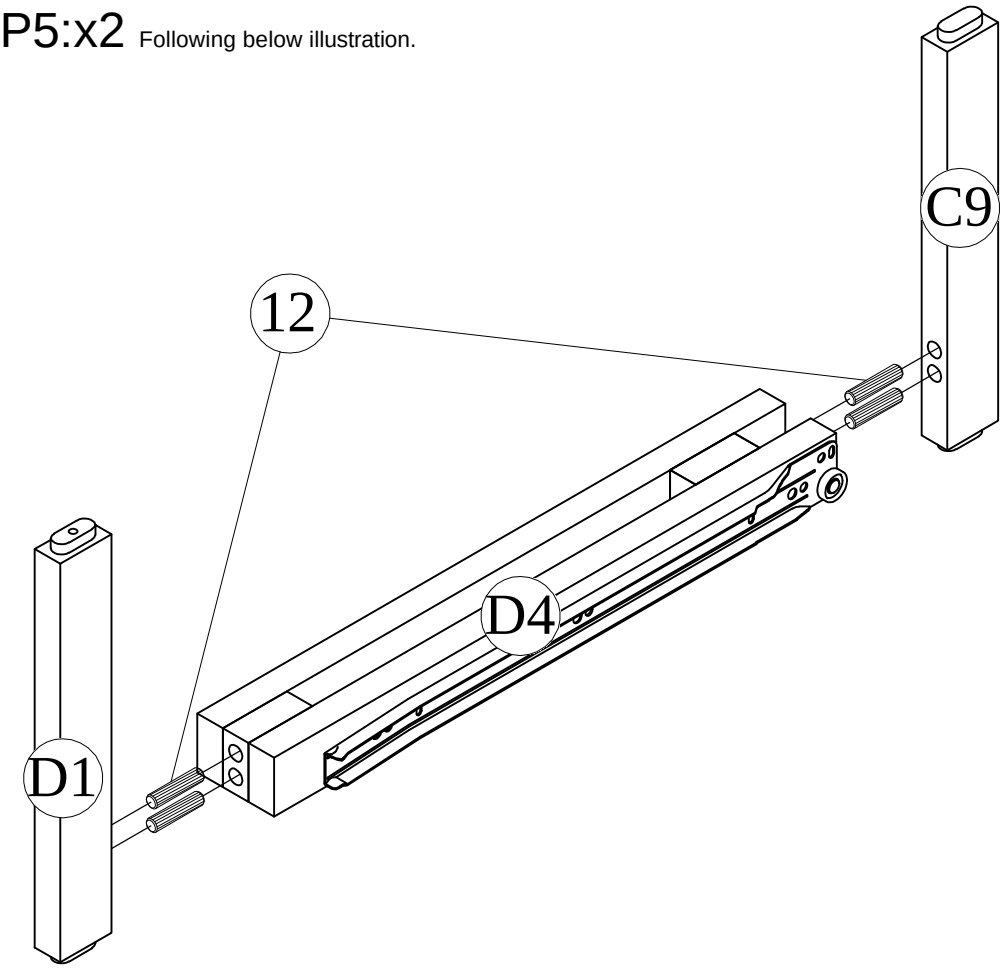

STEP6: Following below illustration.

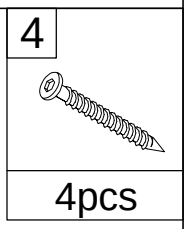

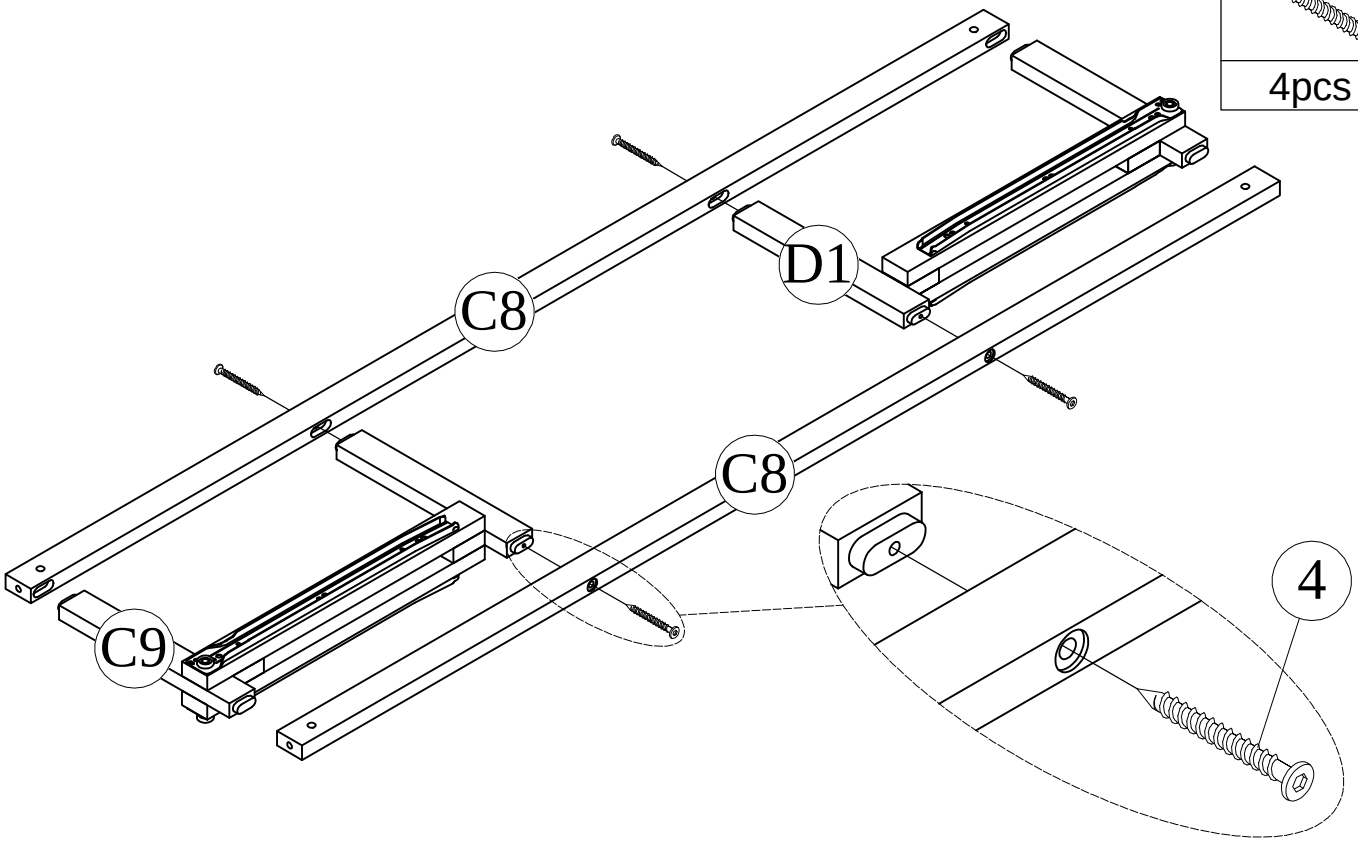

STEP7: Following below illustration.

2	6
12pcs	12pcs

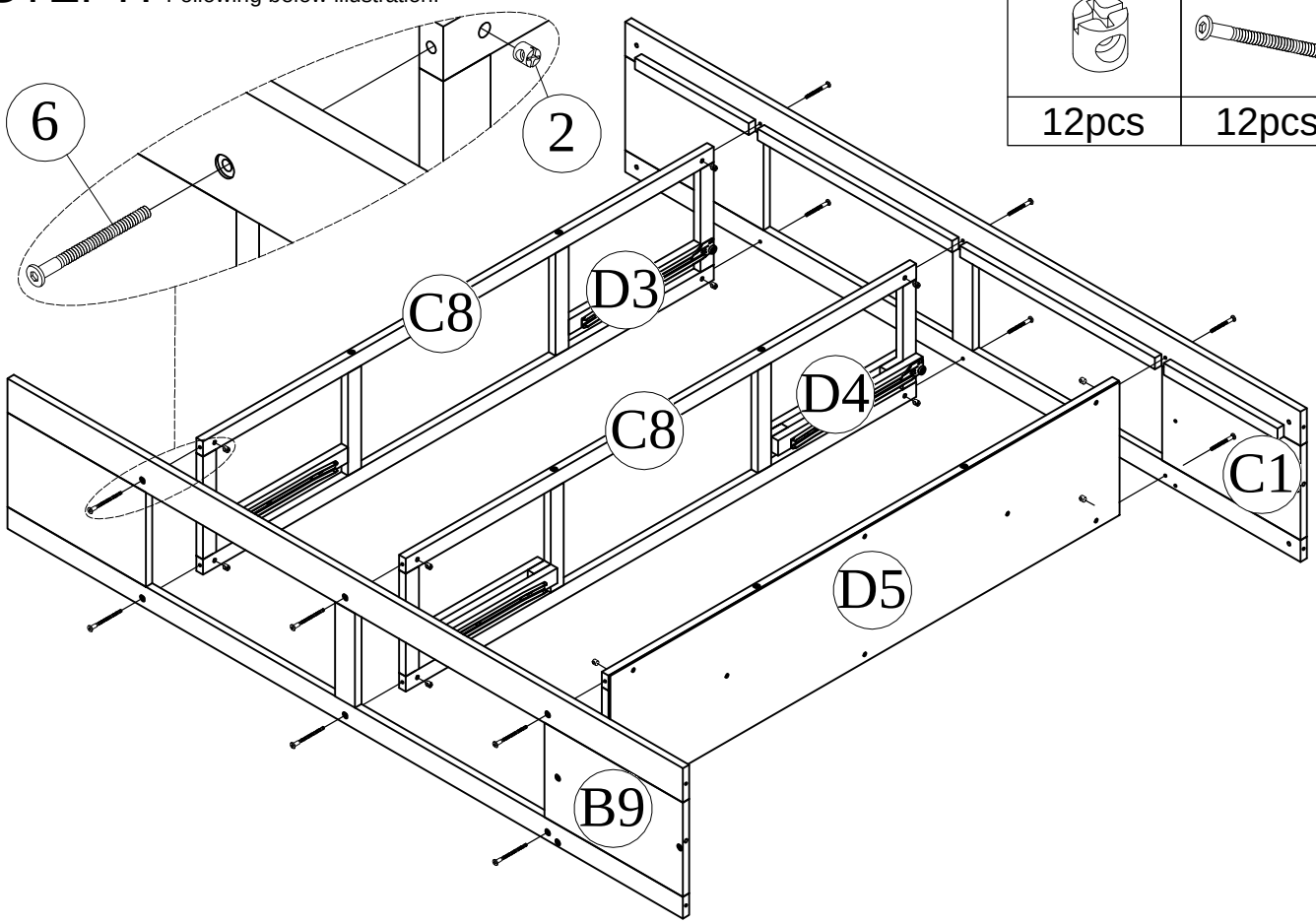

STEP8: Following below illustration.

10
8pcs

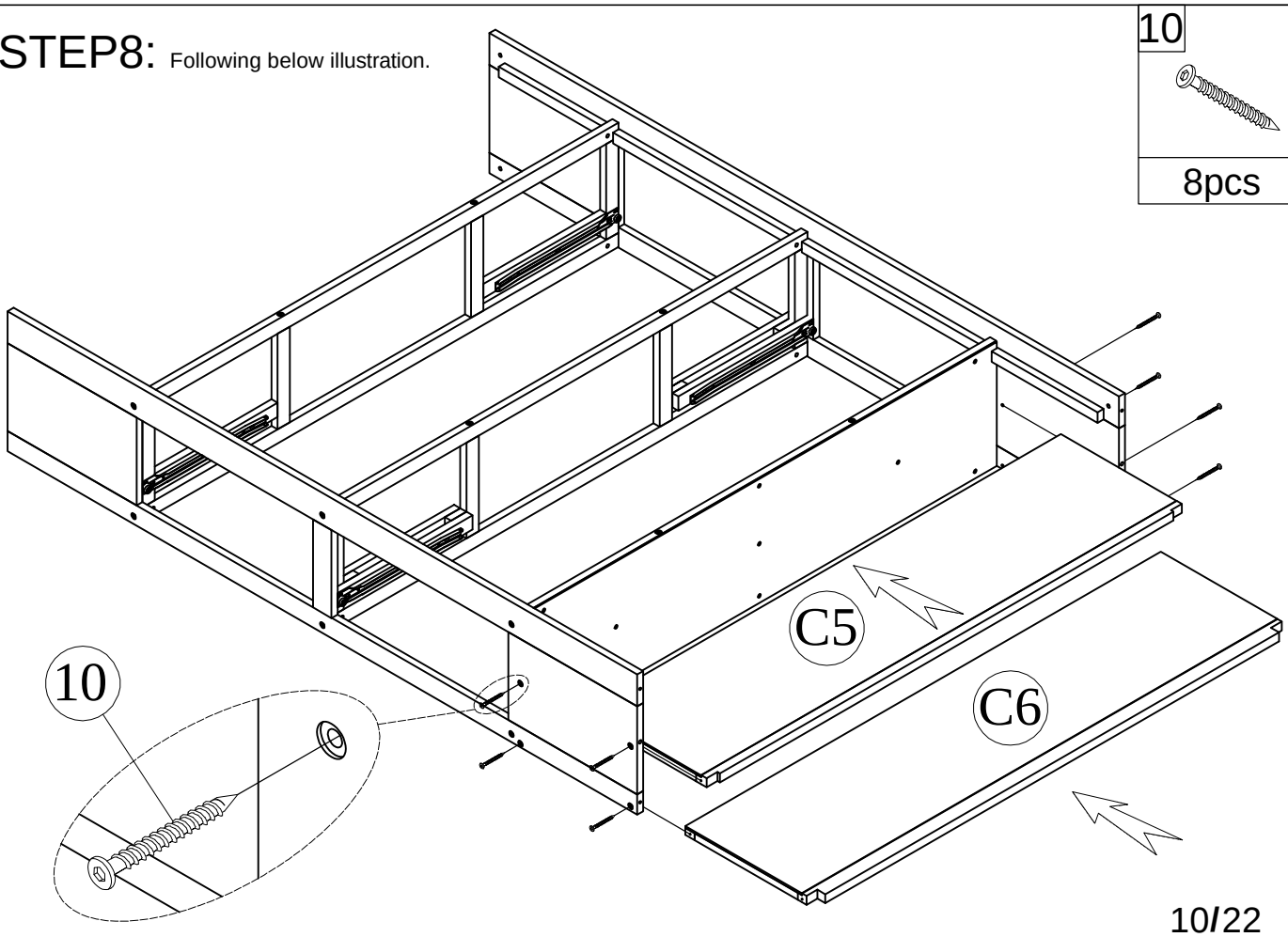

STEP9: Following below illustration.

1	2
2pcs	2pcs

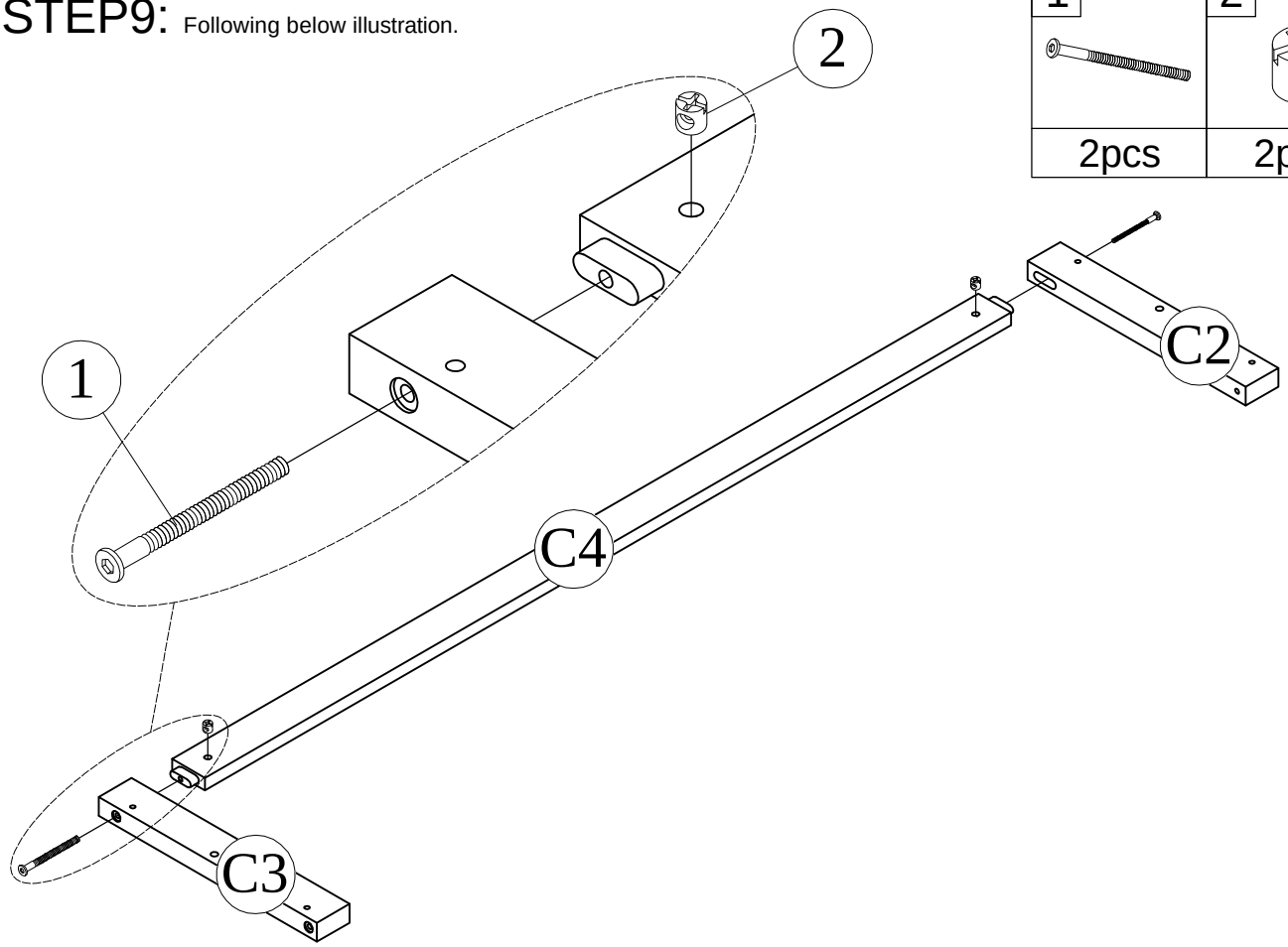

STEP10: Following below illustration.

11
4pcs

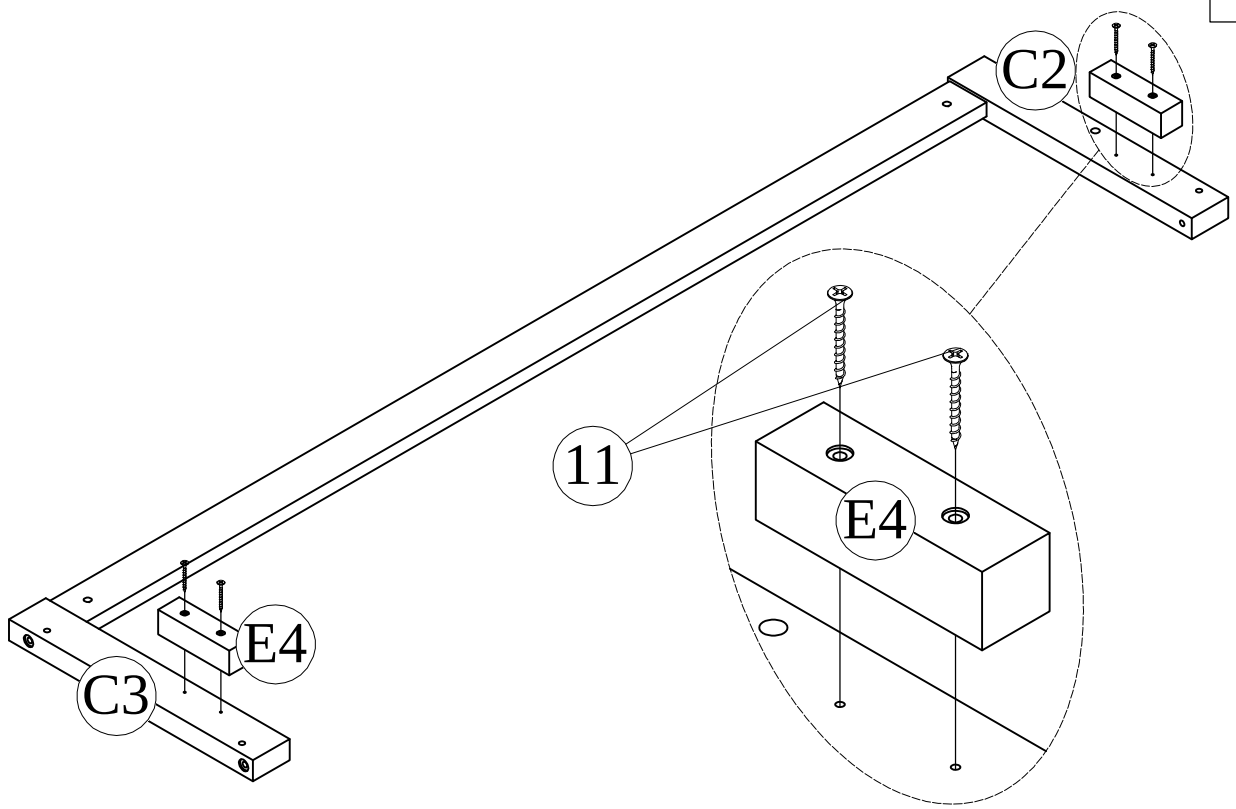

STEP11: Following below illustration.

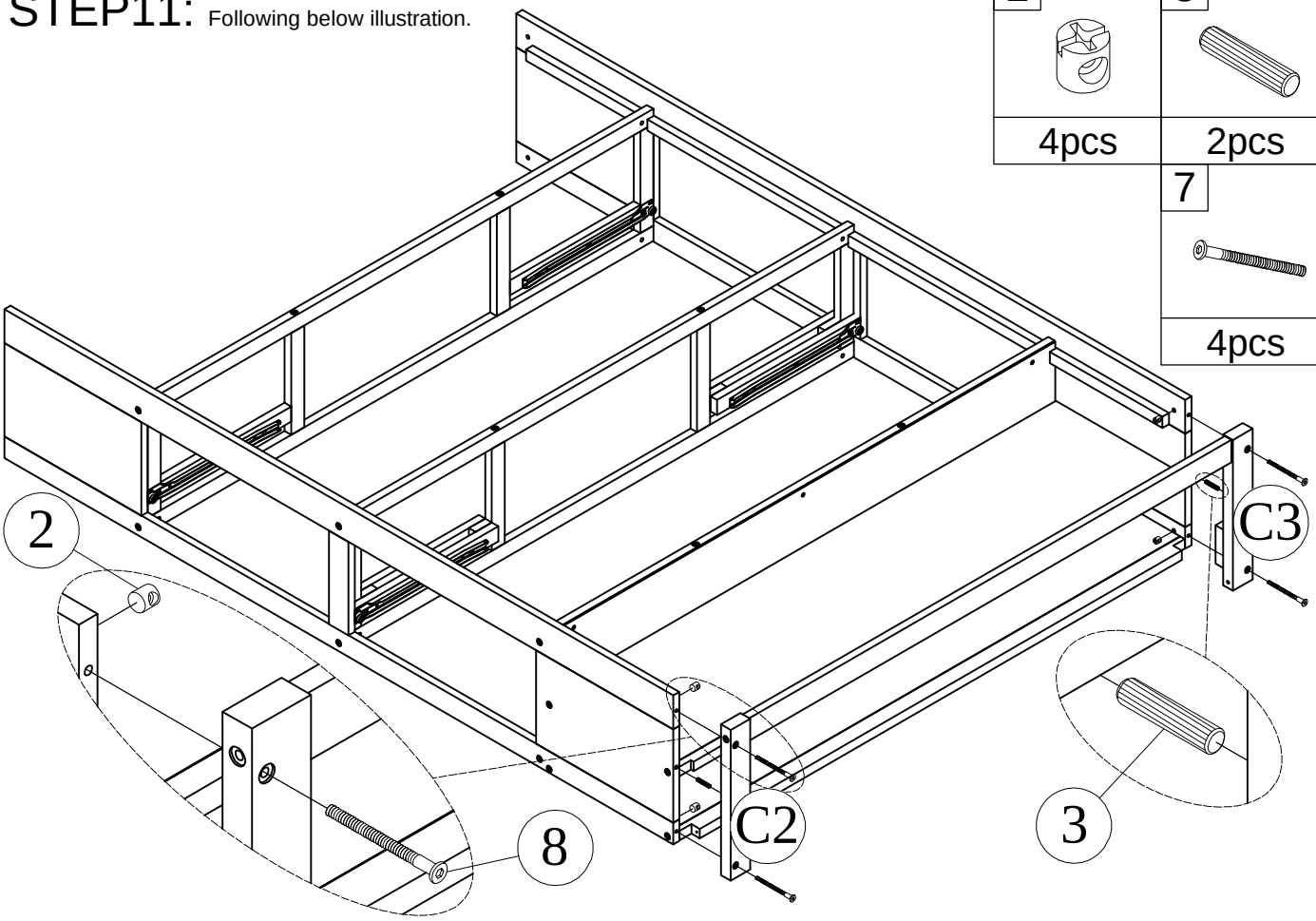

STEP12: Following below illustration.

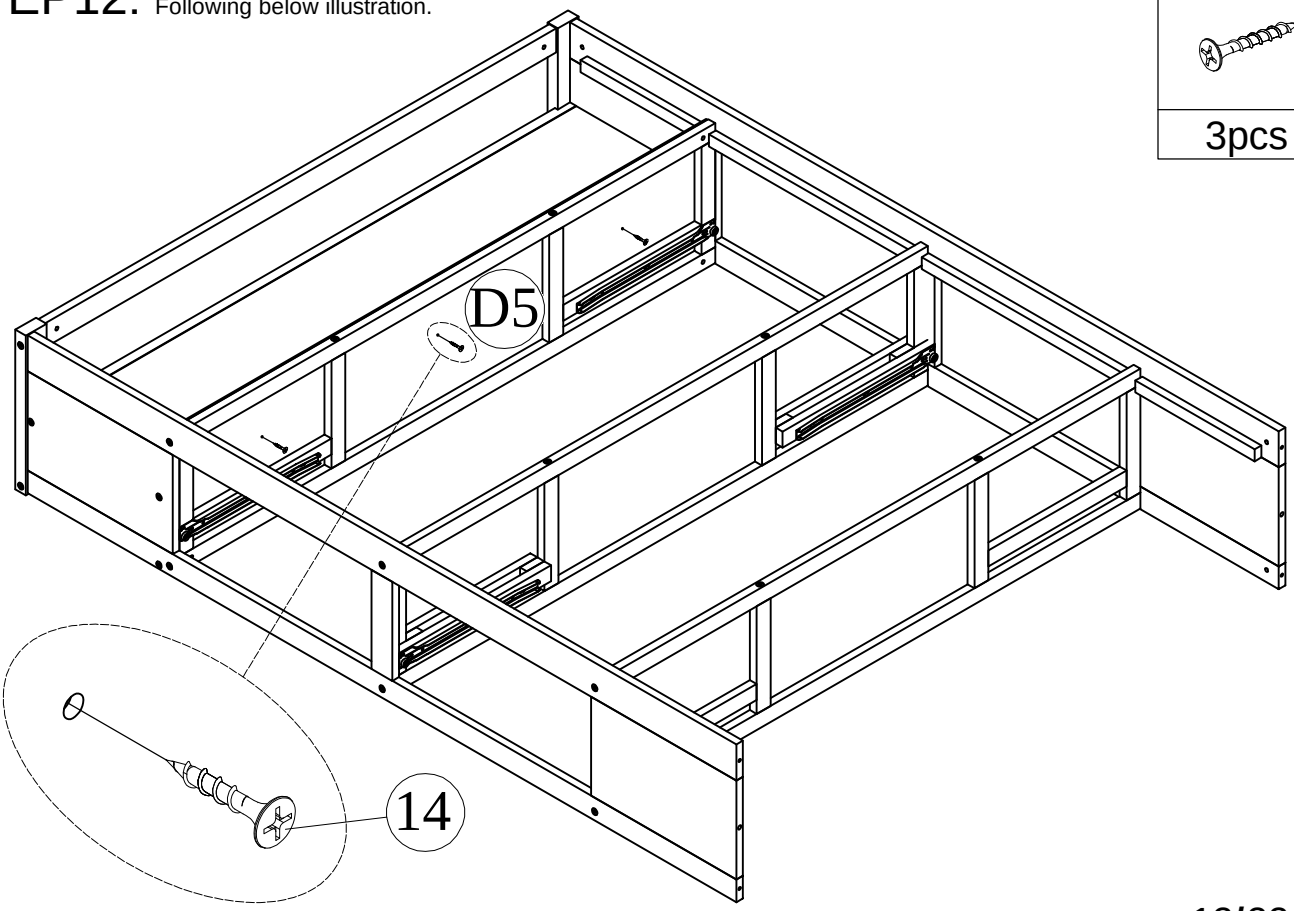

STEP13: Following below illustration.

2	7
4pcs	4pcs

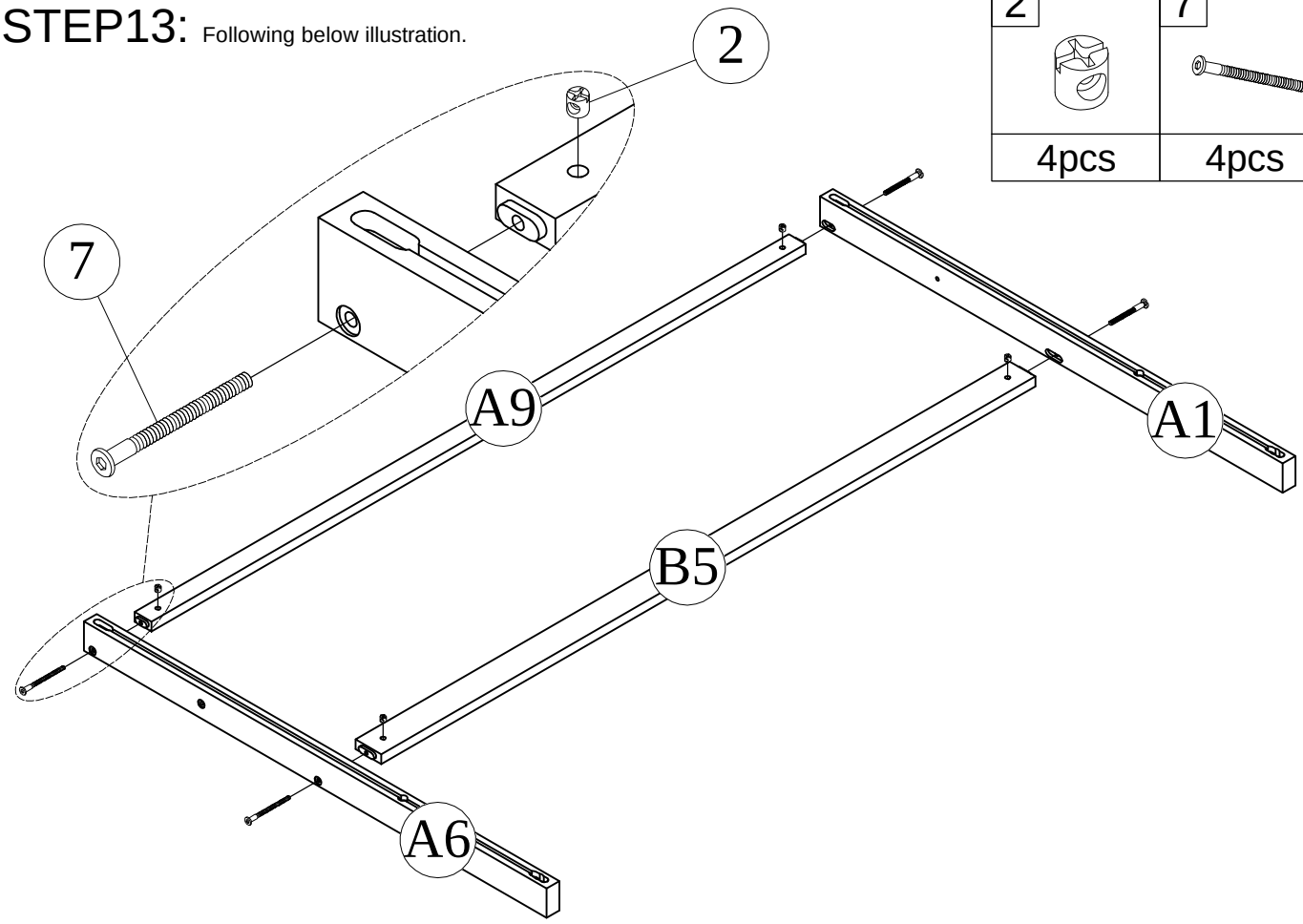

STEP14: Following below illustration.

1	2	3
4pcs	4pcs	2pcs

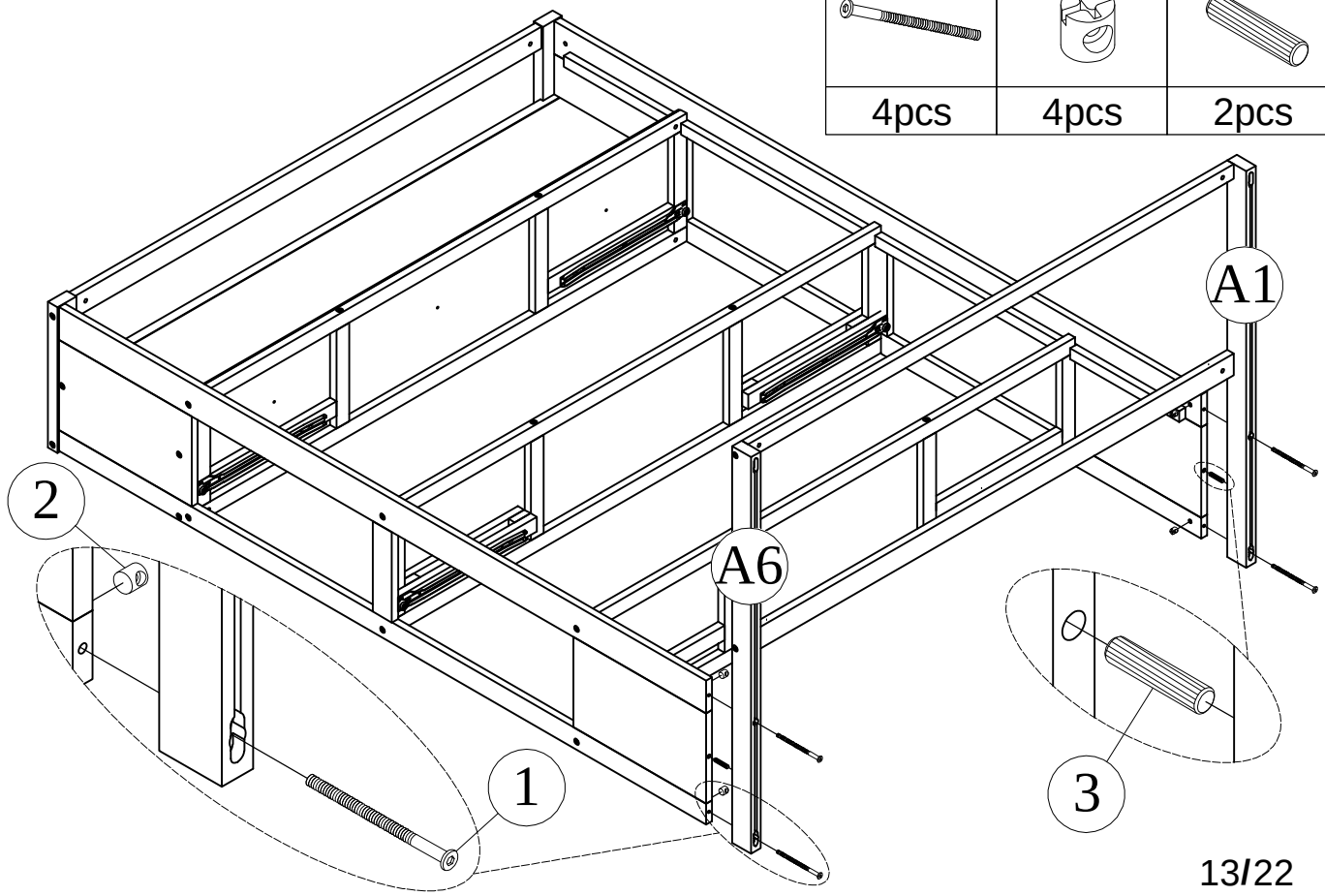

STEP15: Following below illustration.

2	13
4pcs	4pcs

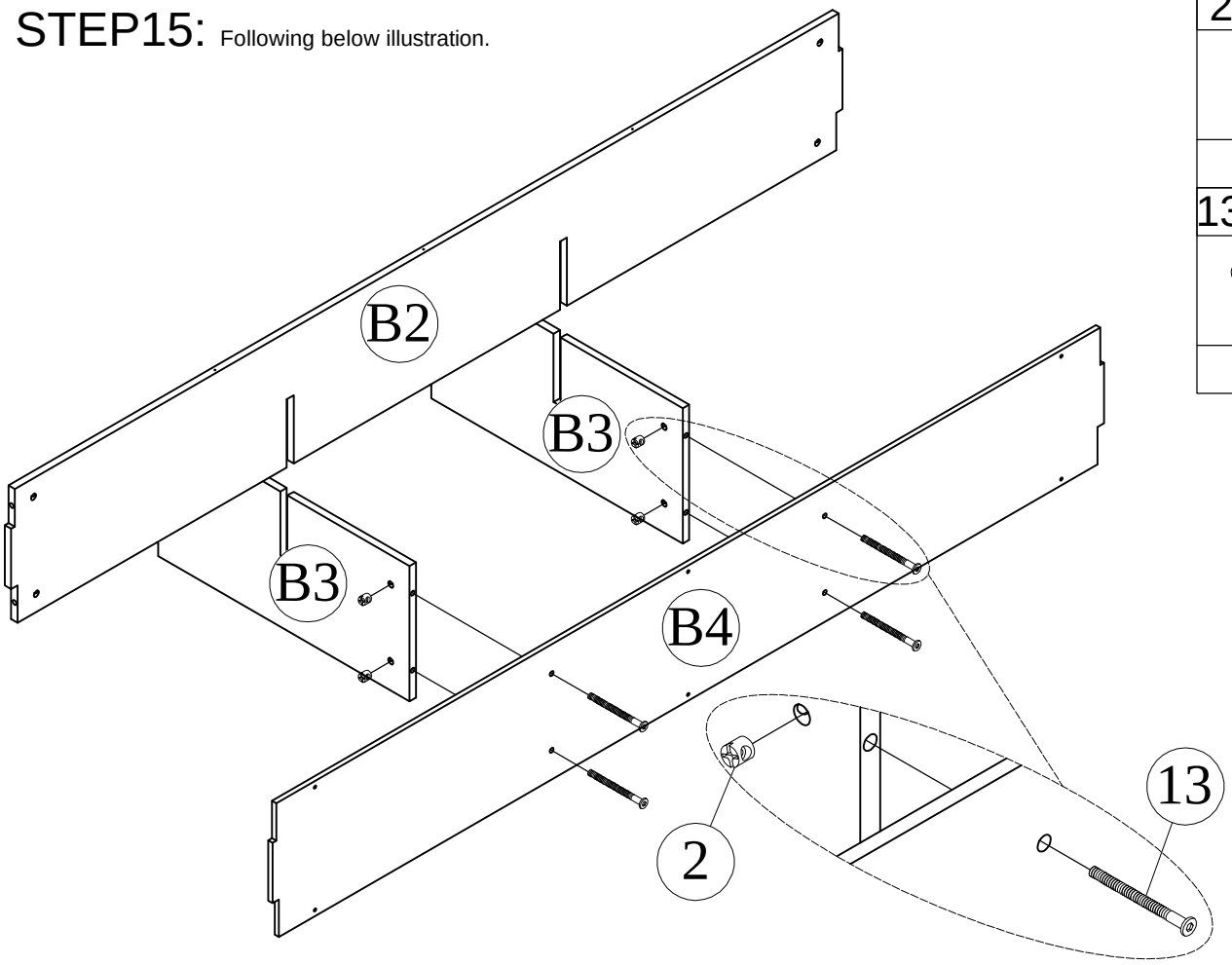

STEP16: Following below illustration.

2	6
4pcs	4pcs

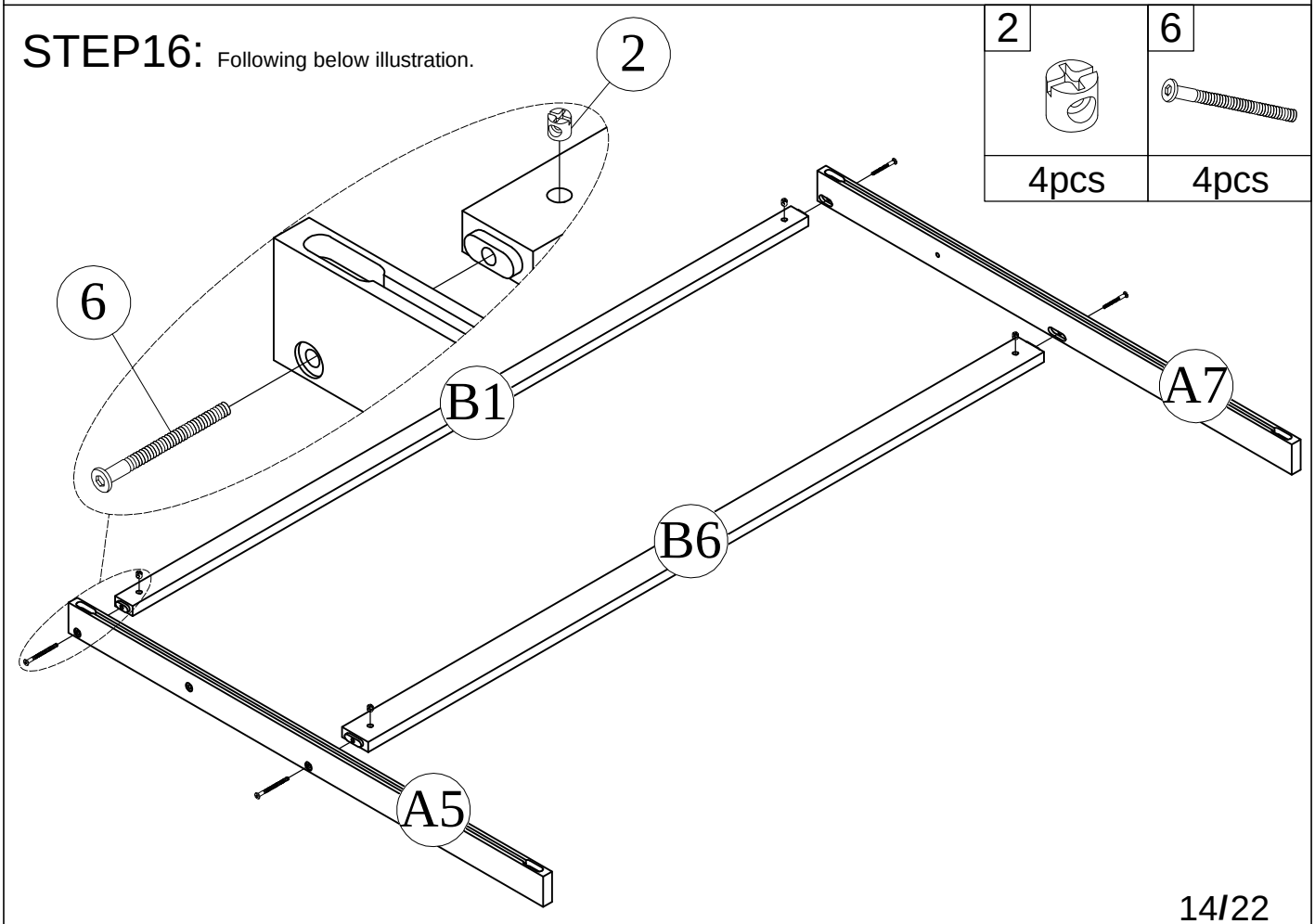

STEP17: Following below illustration.

20
6pcs

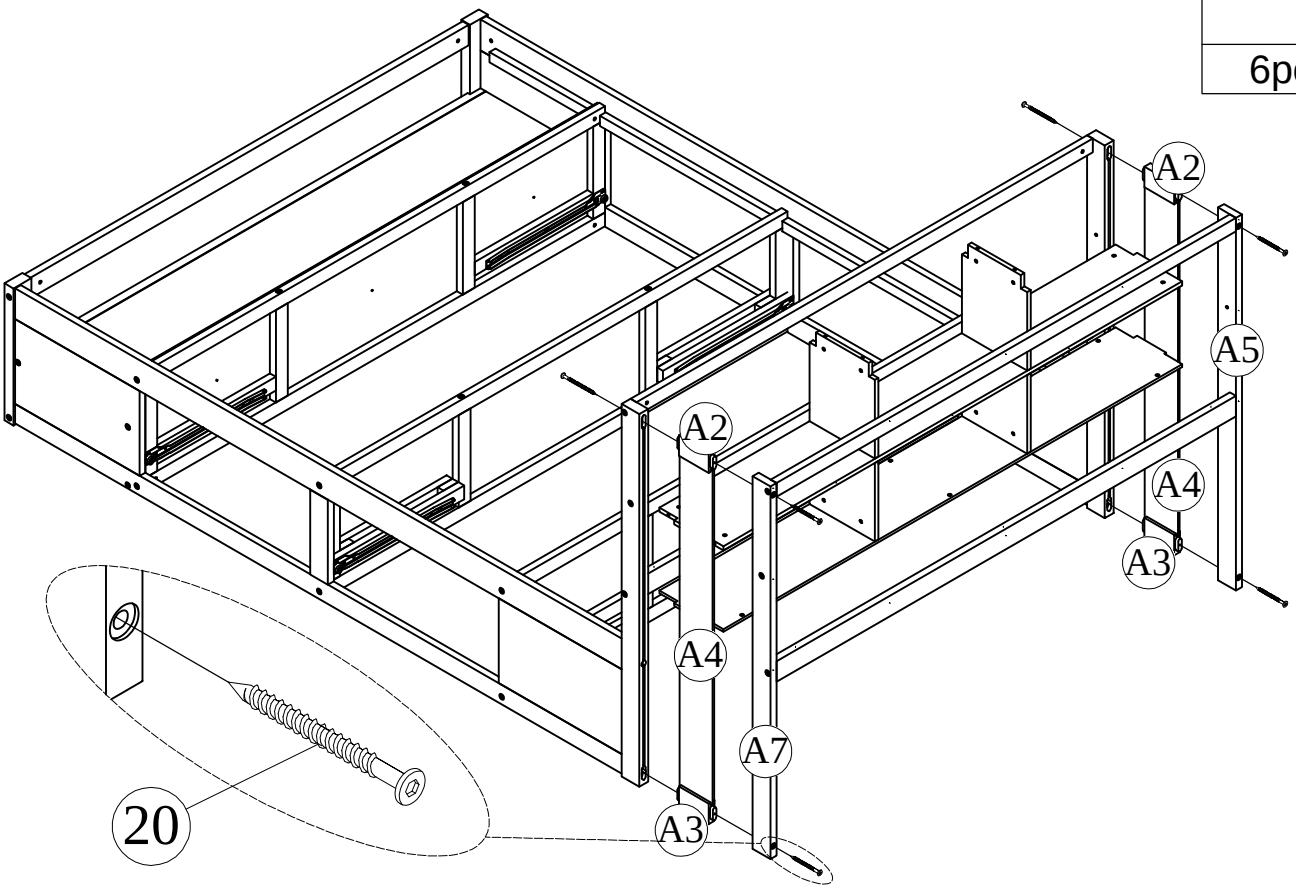

STEP18: Following below illustration.

2	6
4pcs	4pcs

14
6pcs

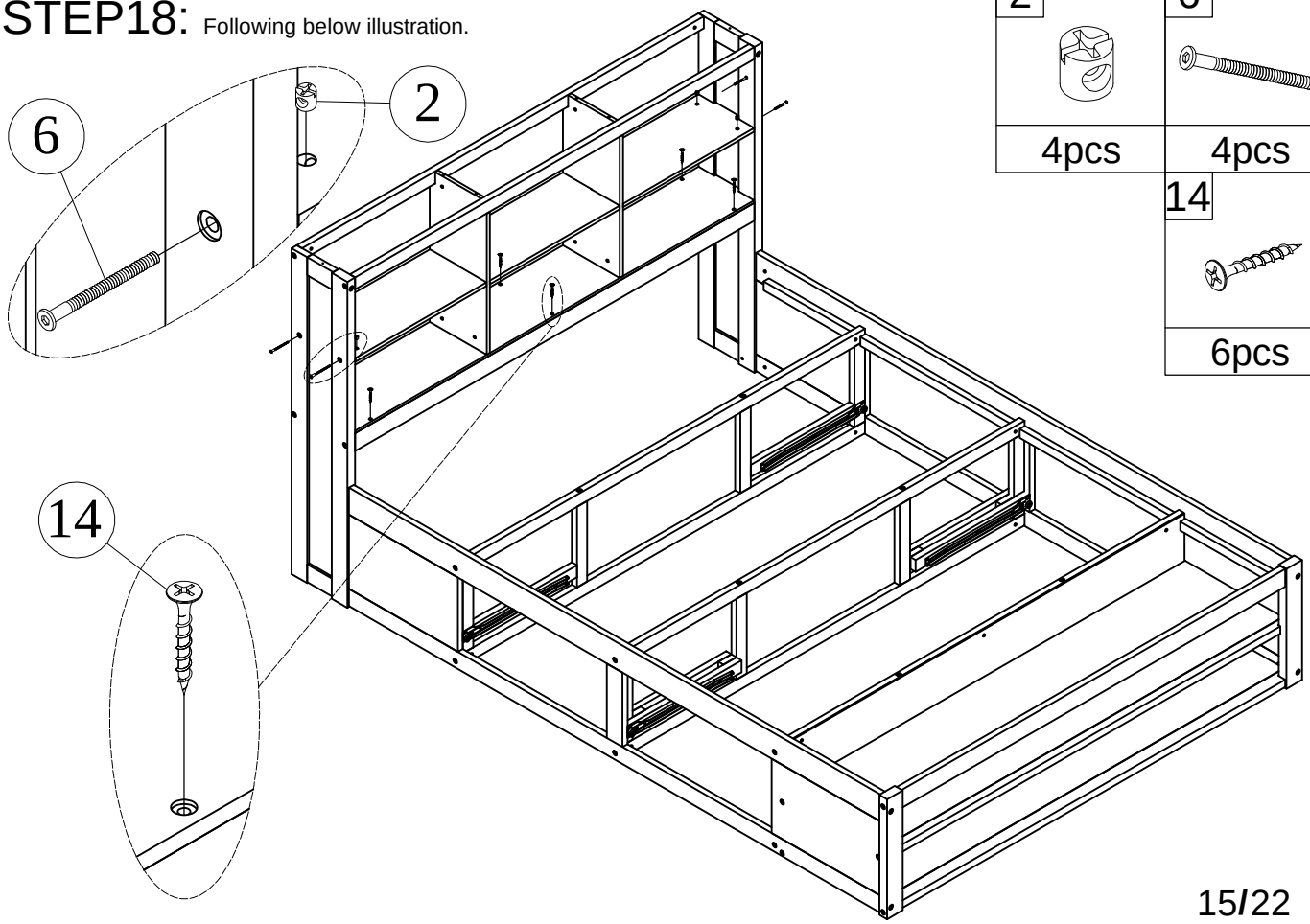

STEP19: Following below illustration.

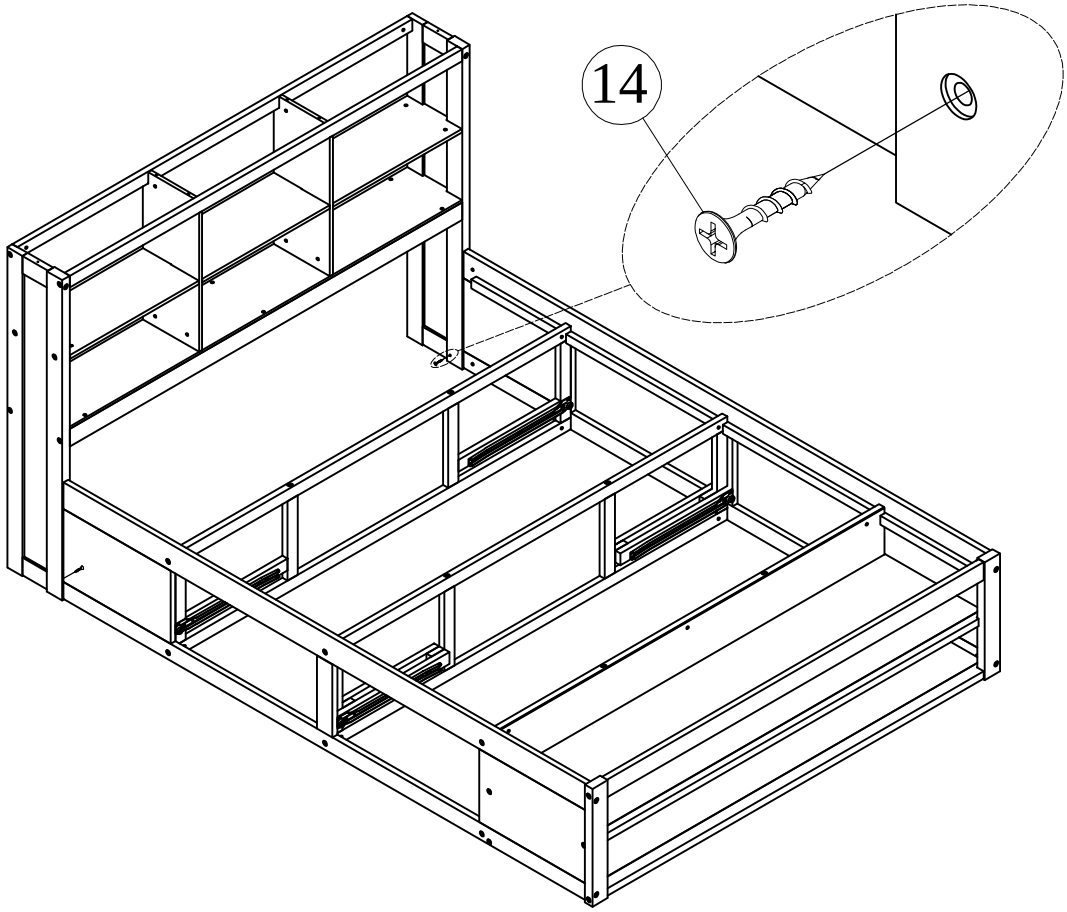

14	
2pcs	

STEP20: Following below illustration.

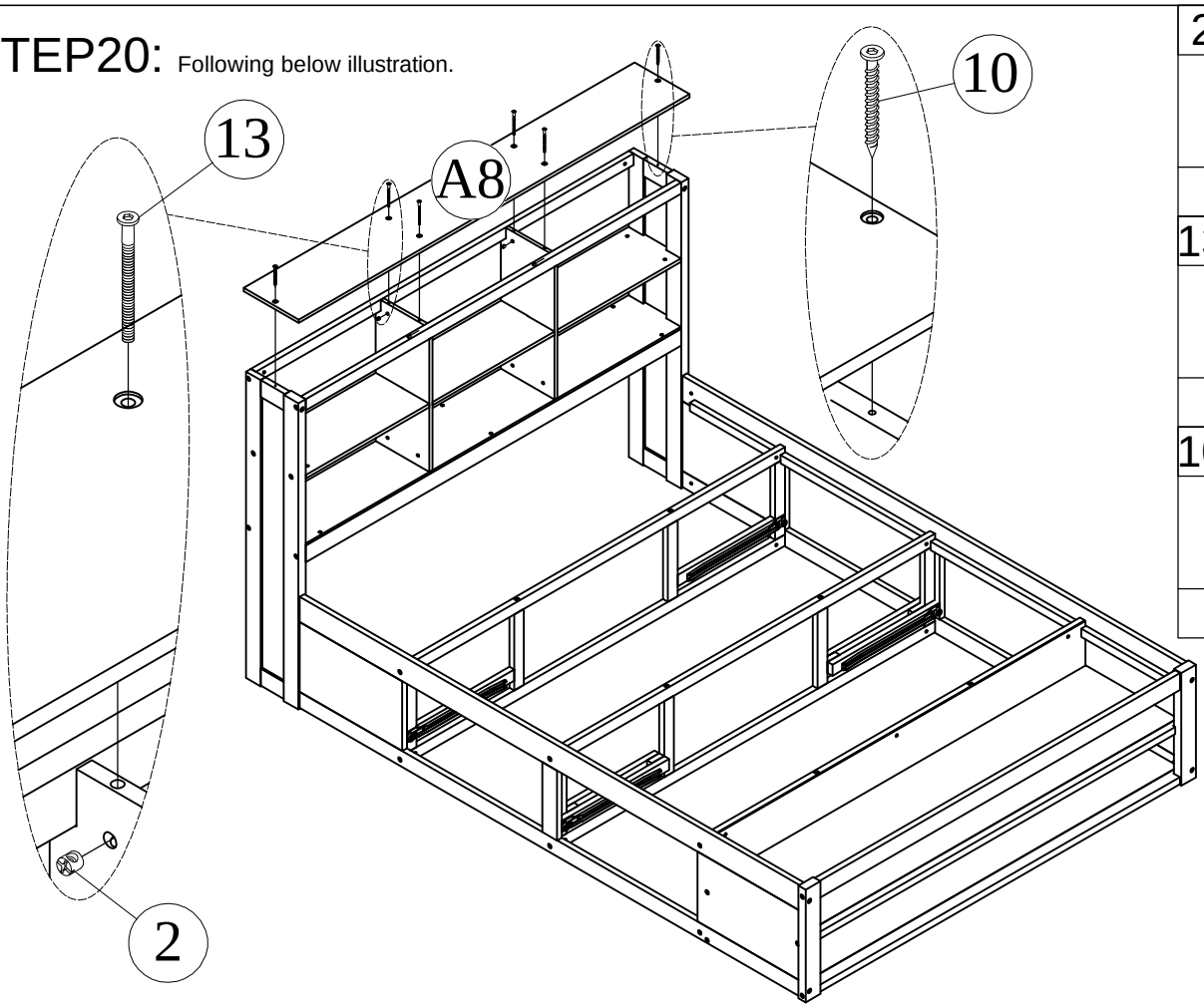

2	
4pcs	
13	
4pcs	
10	
2pcs	

STEP21: Following below illustration.

16

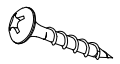

15pcs

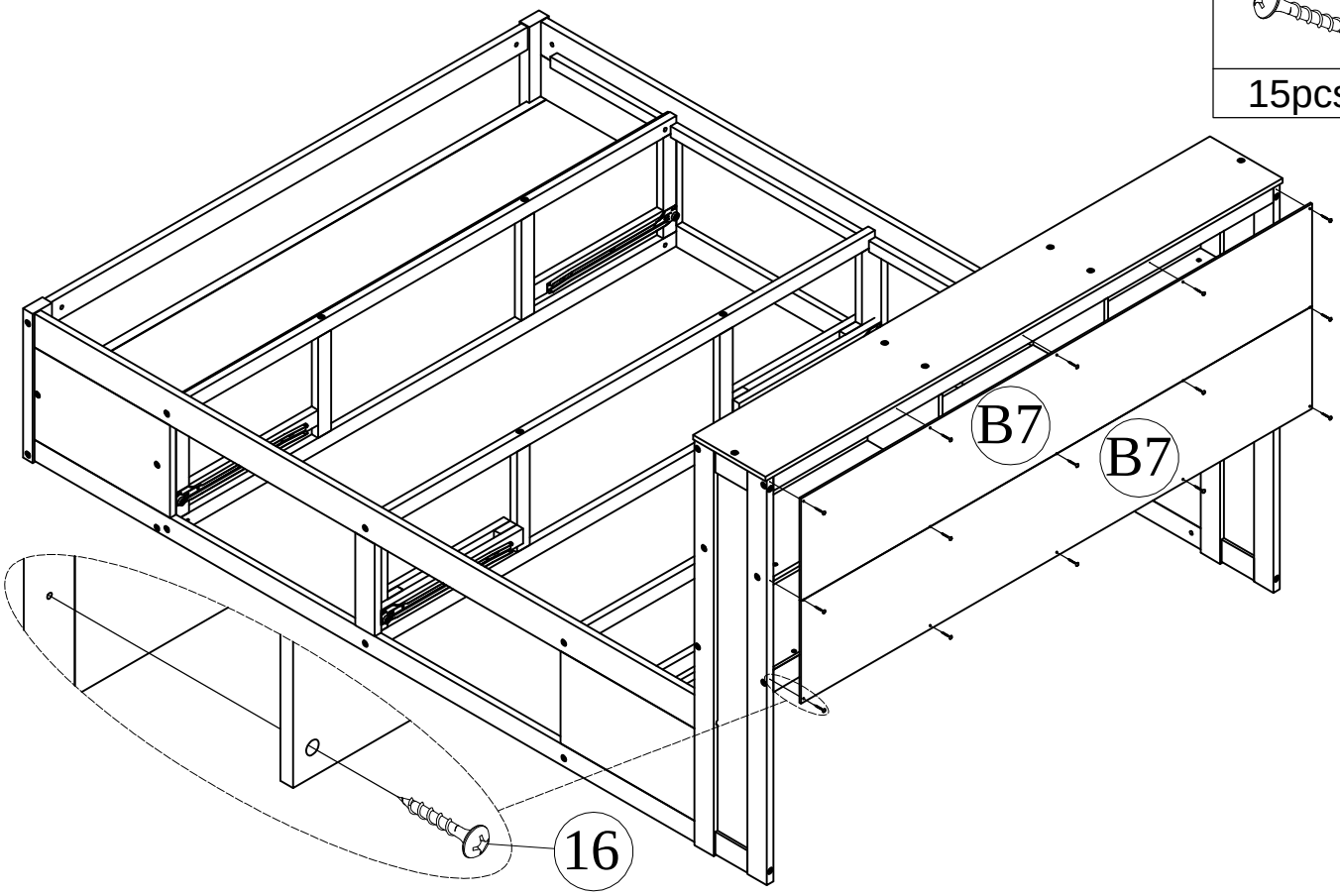

STEP22: Following below illustration.

5

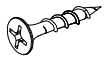

9pcs

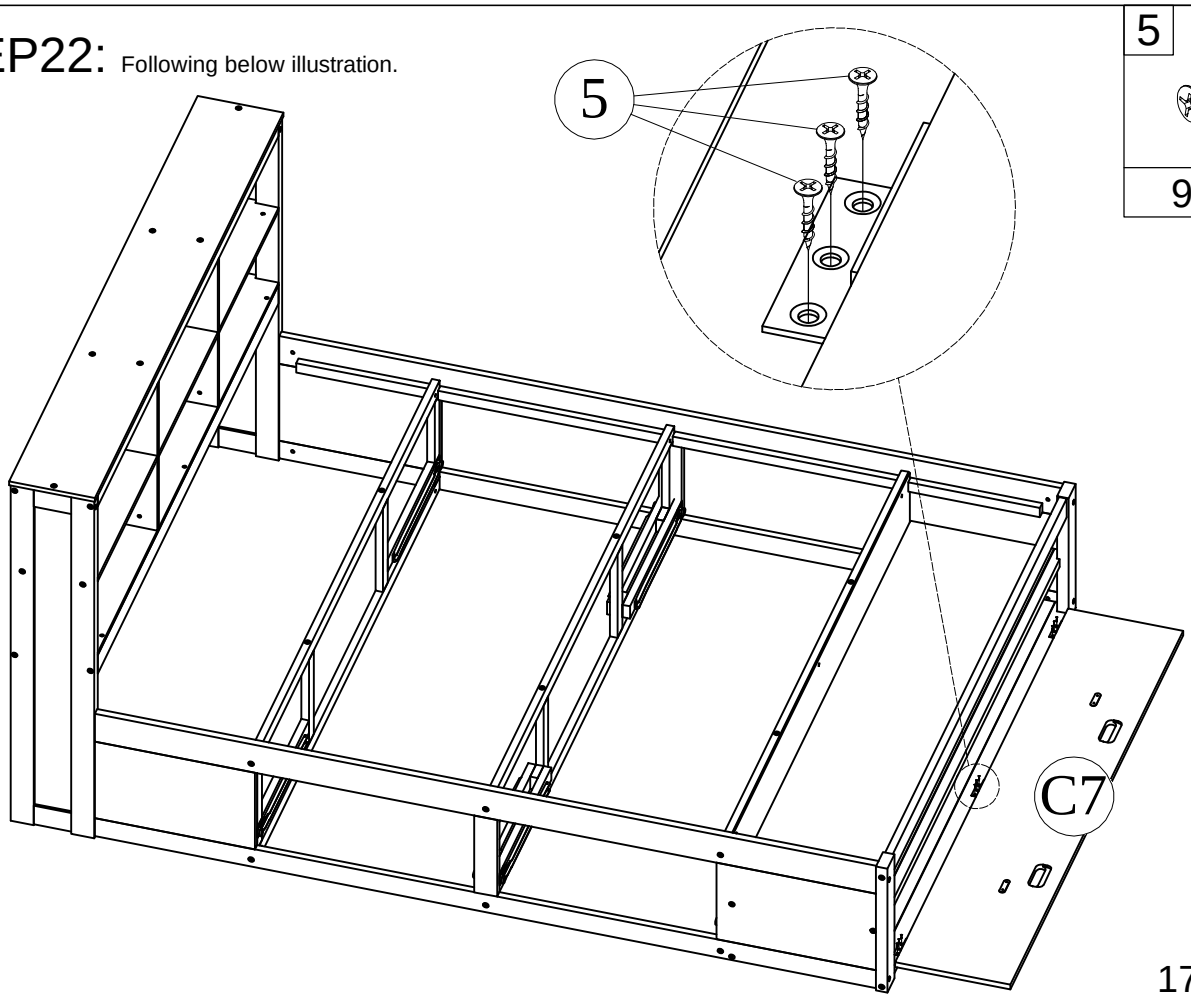

STEP23: Following below illustration.

16	17
4pcs	2pcs

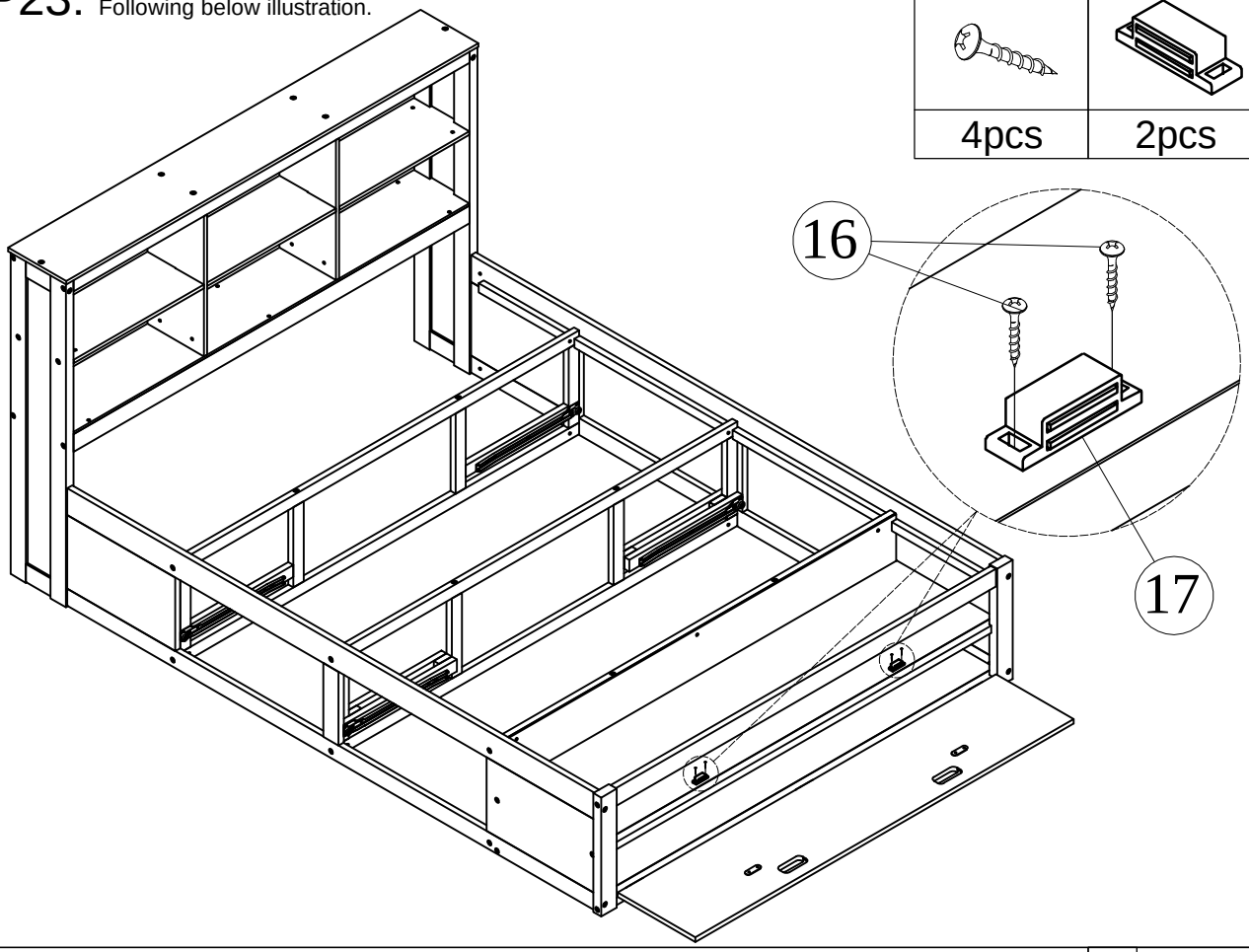

STEP24: Following below illustration.

5
8pcs

8
2pcs

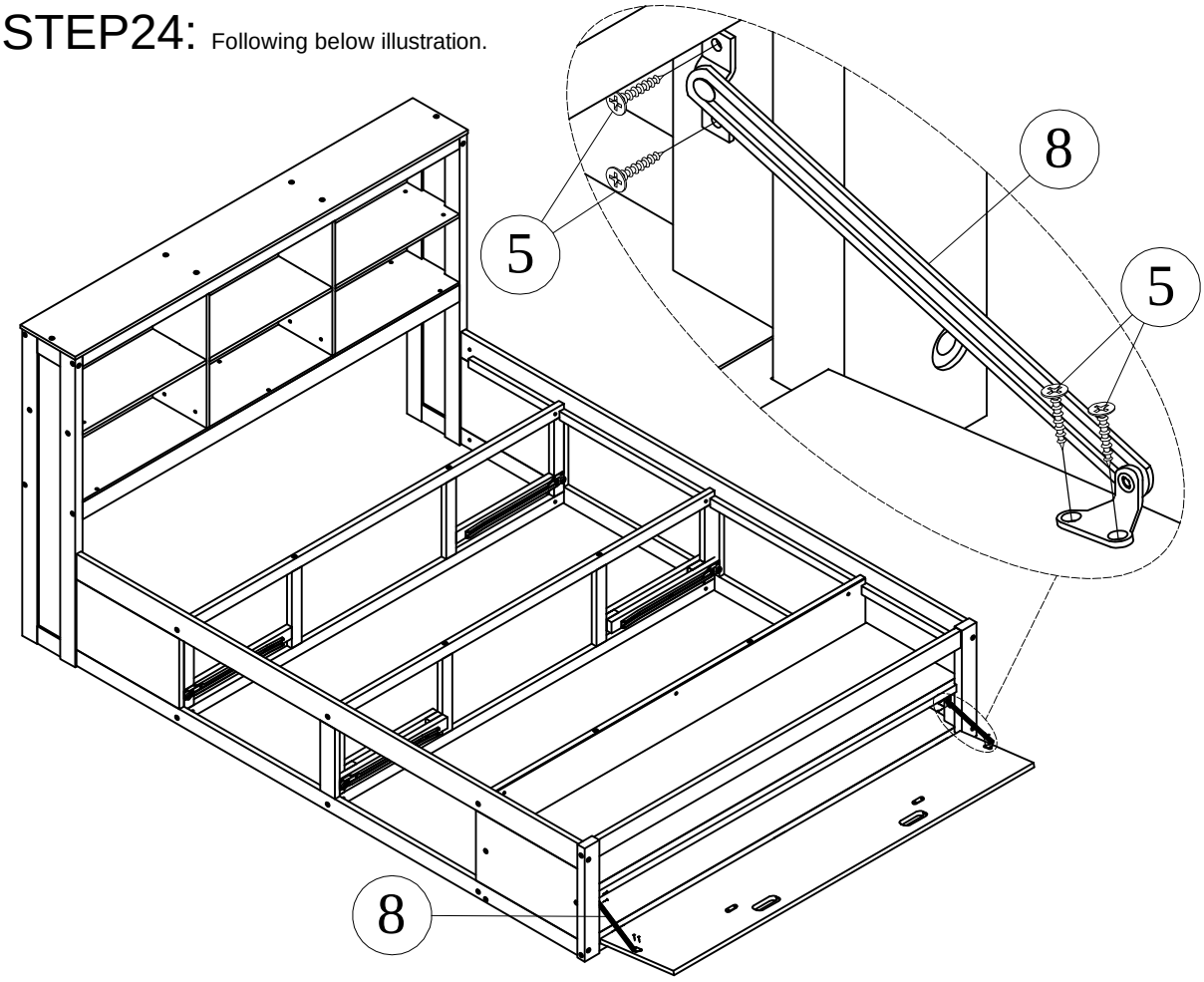

STEP25: Following below illustration.

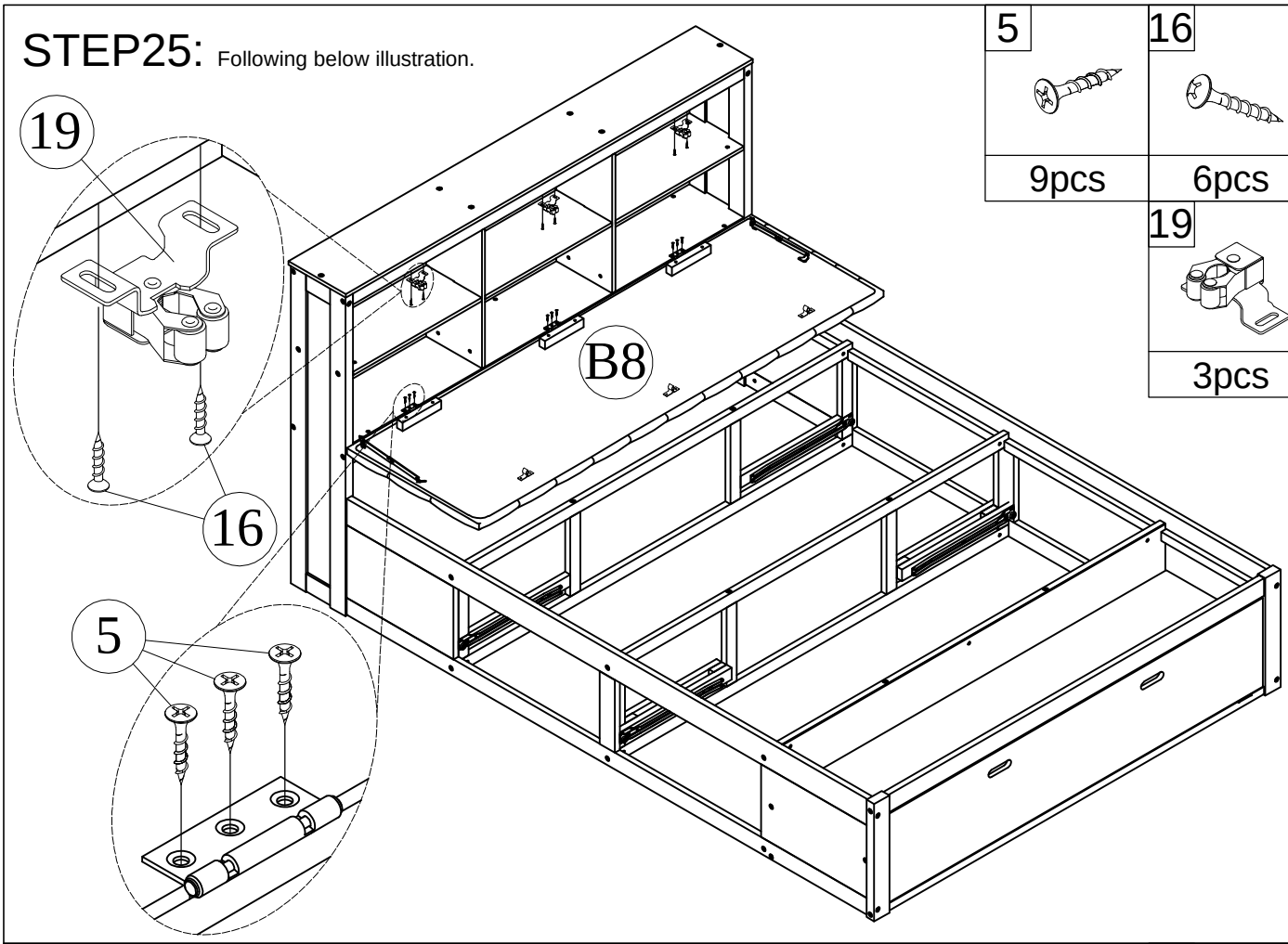

5	16	19
9pcs	6pcs	3pcs

STEP26: Following below illustration.

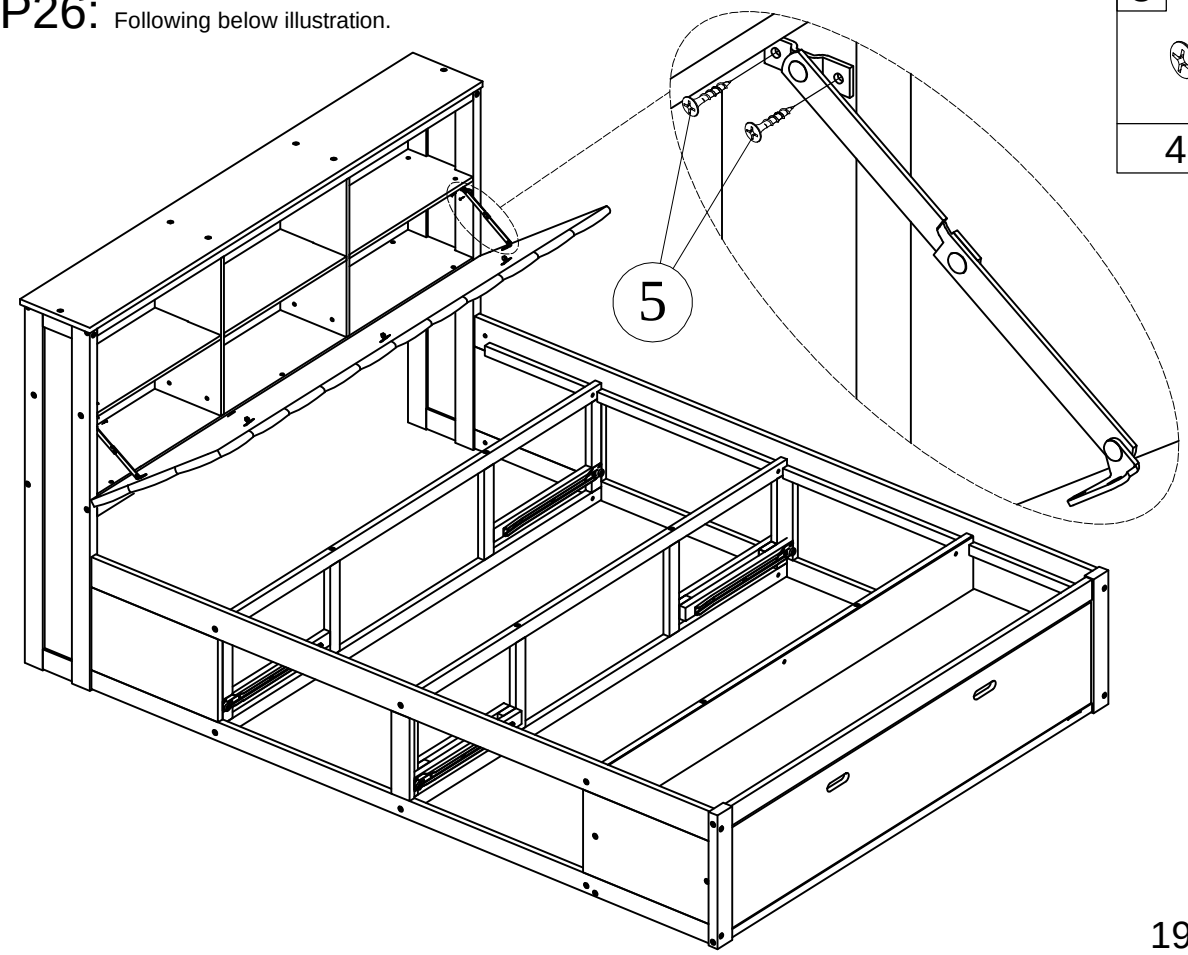

5
4pcs

STEP27:x4 Following below illustration.

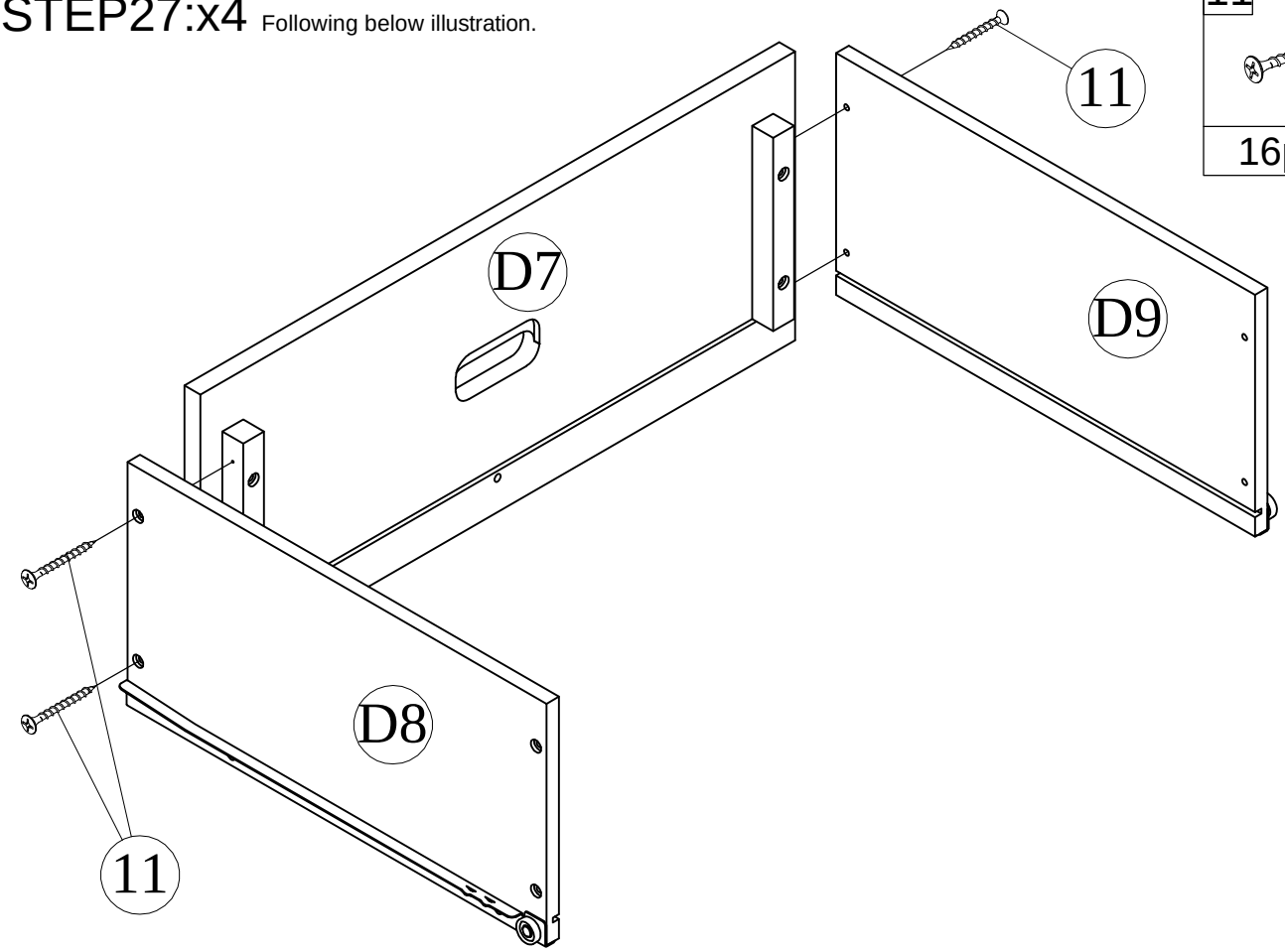

11
16pcs

STEP28:x4 Following below illustration.

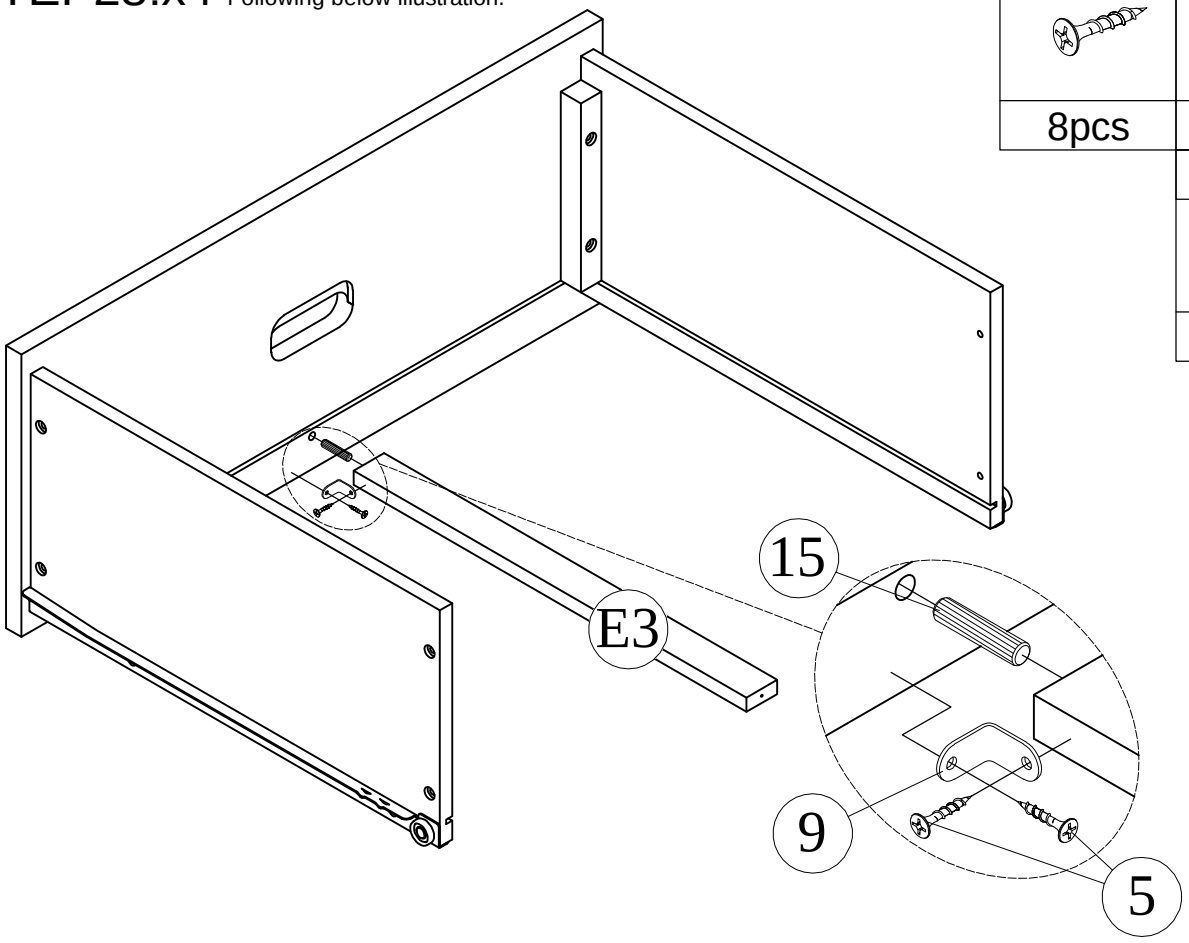

5	15
8pcs	4pcs

9
4pcs

STEP29:x4 Following below illustration.

11

20pcs

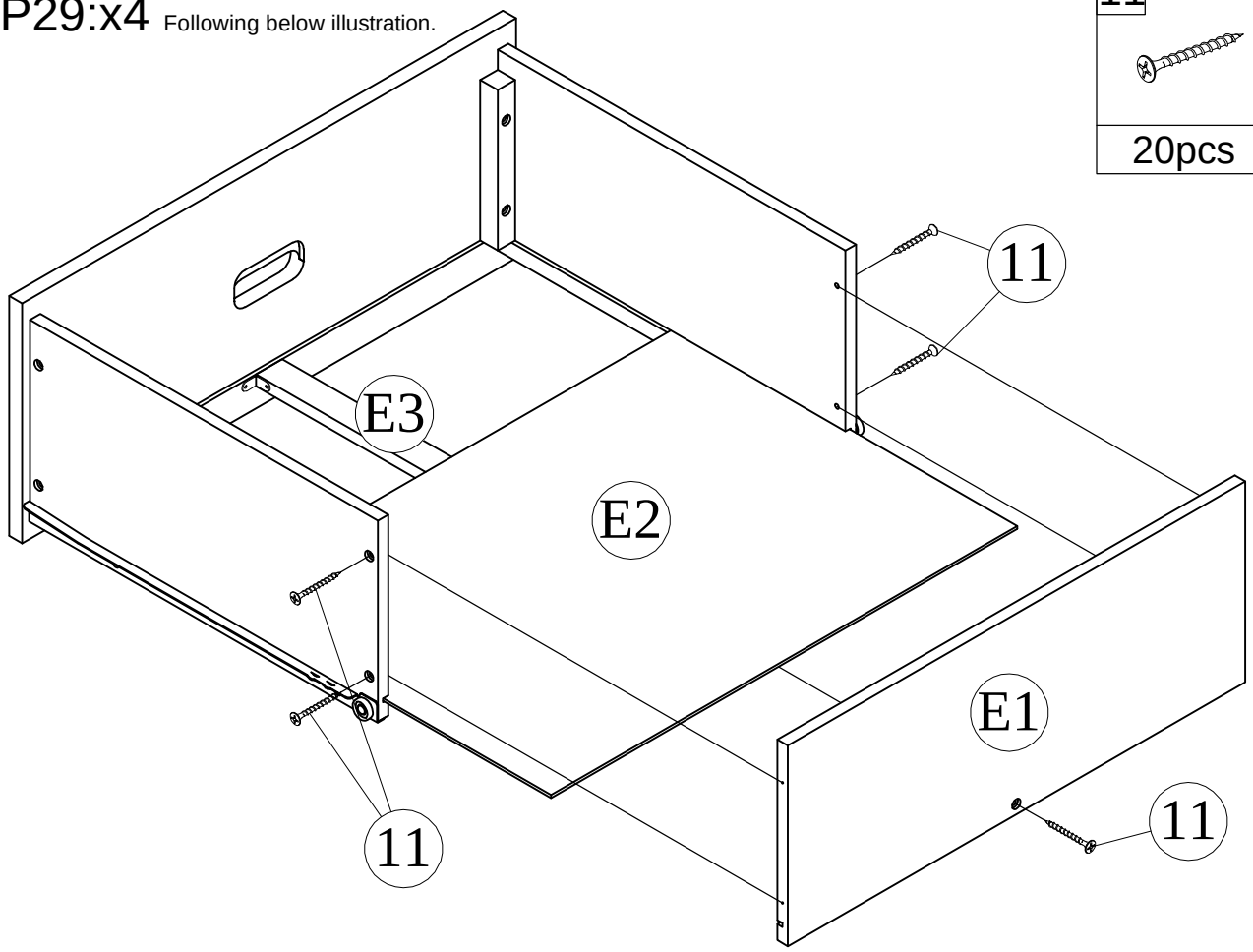

STEP30: Following below illustration.

11

16pcs

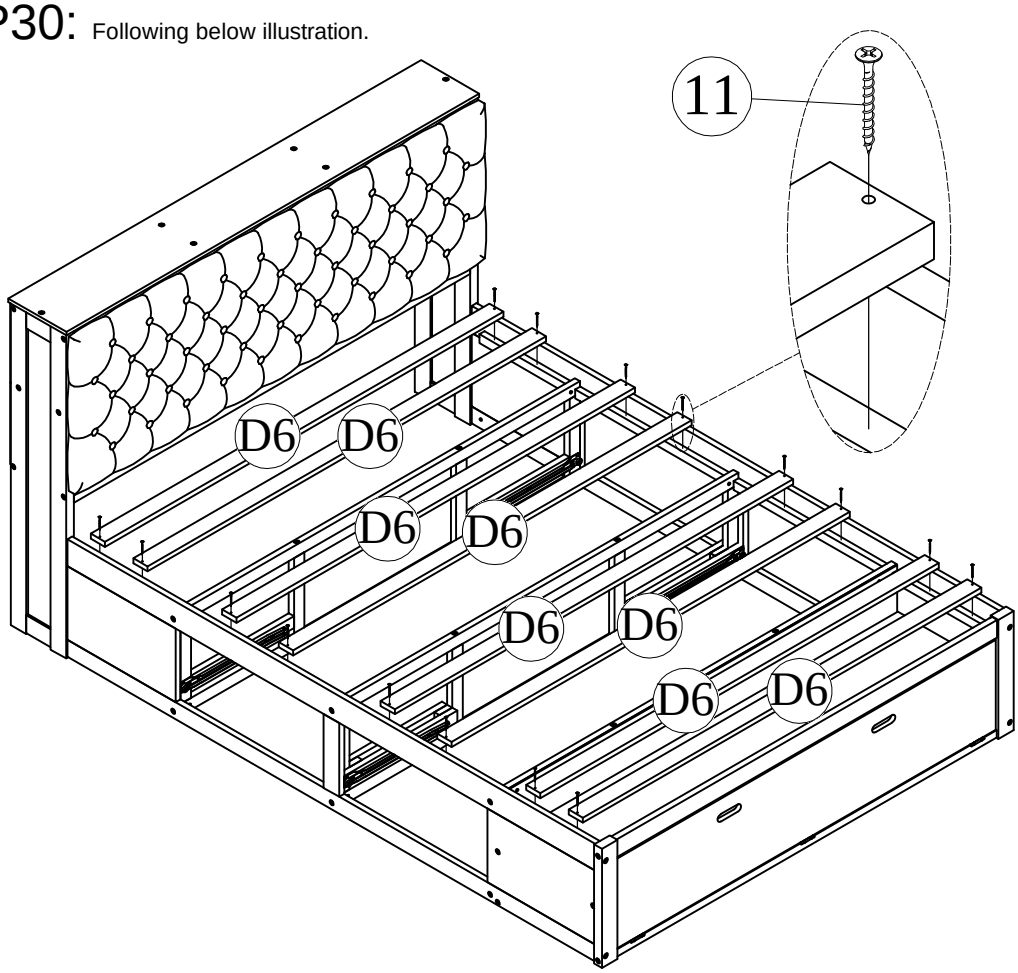

STEP31: Following below illustration.

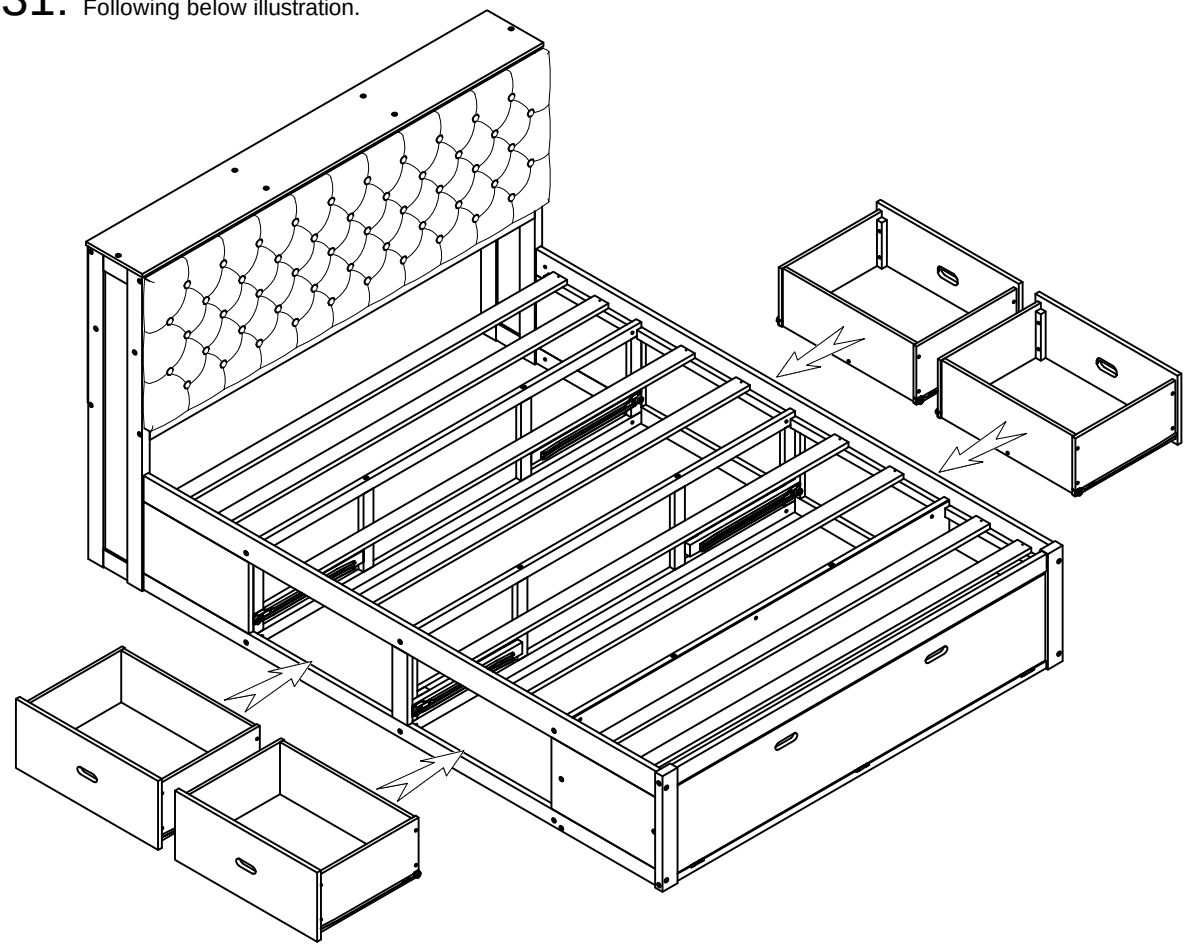
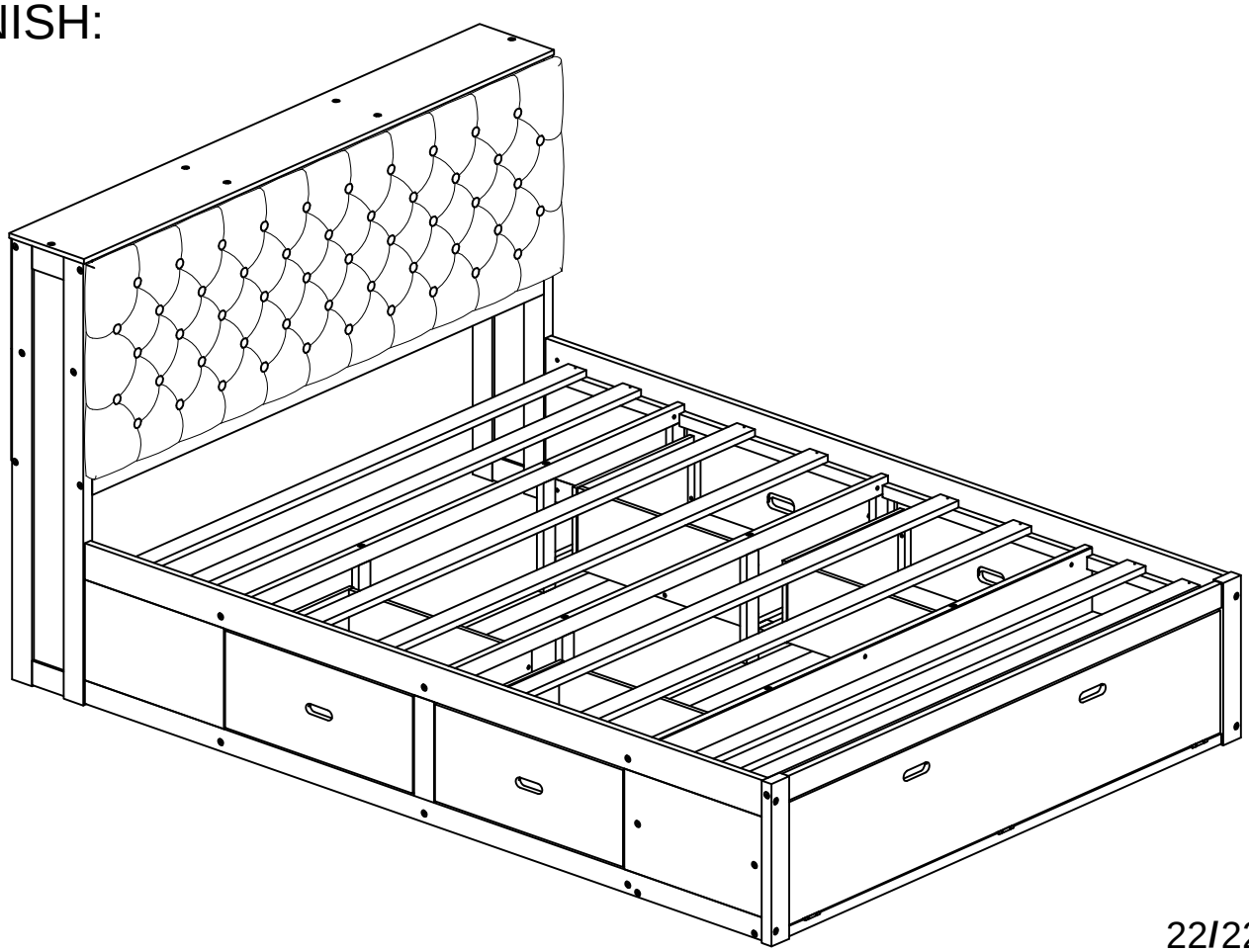
FINISH: