# INSTALLATION MANUAL

## CHANDELIER

Model No.: QLP044G+BRZ-7A



# Safety Rules

**WARNING: BE SURE THE ELECTRICITY TO THE WIRES YOU ARE WORKING ON IS SHUT OFF; EITHER THE FUSE IS REMOVED OR THE CIRCUIT BREAKER IS TURNED OFF. TURNING THE POWER OFF USING THE LIGHT SWITCH IS NOT SUFFICIENT TO PREVENT ELECTRICAL SHOCK.**

**NOTE:** The important safeguards and instructions appearing in this manual are not meant to cover all possible conditions or situations that may occur. It must be understood that common sense, caution, and care, are factors which cannot be built into any product. These factors must be supplied by the person(s) installing this unit.

**READ & SAVE THESE INSTRUCTIONS**

CAUTION: Before assembling the lighting fixture, refer to the section titled Wiring Connections. If you feel you do not have enough electrical wiring experience, either refer to a do-it-yourself wiring handbook or have your lighting fixture installed by a qualified, licensed electrician.

**INSTALLATION & OPERATION INSTRUCTIONS GENERAL**

Before starting the installation, disconnect the power by turning off the circuit breaker or by removing the appropriate fuse at the fuse box. Turning the power off using the light switch is not sufficient to prevent electrical shock.

All electrical connections must be in accordance with local and National Electrical Code (NEC) standards. If you are unfamiliar with proper electrical wiring connections, obtain the services of a qualified electrician.

# Installation Preparation

## Tools You Need



☑ Ladder

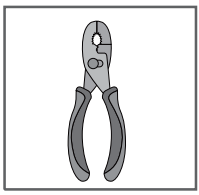

☑ Pliers

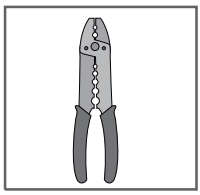

☑ Wire Strippers

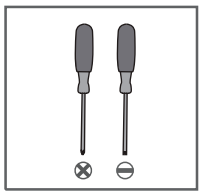

☑ Screwdrivers

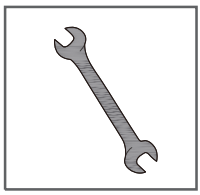

☐ Wrench

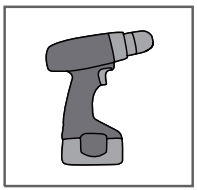

☐ Power Drill (optional)



☐ Drill Bit (optional)

## What to Expect with your Installation




☑ Check the box to see the weight of the light

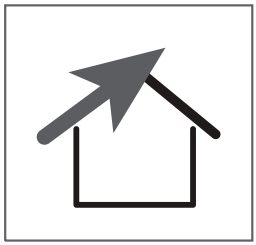

☑ Angled ceiling applicable

# Packing List

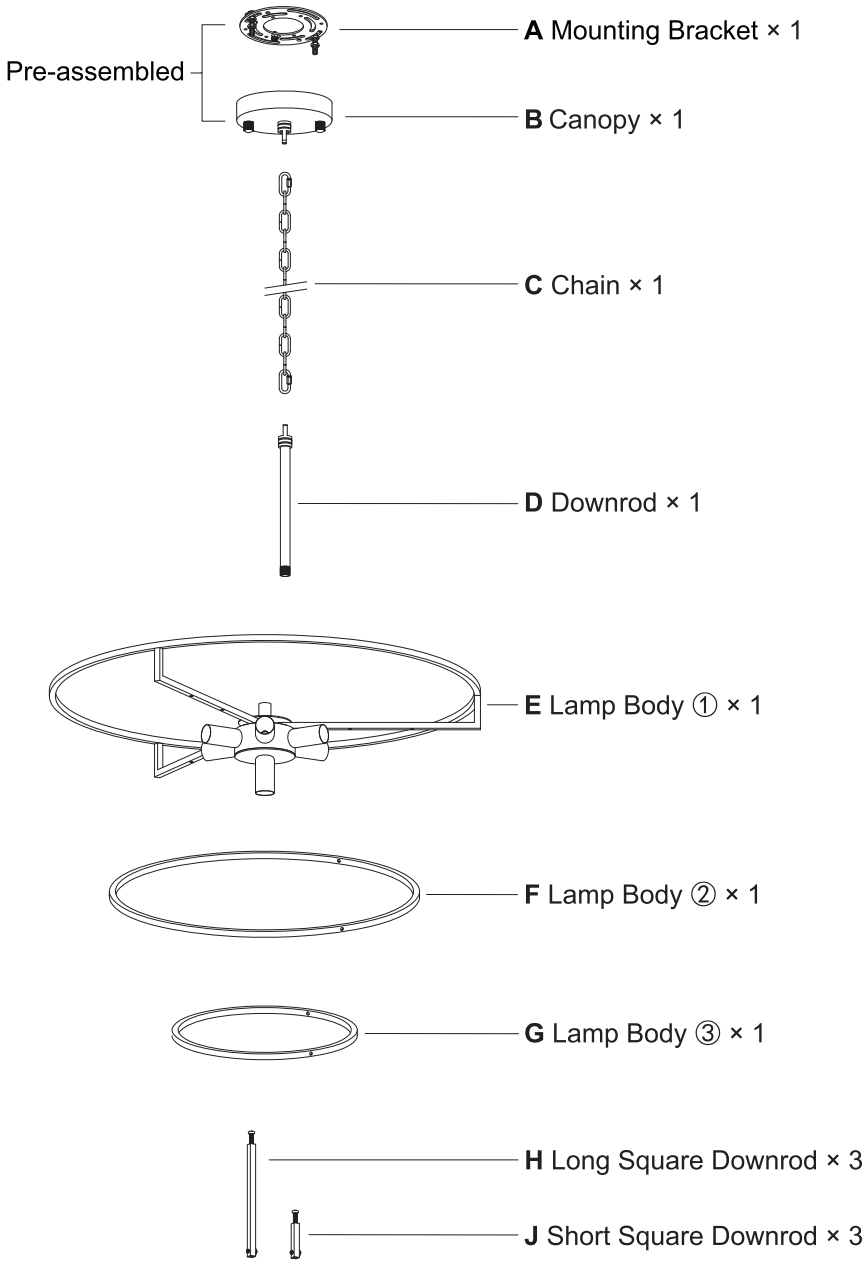

# Installation Kit

| | | | |
|---|---|---|---|
| AA 3x  Wire Nut | BB 2x  Outlet Box Screw | CC 4x  Wood Screw | DD 4x  Washer |
| EE 4x  Plastic Anchor | FF 99x  Glass Panel | GG 1x  Gloves | |

NOTE:
1. The listed quantity is for installation, extra hardware may be included.
2. The mounting bracket (A) is pre-assembled on the canopy (B).

# Installation Instructions

## 1. Remove the Mounting Bracket

Remove the knurled nut from the canopy (B), and take out the mounting bracket (A).

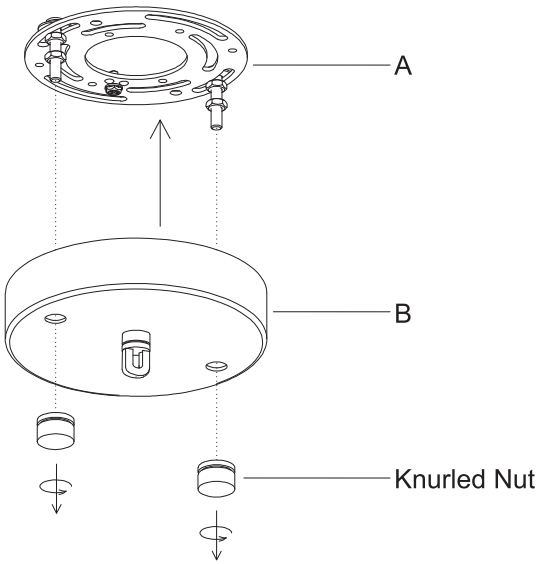

## 2. Mount the Bracket (3 Options)

### Option1. (For Outlet Box)

Secure the mounting bracket (A) to the outlet box with screws taken off from outlet box or screws (BB) provided.

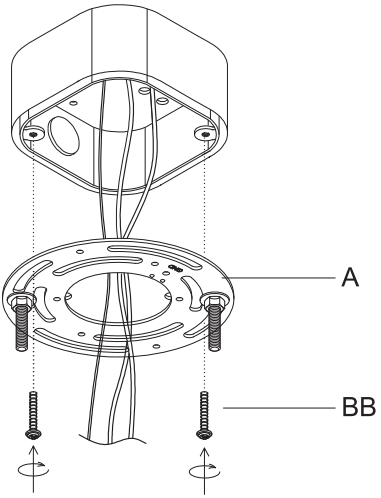


### Option 2. (For Solid Wood Structure)

Mark and drill the screw holes on the solid wood structure. Mount the mounting bracket with wood screws (CC) and washers (DD).

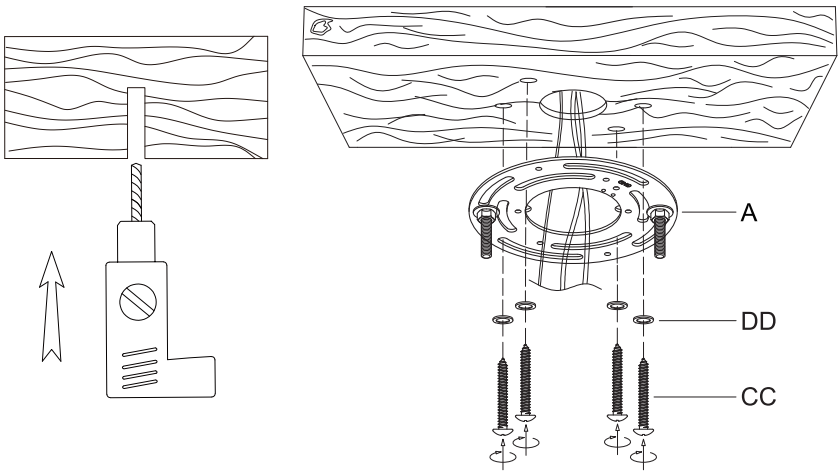

**Option 3. (For Concrete Structure)**
Mark and drill the anchor holes on the concrete structure, and then insert the plastic anchors (EE). Mount the mounting bracket to the concrete structure with wood screws (CC) and washers (DD).

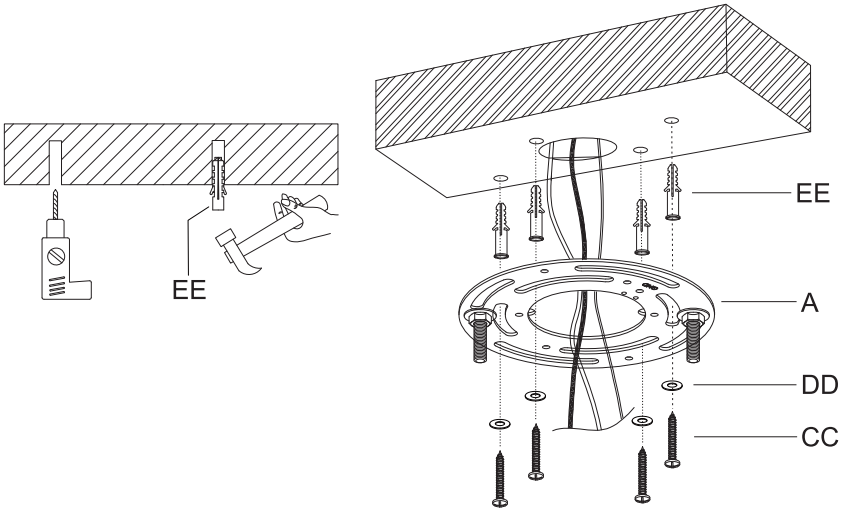


## 3. Install the Lamp Body

Step 1: Remove the long screws and short screws from long square downrod (H) and short square downrod (J).

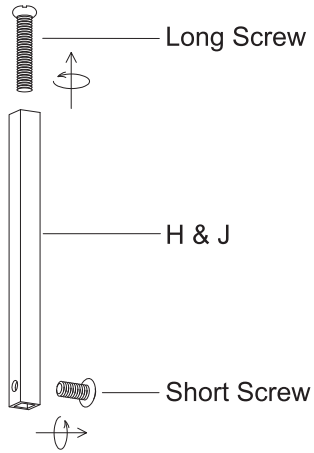

Step 2: Use long screws and short screws to secure the long square downrods (H) to the lamp body ① (E) and lamp body ③ (G) respectively.

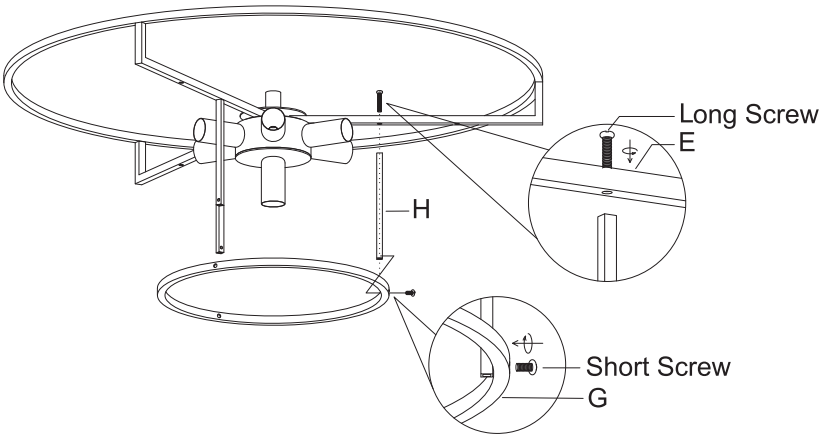


Step 3: Use long screws and short screws to secure the short square downrods (J) to the lamp body ① (E) and lamp body ② (F) respectively.

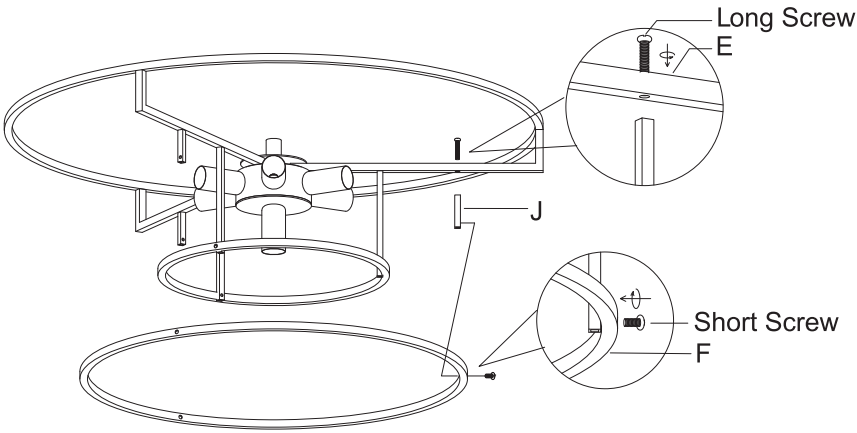

## 4. Install the Chain

Step 1: Thread the supply wire through the downrod (D), chain (C) and canopy (B).
Step 2: Secure the downrod (D) to the lamp body ① (E).
Step 3: Connect the quick links at both ends of the chain (C) onto the canopy loop and the downrod loop.

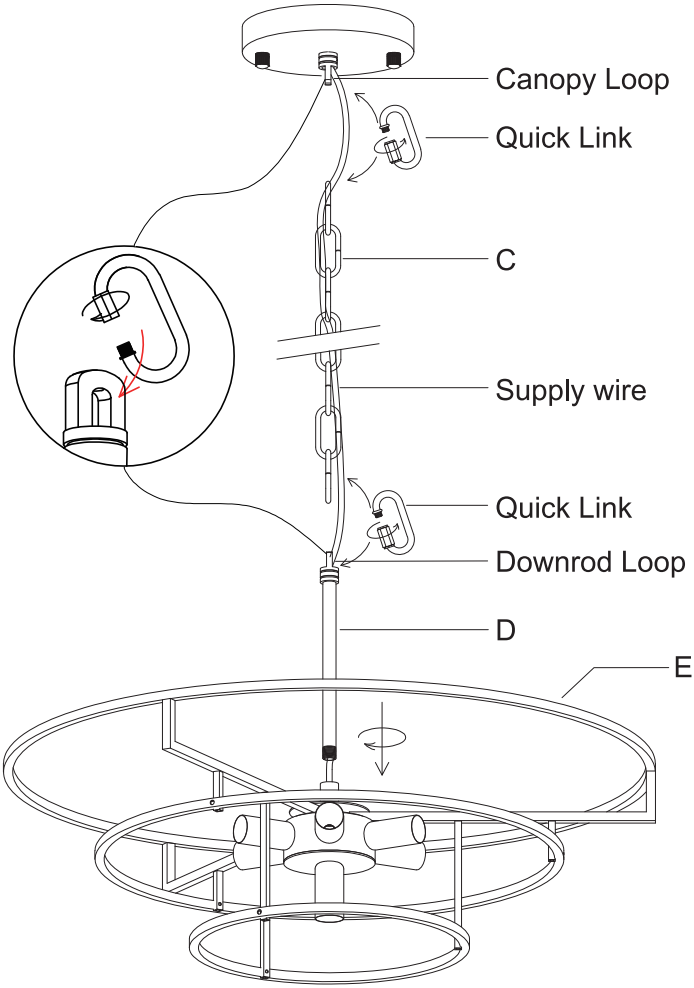

## 5. Connect the Wire

Connect the wires from the fixture to the house supply wires with wire nuts (AA), ground wire (green, green / yellow, or bare copper) to ground wire, neutral wire (white) to neutral wire, and hot wire (black) to hot wire. Wrap the connection with electrical tape.

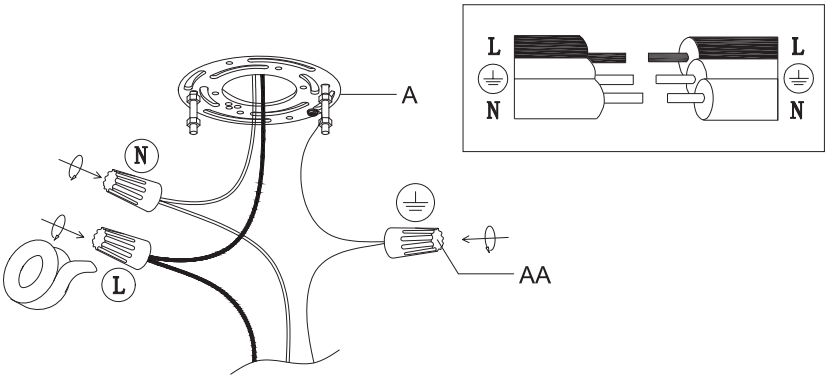


## 6. Fix the Canopy

Attach the canopy (B) to the mounting bracket (A), then secure with knurled nuts.

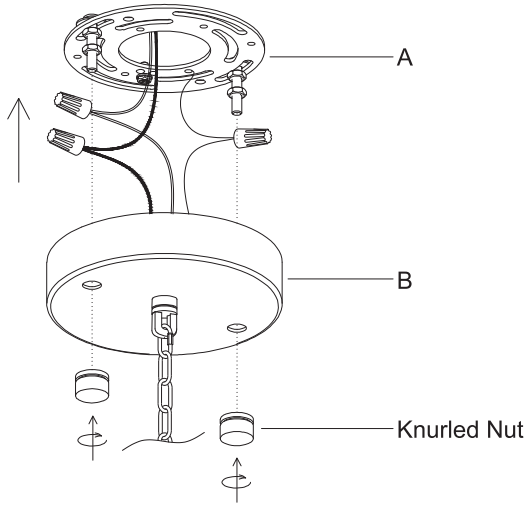

## 7. Install the Bulb

Install Bulbs (E12 Bulbs x 7, max 40W each, not included).

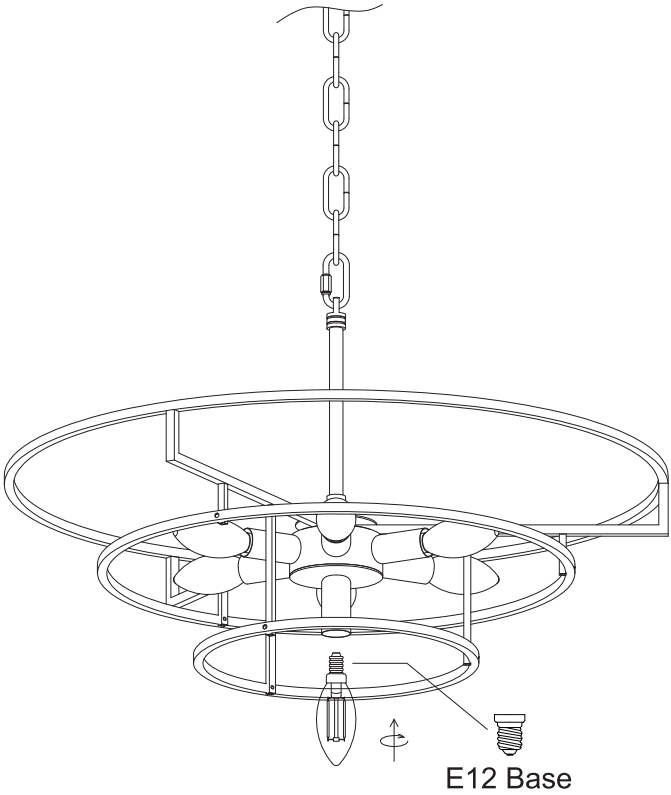


**Note:**

1. The illustrated bulb is recommended and compatible alternatives may be selected as needed.
2. To achieve dimming functionality, you need to use dimmable bulbs and a dimmer switch.
3. For bulbs with color temperature control, repeatedly switch “on” and “off” using the wall switch to change settings.

## 8. Install the Glass Panel

Hang the glass panels (FF) in sequence from lamp body ③ (G) to lamp body ① (E).

Note: The quantity of glass panel pieces is for reference only. You may arrange them according to your preference.

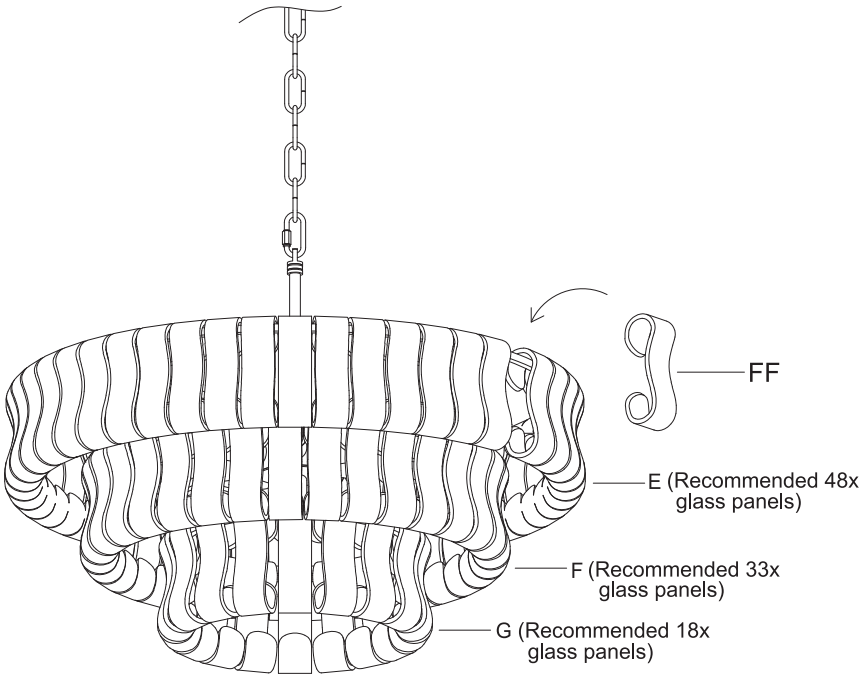

## Trouble Shooting

**1. Missing / Broken Parts**

· Make a list of the missing/broken parts according to the packing list, take photos for broken parts, then email us for free replacements.

**2. Bulbs Do Not Light Up**

· Check your power and switch to make sure it's power on.
· For regular bulbs, make sure it is connected to the ON/OFF wall switch, not the dimmer switch.
· Replace the bulb with a new one.

**3. Bulbs Flicker**

· If it is a dimmer switch, use a dimmable bulb.
· Replace the bulb with a new one.

**4.Could Not Install / Assemble**

· Take photos of the ceiling / fixture, contact seller for technical support.

## Clean And Care

To clean, wipe the fixture with a soft cloth. Spraying from chemical cleaners can discolor the finish of the fixture.
Do not use scouring pads, powders, steel wool, or abrasive paper to clean this fixture.

## Ordering Parts

Keep this manual for future reference, and in case replacement parts are needed. Available parts can be ordered from the place of purchase. Use exact wording from diagrams when ordering parts.