Installation & Assembly

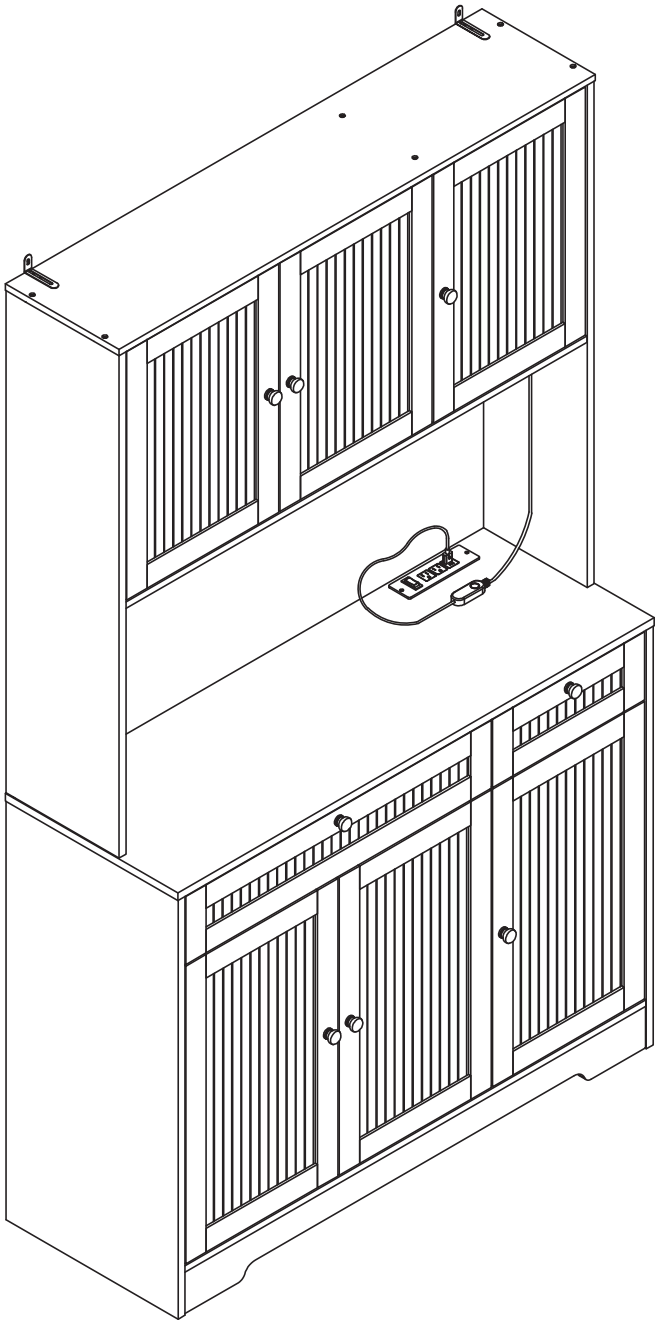

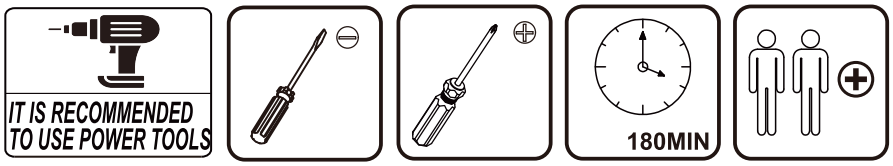

***EN*_IMPORTANT, RETAIN FOR FUTURE REFERENCE: READ CAREFULLY.**

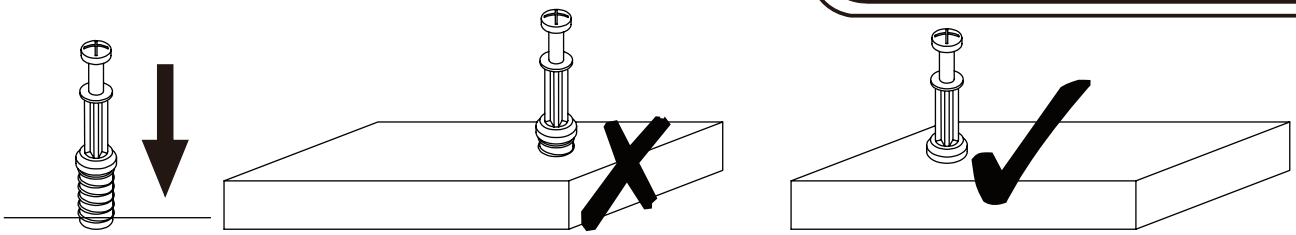

EN_QUICKFIT: Tighten quickfit until shoulder is flush with panel.Do not overtighten or undertighten.

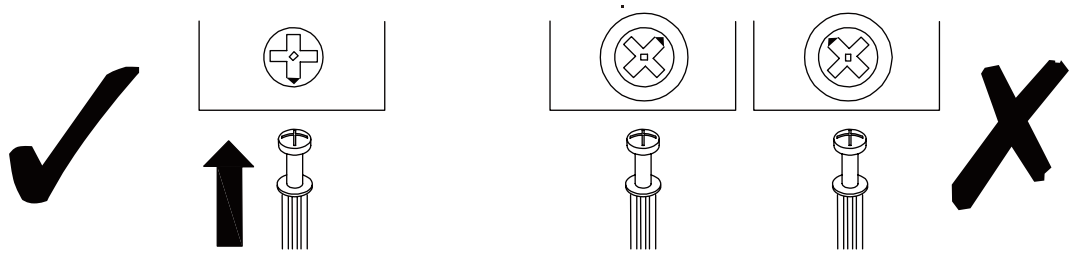

EN_CAM LOCK: When fitting cam lock, ensure starting position is correct before you insert connecting quickfit.

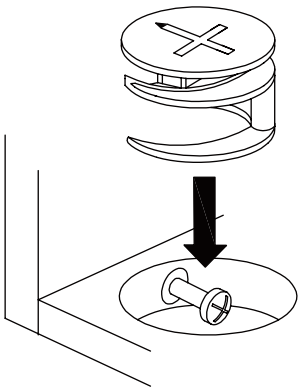

EN_ Quickfit head should be in the centre of the cam lock when the two panels are joined.
Cam lock should be inserted before quickfit.

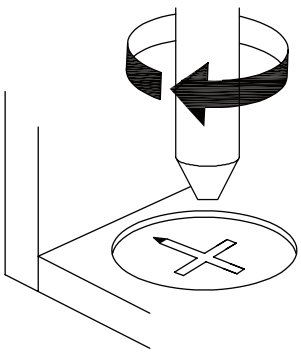

EN_ Turn cam lock clockwise to tighten.

PACKING DELALS

NO.	PARTS	QTY	SPARE
①	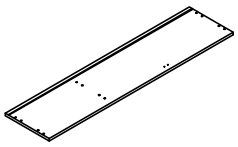	x1	
②	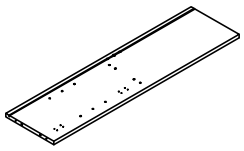	x1	
③	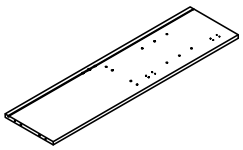	x1	
④	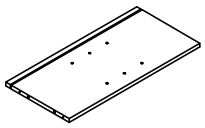	x1	
⑤	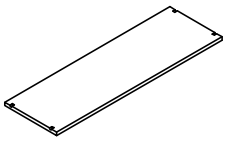	x1	
⑥	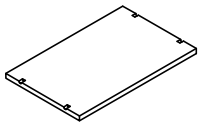	x1	
⑦	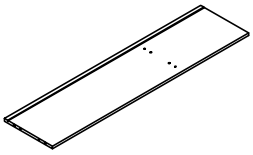	x1	
⑧	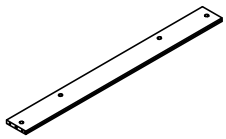	x1	
⑨	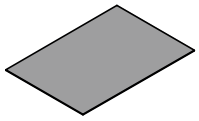	x2	
⑩	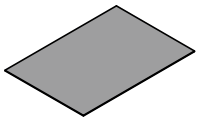	x1	
⑪	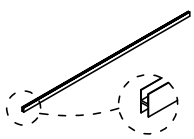	x1	

NO.	PARTS	QTY	SPARE
⑫	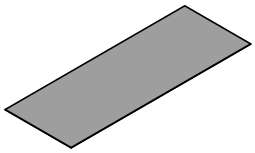	x1	
⑬	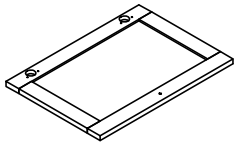	x3	
⑭	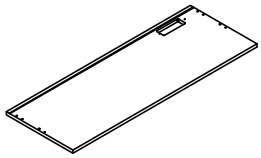	x1	
⑮	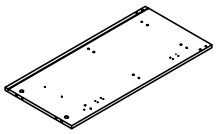	x1	
⑯	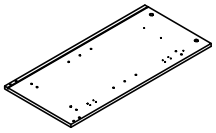	x1	
⑰	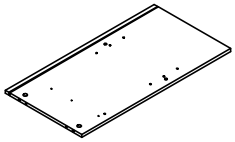	x1	
⑱	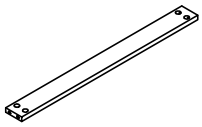	x1	
⑲	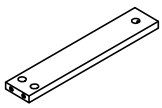	x1	
⑳	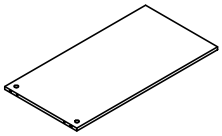	x1	
㉑	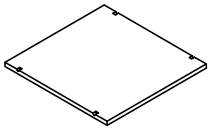	x1	
㉒	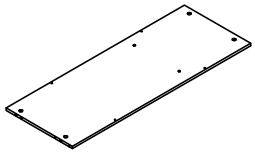	x1	

NO.	PARTS	QTY	SPARE
23	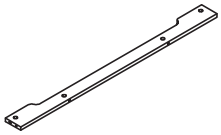	x1	
24	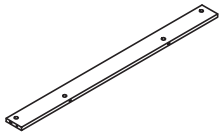	x1	
25	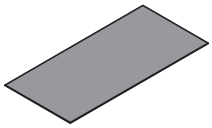	x2	
26	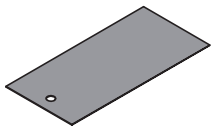	x1	
27	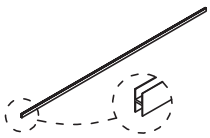	x1	
28	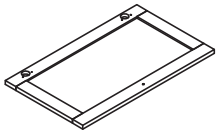	x3	
29	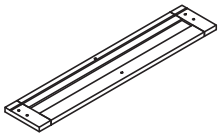	x1	
30	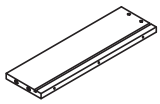	x2	
31	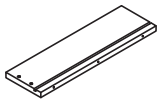	x2	
32	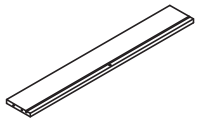	x1	
33	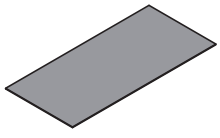	x1	

NO.	PARTS	QTY	SPARE
34	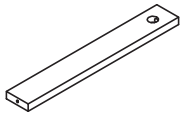	x1	
35	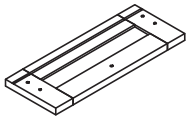	x1	
36	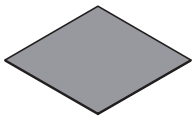	x1	
37	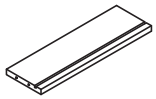	x1	
	 Hardware Kit	x1	

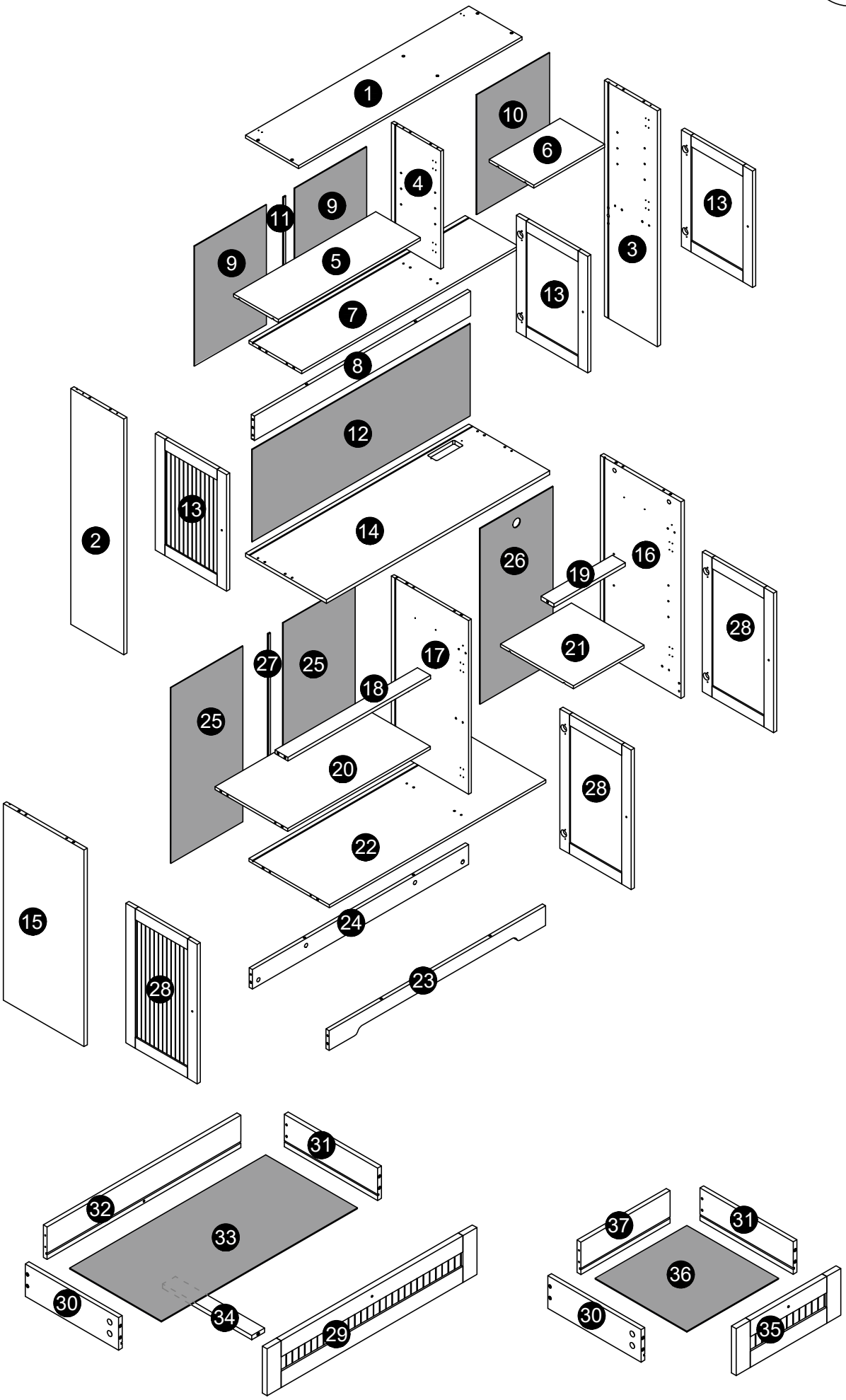
1
10
6
4
9
11
9
5
7
8
12
13
2
13
14
26
16
19
28
21
27
25
17
18
25
20
28
22
15
24
28
23
31
32
33
30
34
29
37
31
36
30
35

HARDWARE

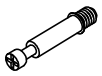 A x44 Ø6x35mm +3(spare)	 B x44 Ø15x10mm +3(spare)	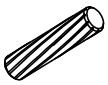 C x40 Ø6x30mm +4(spare)	 D x27 Ø4x35mm +2(spare)	 E x96 Ø3.5x12mm +5(spare)	 F x8  F-1 F-2
G x12 	 H x1	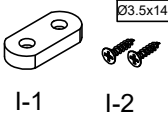 I x1 Ø3.5x14mm I-1 I-2	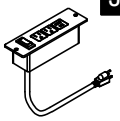 J x1	 K x2 Ø3.5x12mm	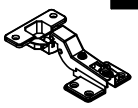 L x4
 M x20 Ø3x16mm +2(spare) M-1  M-2	 N x4 Ø3x12mm N-1  N-2	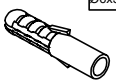 O x2 Ø6x30mm	 P x2 Ø4x12mm P-1 P-2	 Q x2	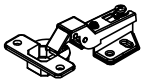 R x8
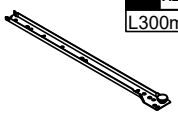 CL x2 L300mm	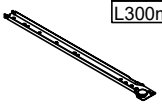 CR x2 L300mm	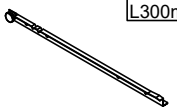 DL x2 L300mm	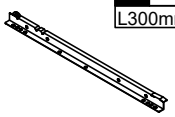 DR x2 L300mm		

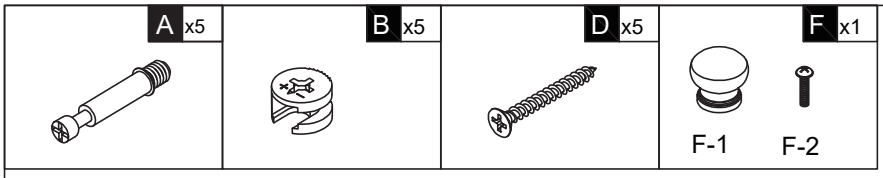
A x5
B x5
D x5
F x1
F-1
F-2

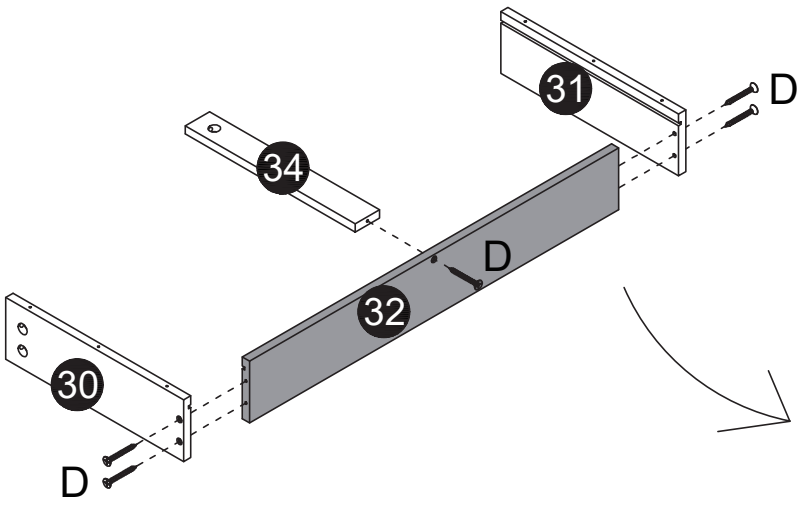
31
D
34
D
32
30
D

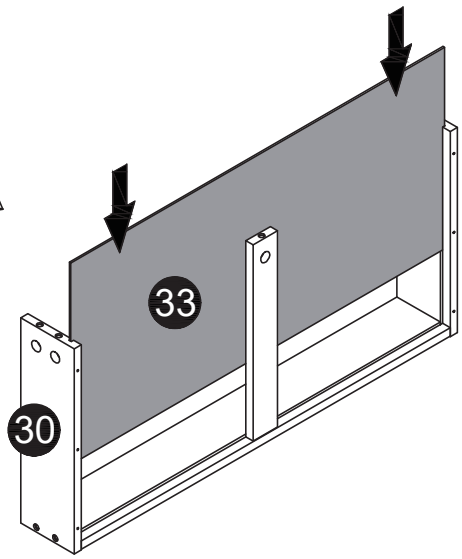
33
30

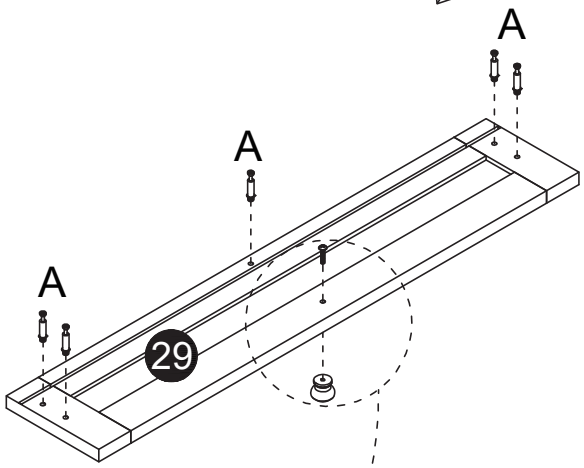
A
A
A
29

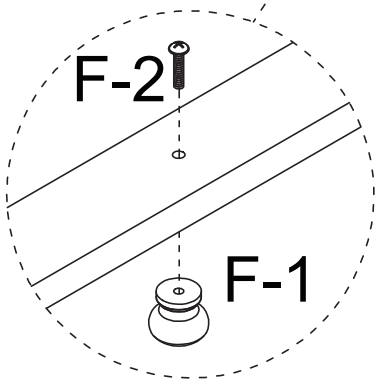
F-2
F-1

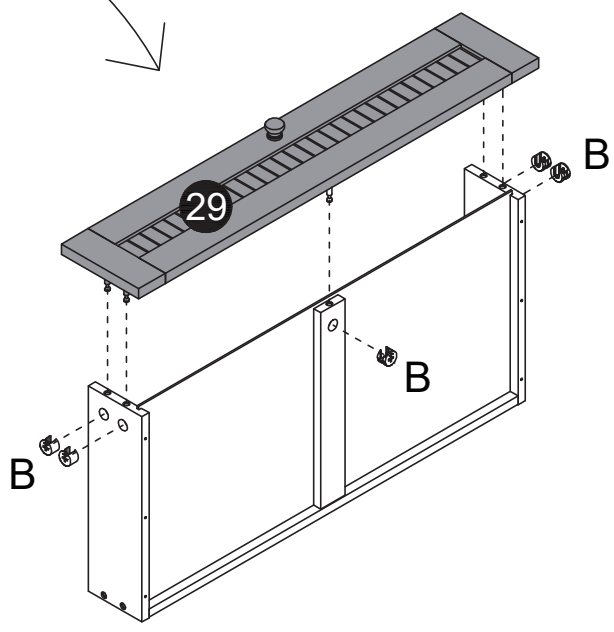
29
B
B
B

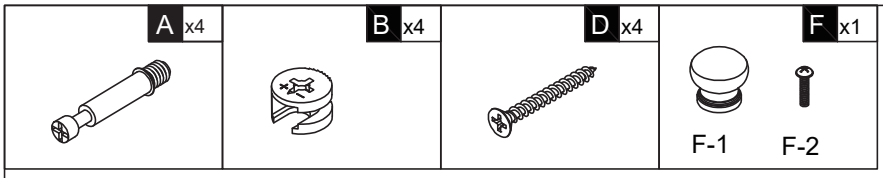
A x4
B x4
D x4
F x1
F-1
F-2

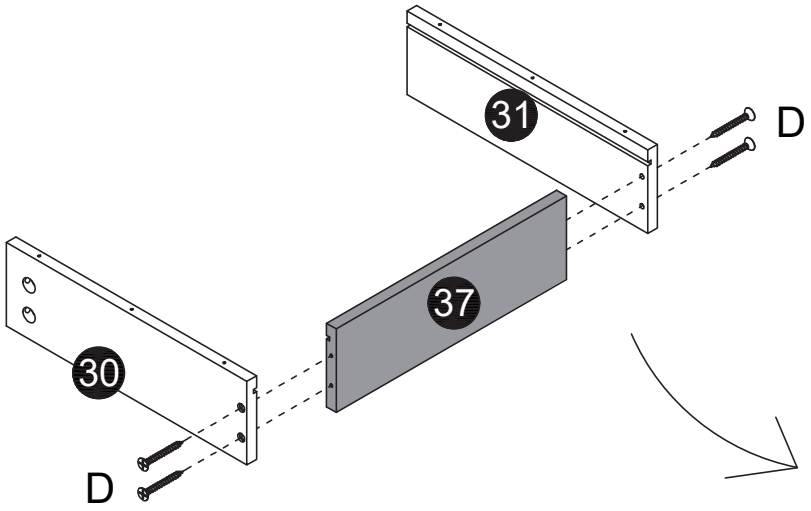
31
D
37
30
D

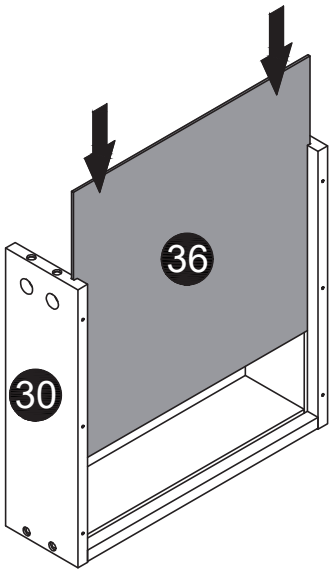
36
30

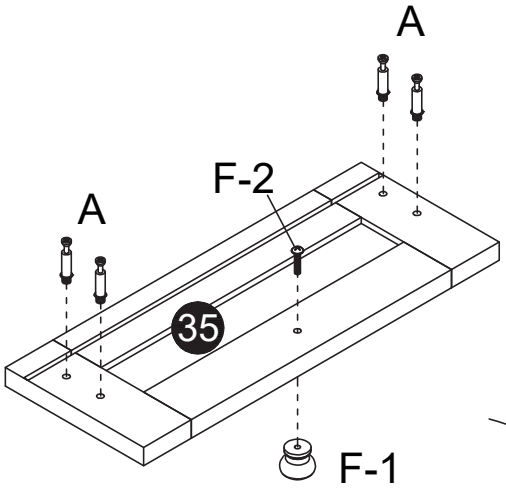
A
A
F-2
35
F-1

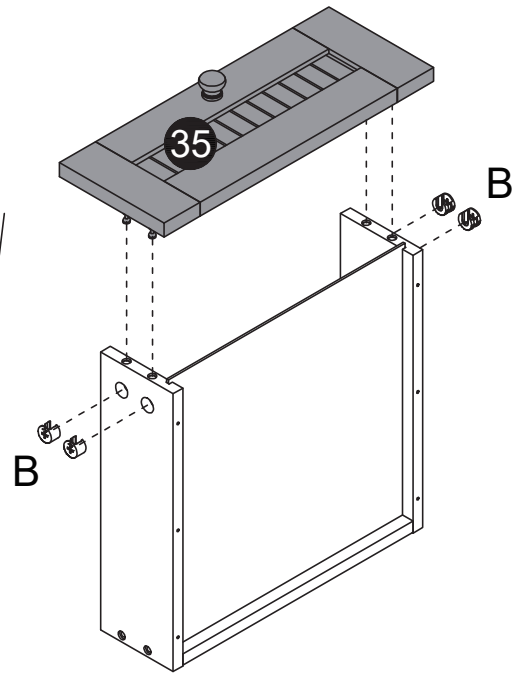
35
B
B

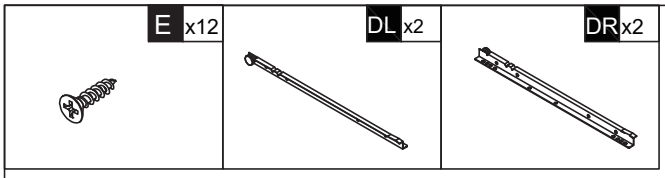
E x12
DL x2
DR x2

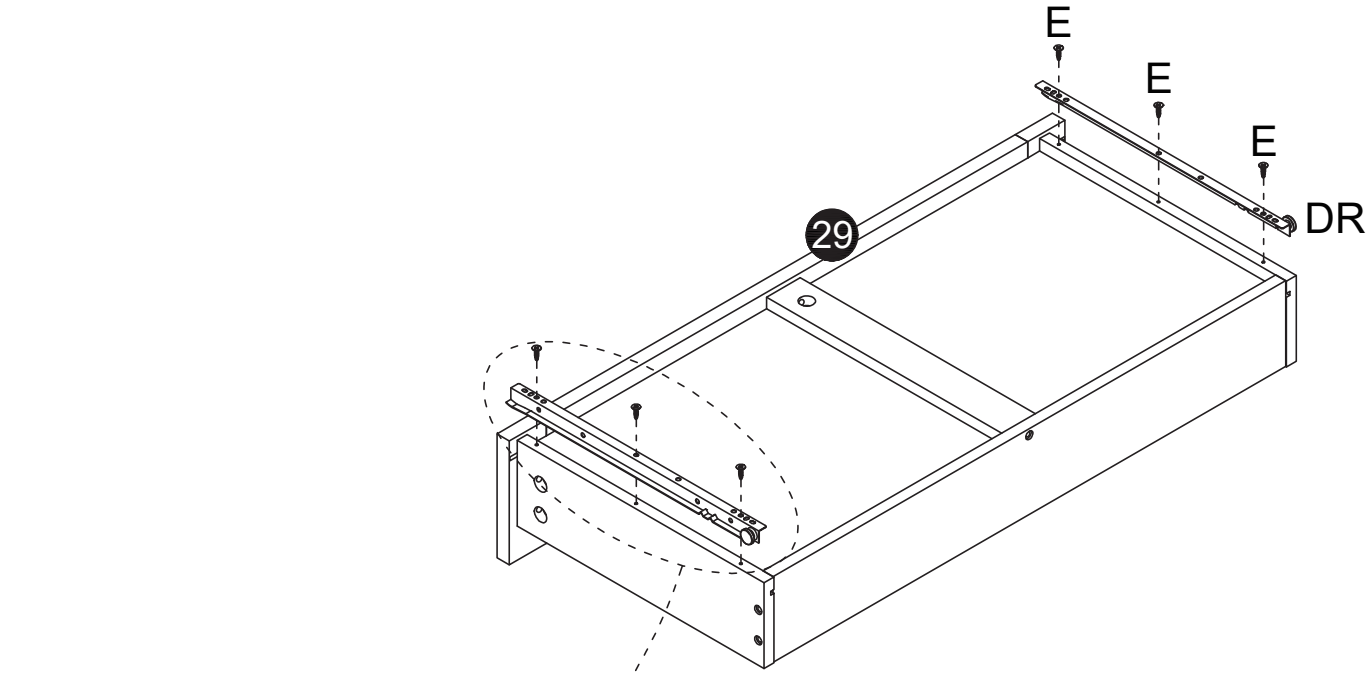
E
E
E
DR
29

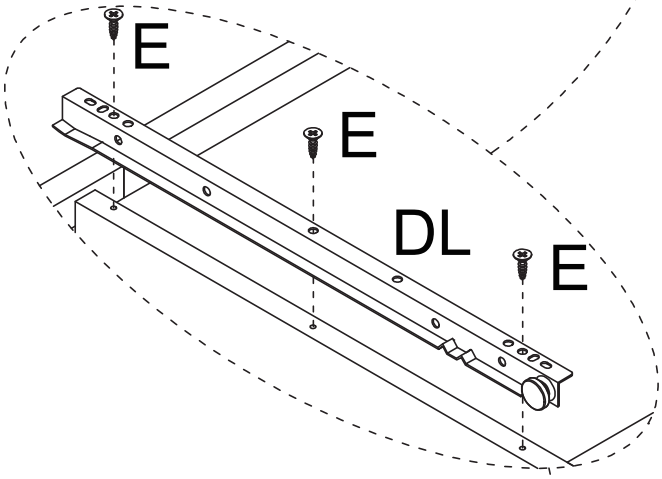
E
E
DL
E

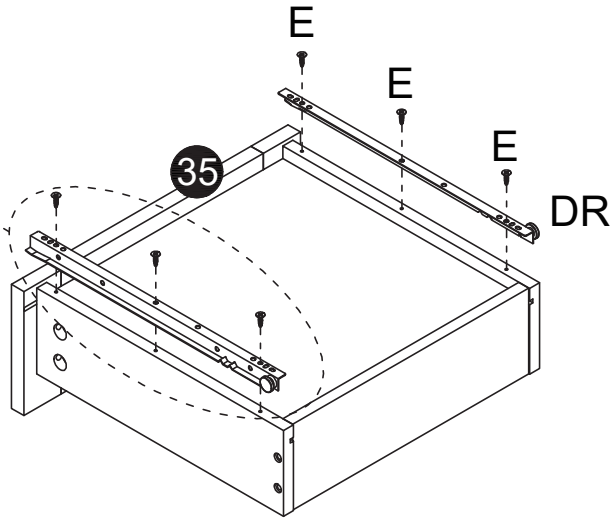
E
E
E
DR
35

04

A x4

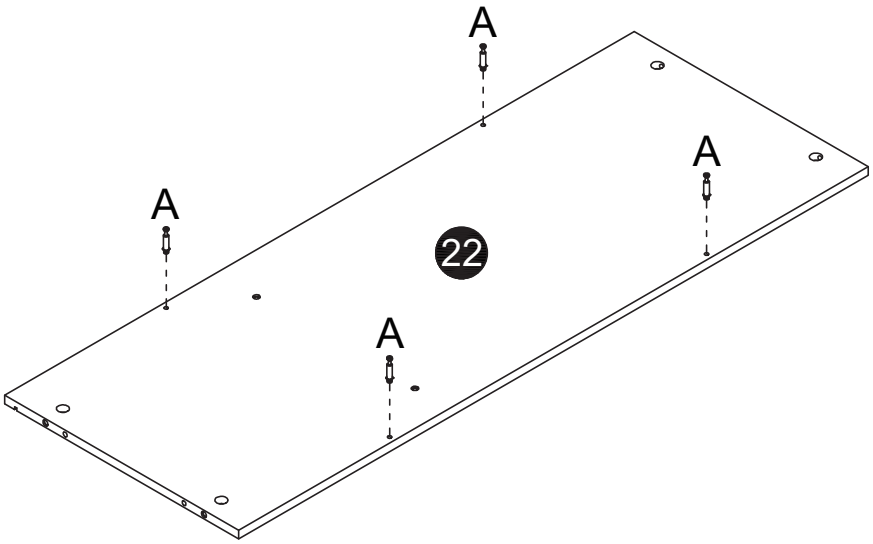

05

B x4

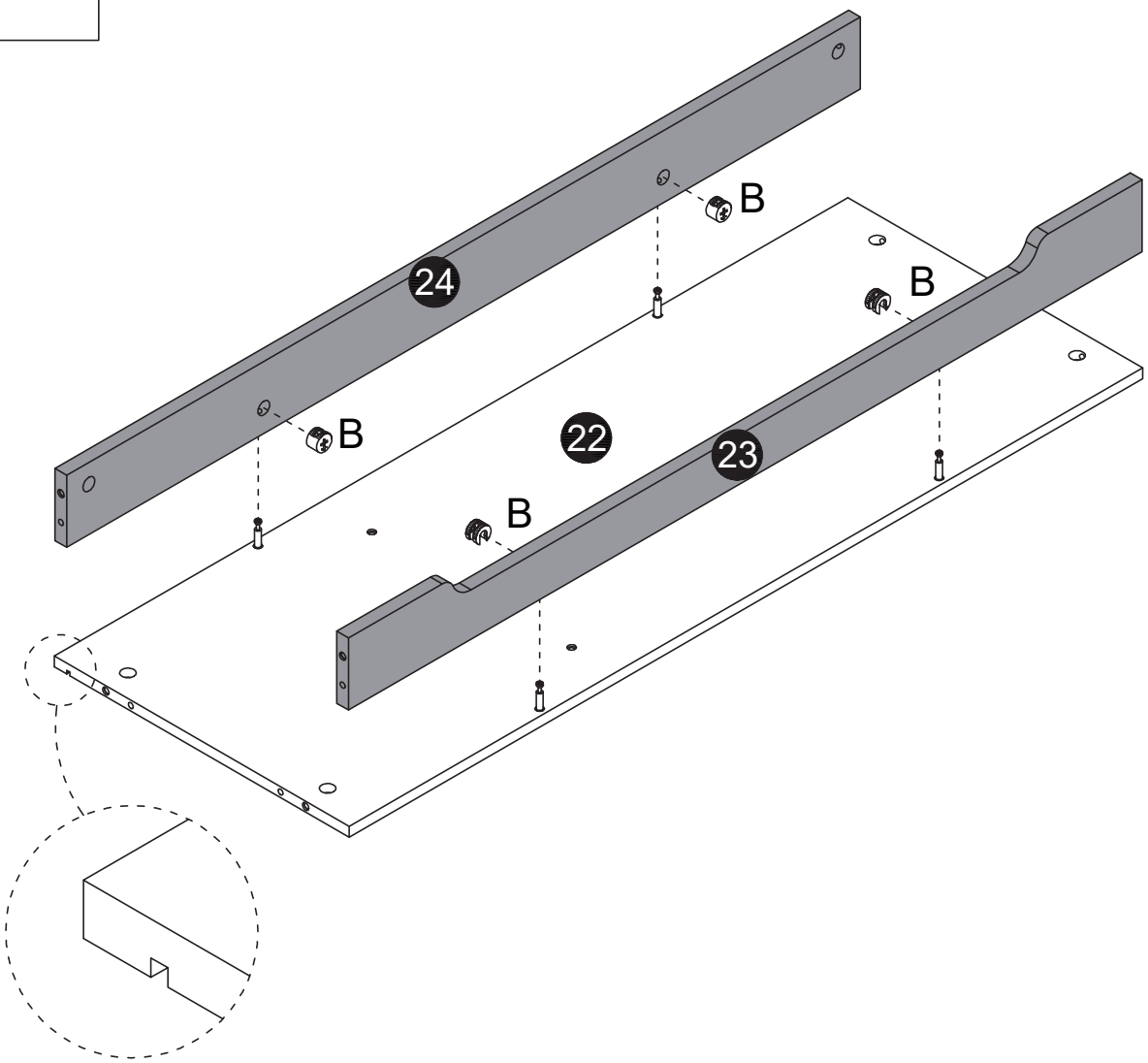

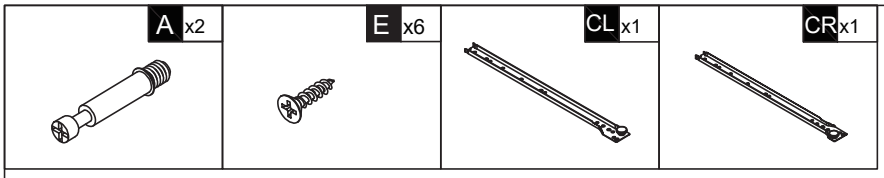
A x2
E x6
CL x1
CR x1

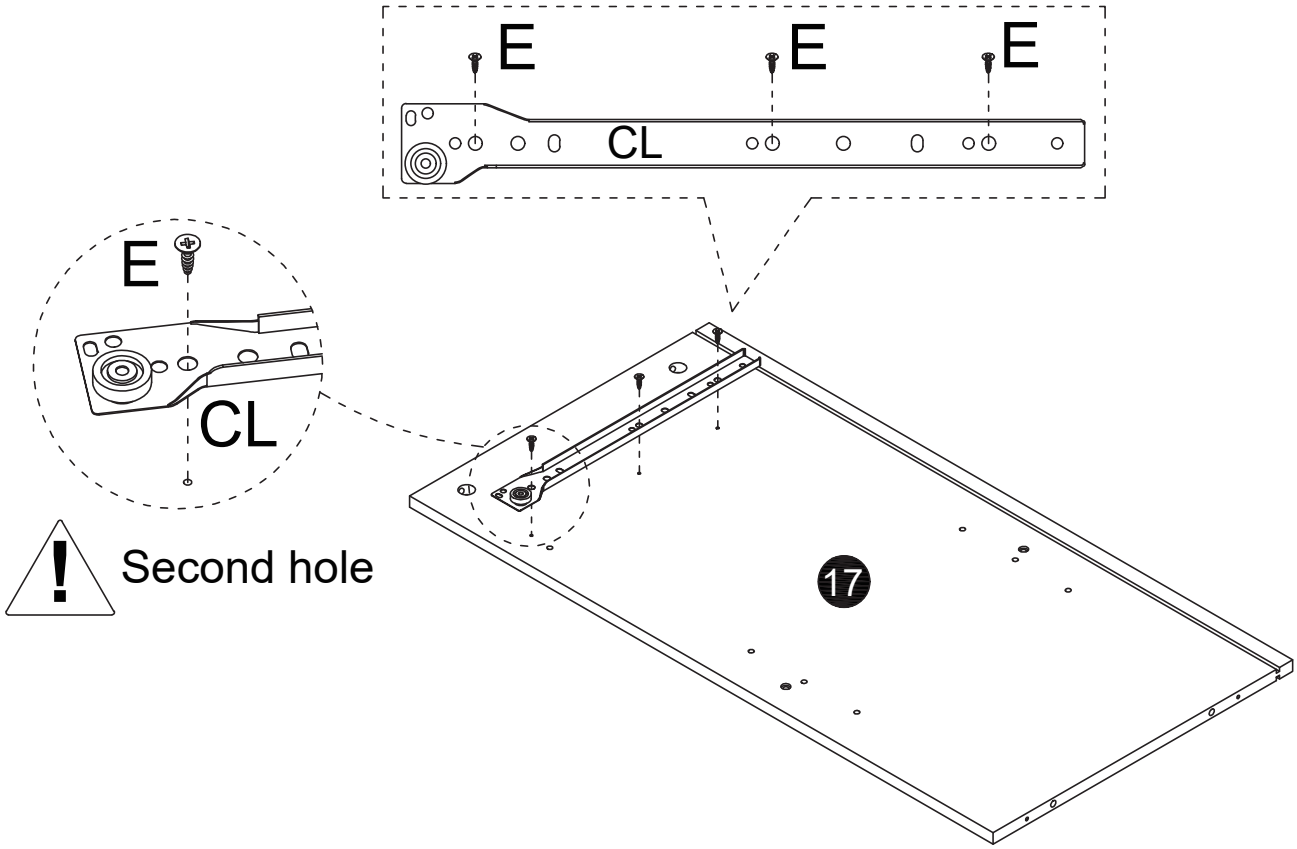
E
E
E
CL
E
CL
Second hole
17

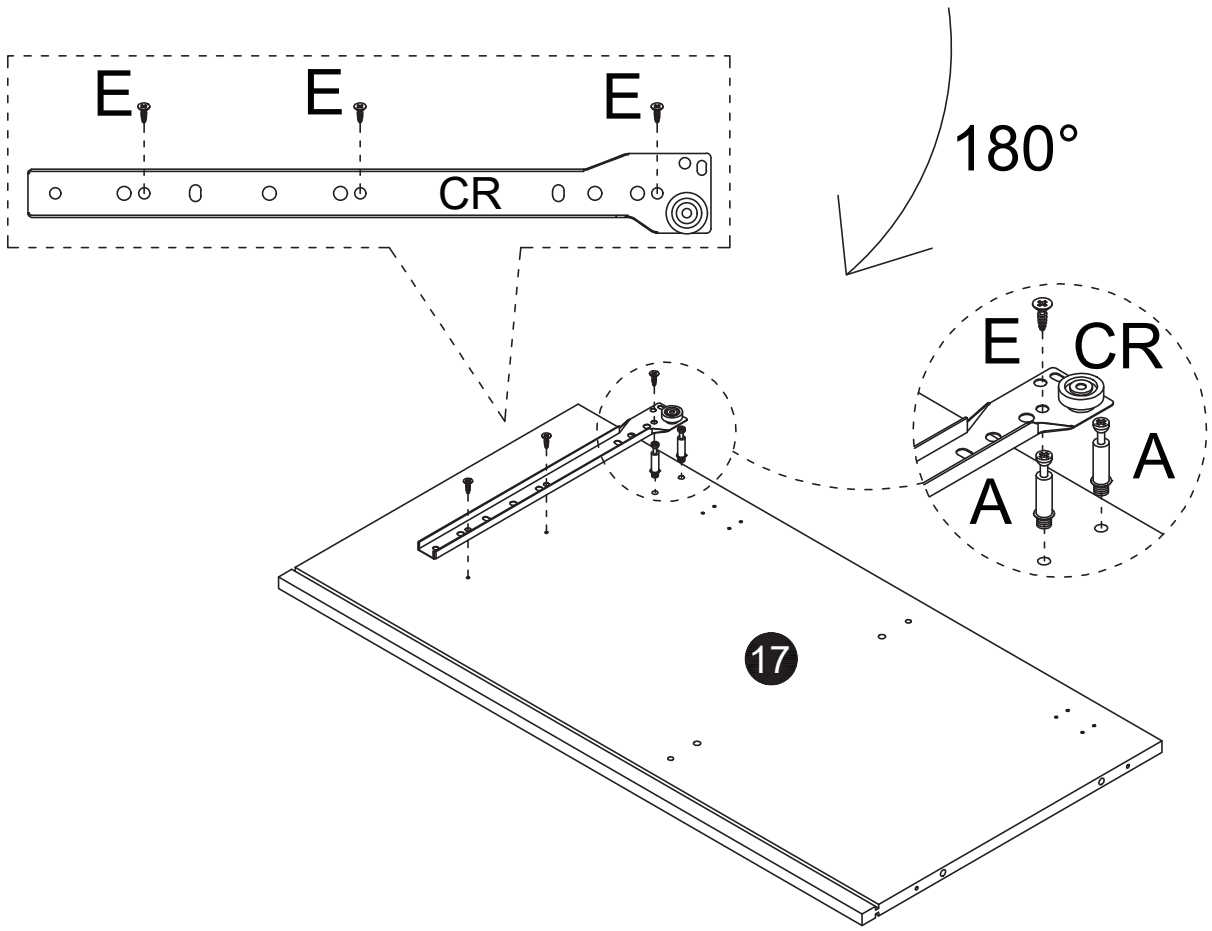
E
E
E
CR
180°
E
CR
A
A
17

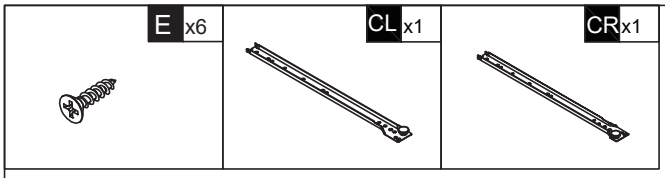
E x6
CL x1
CR x1

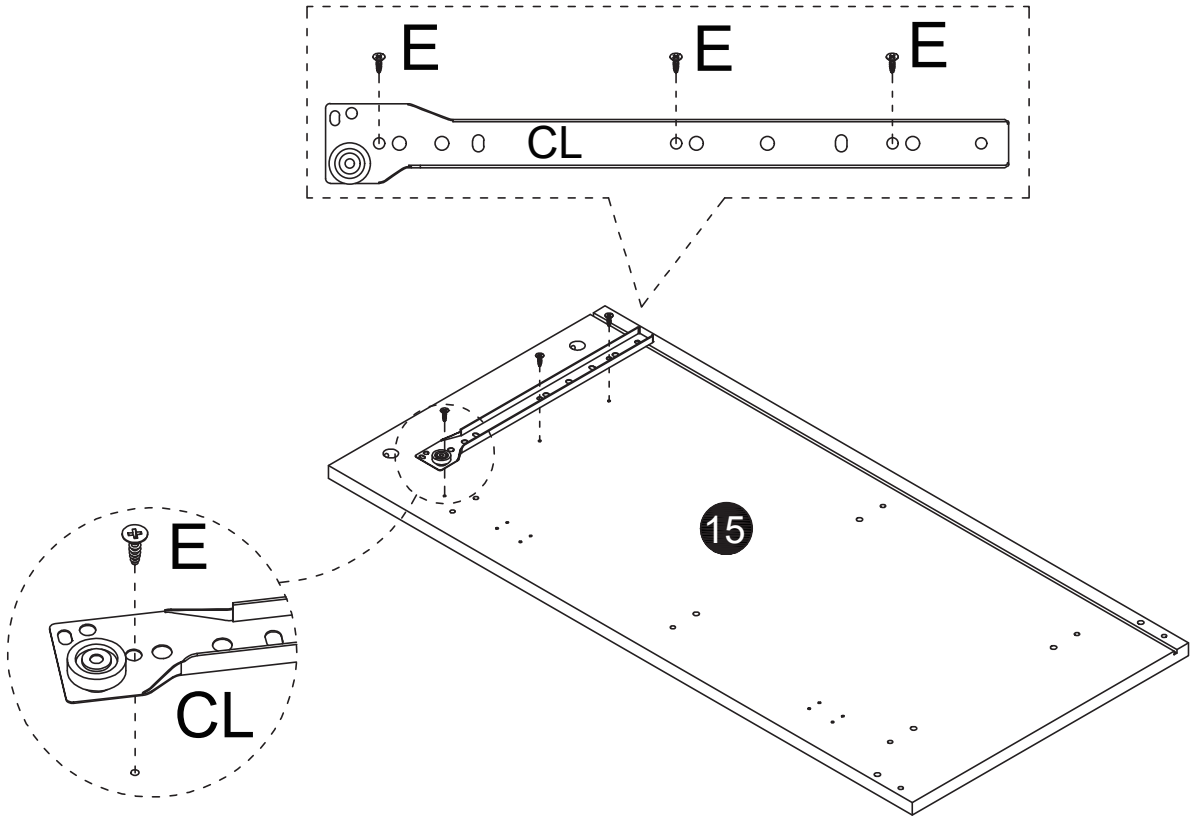
E
E
E
CL
15
E
CL

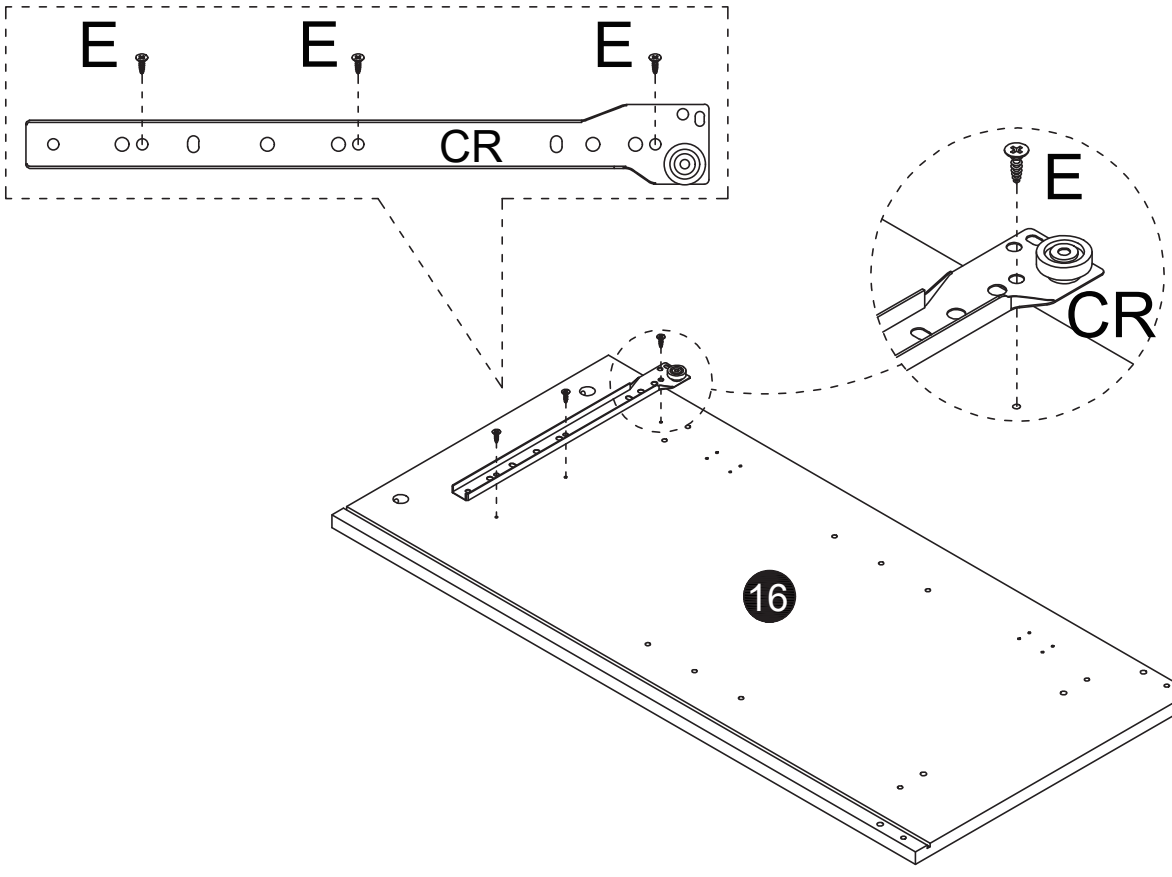
E
E
E
CR
E
CR
16

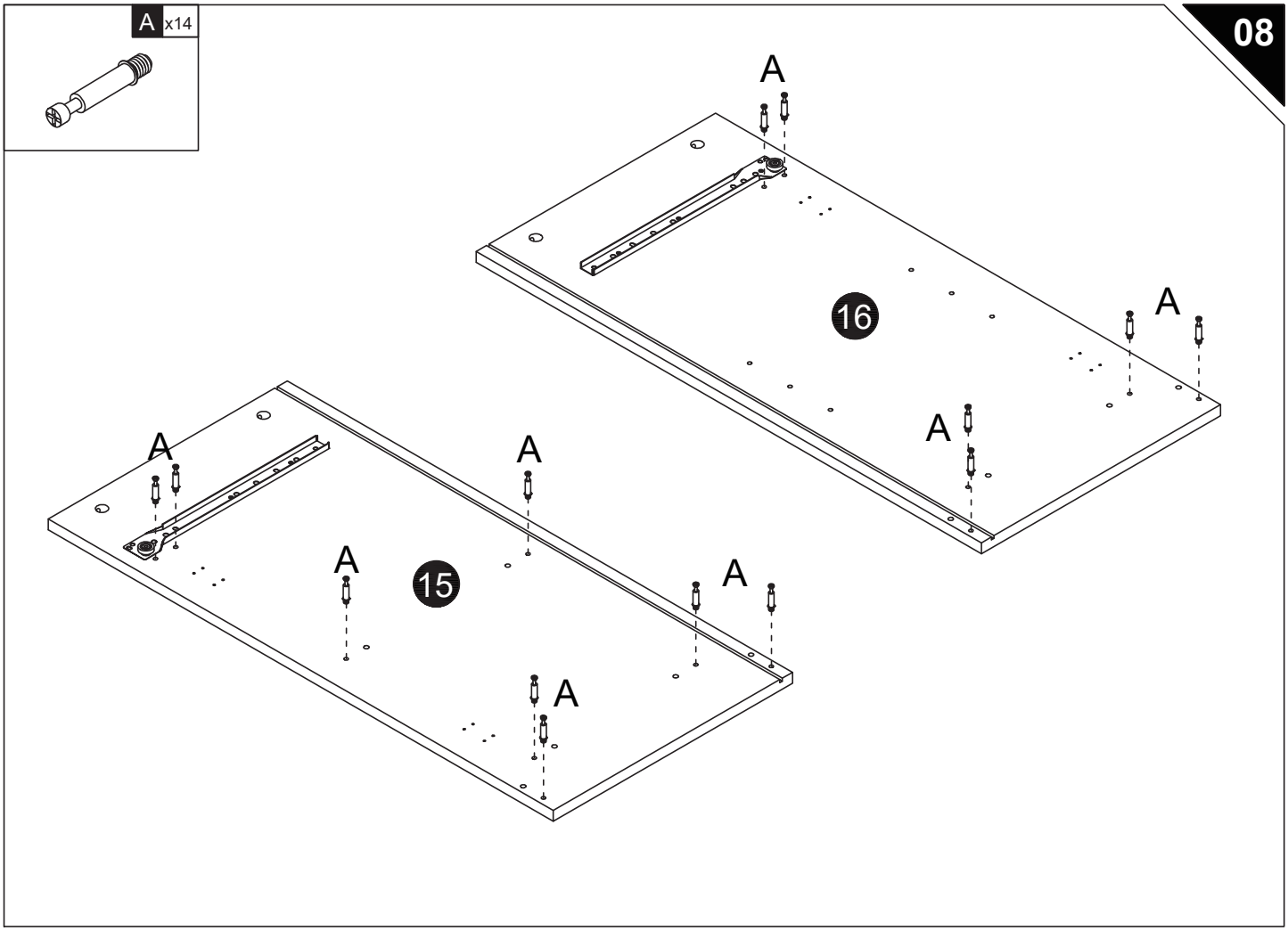
A x14
A
16
A
A
A
A
15
A
A
A

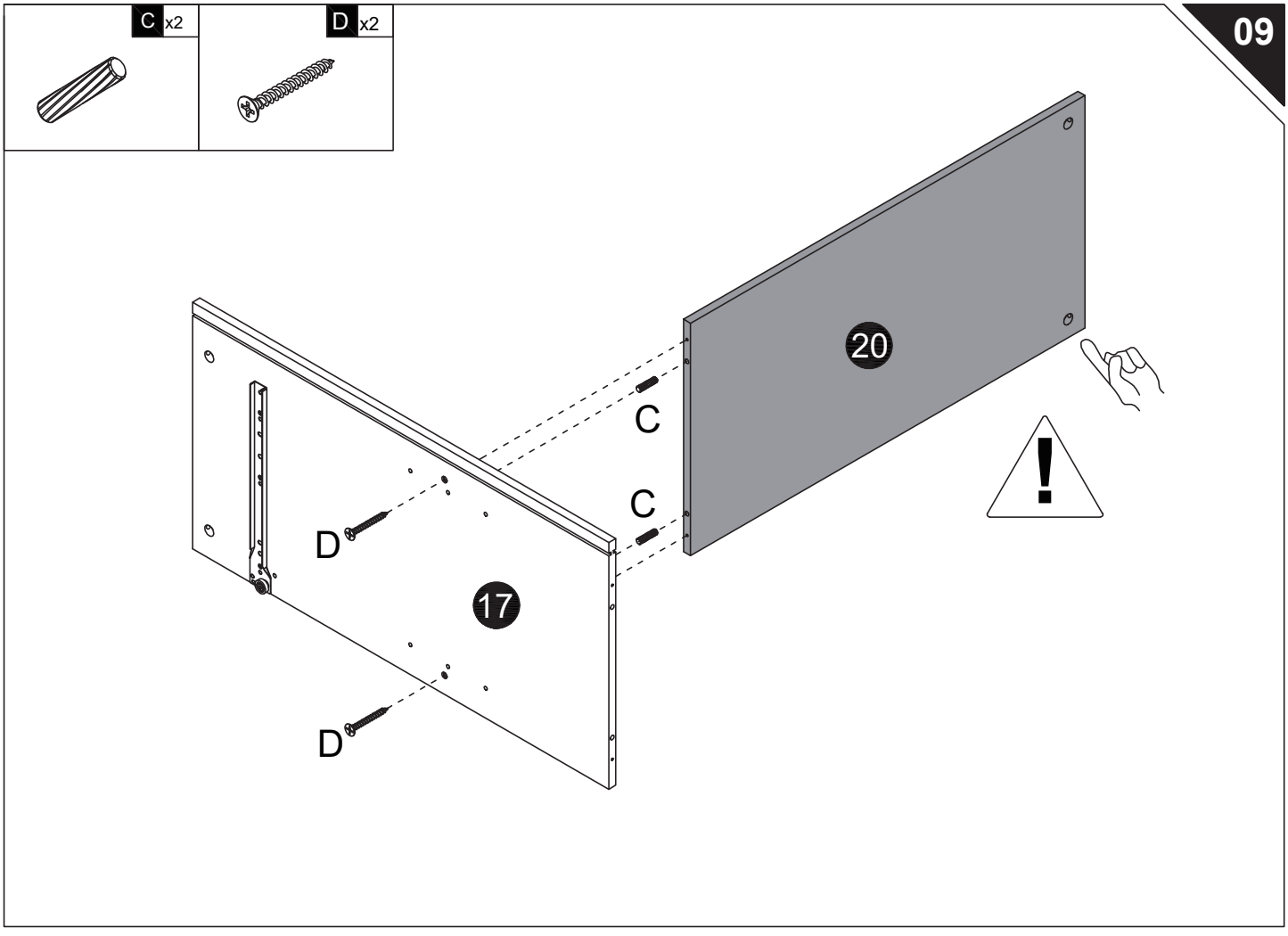
C x2
D x2
20
C
C
D
17
D

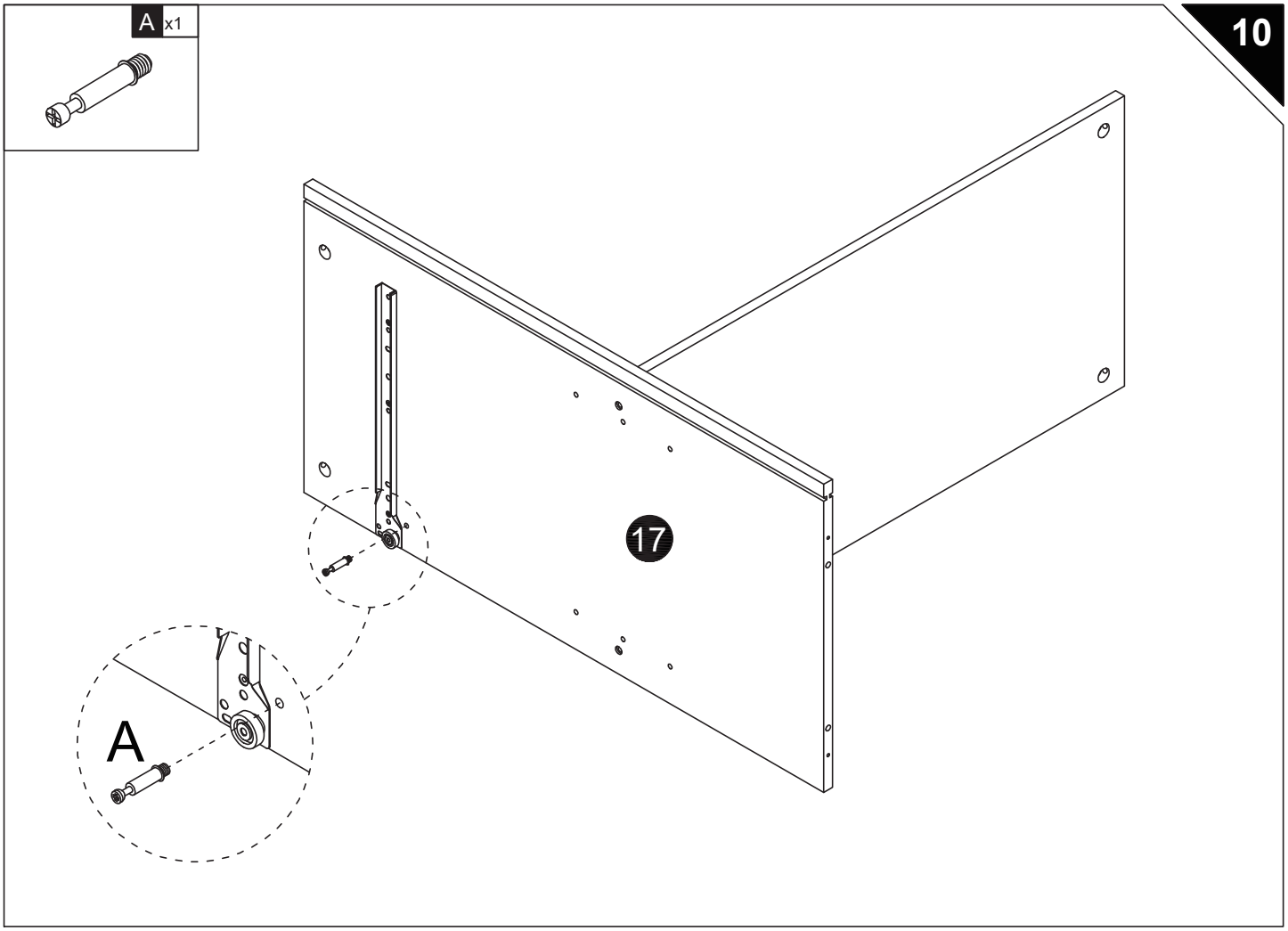
A x1
17
A

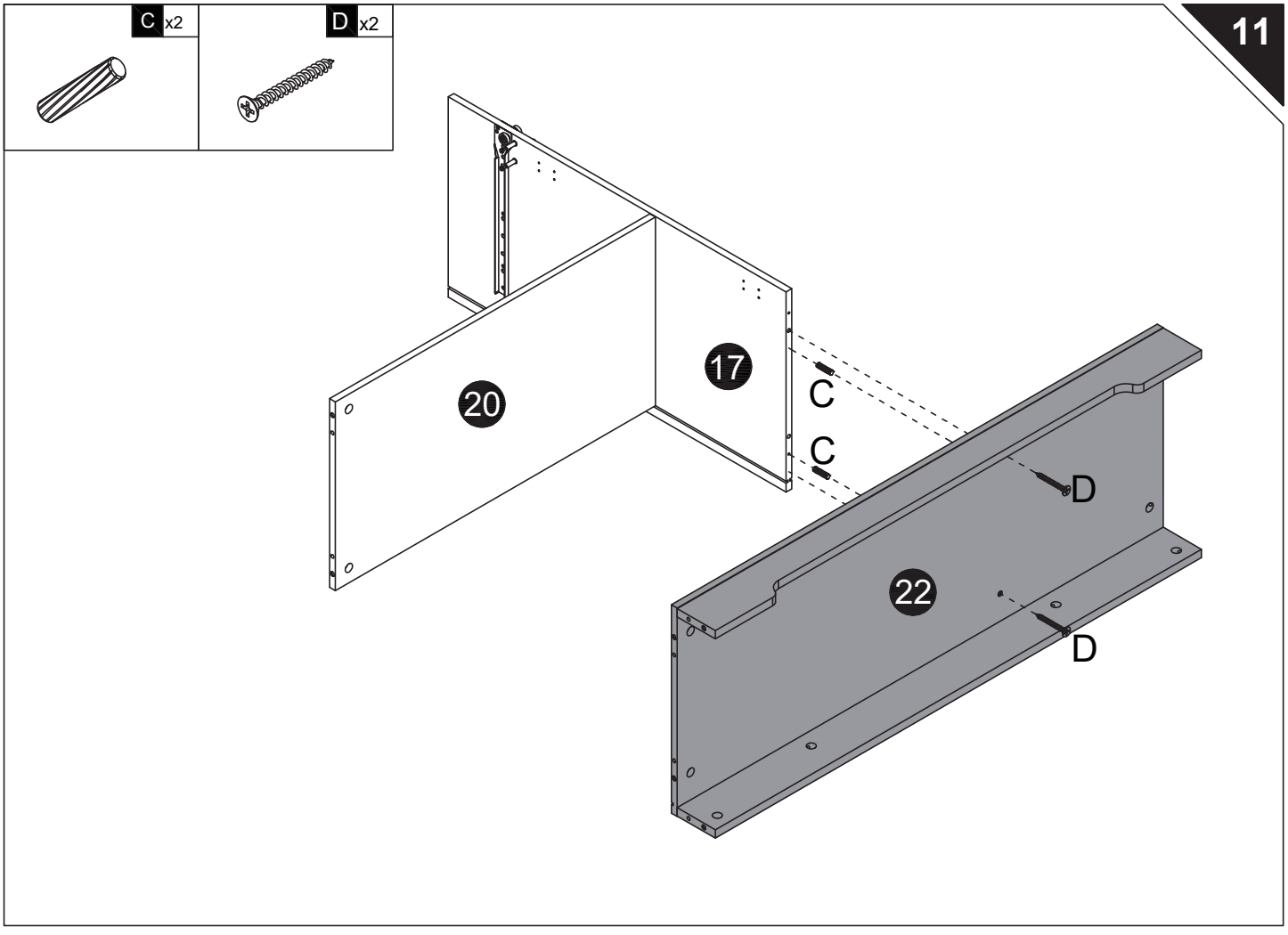
C x2
D x2
17
20
C
C
D
22
D

12

B x3

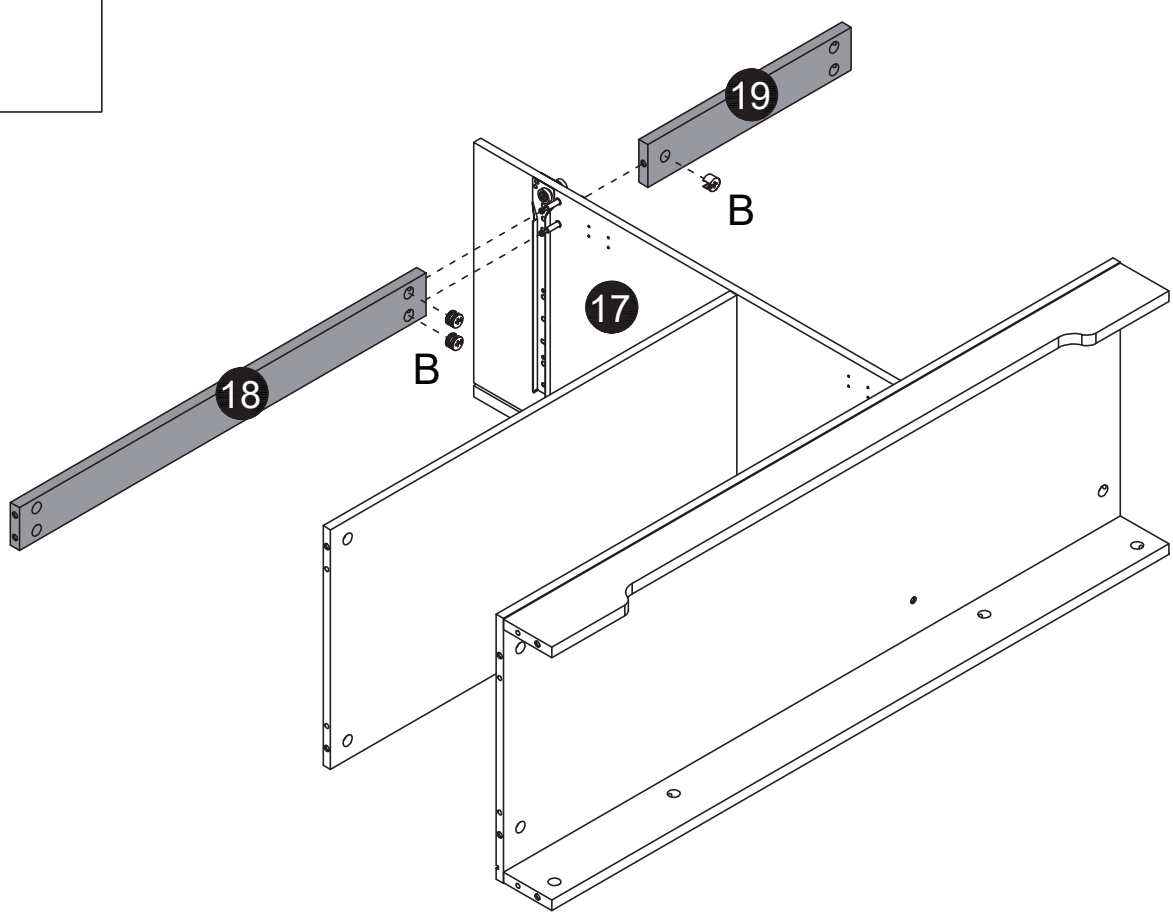

13

B x8

C x6

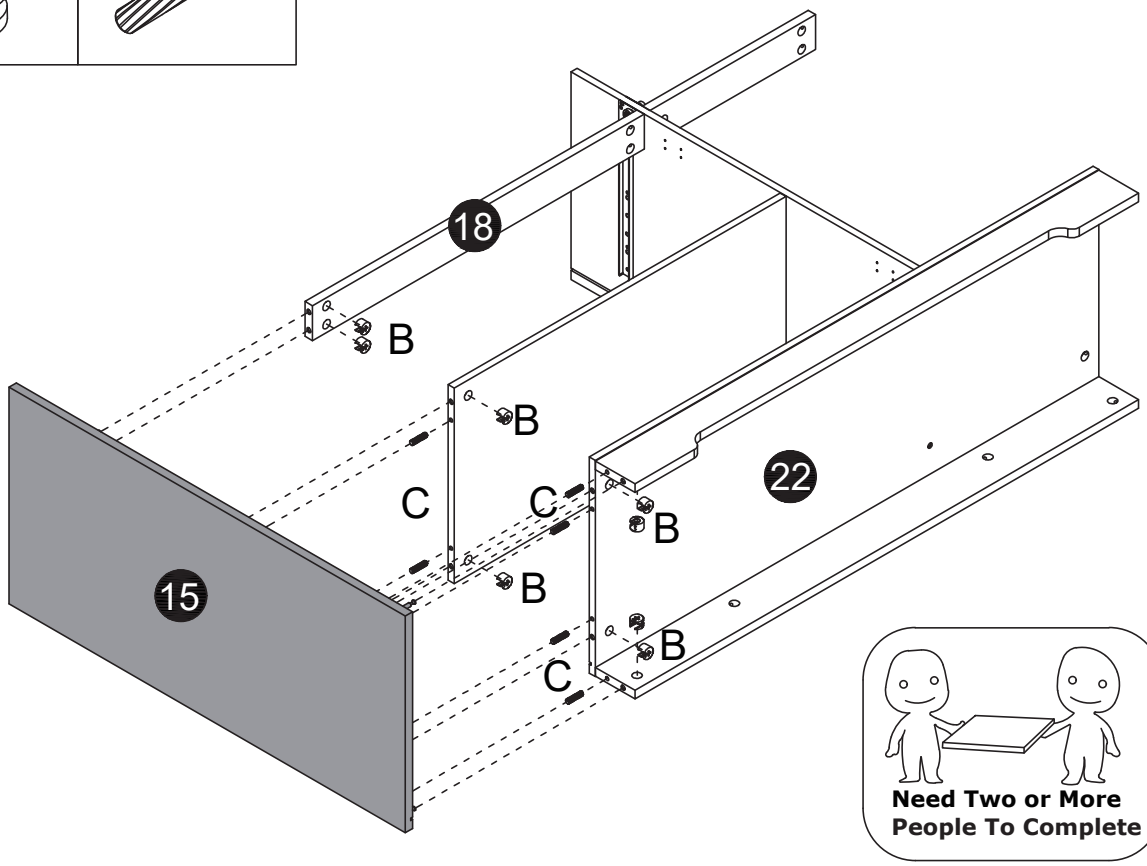

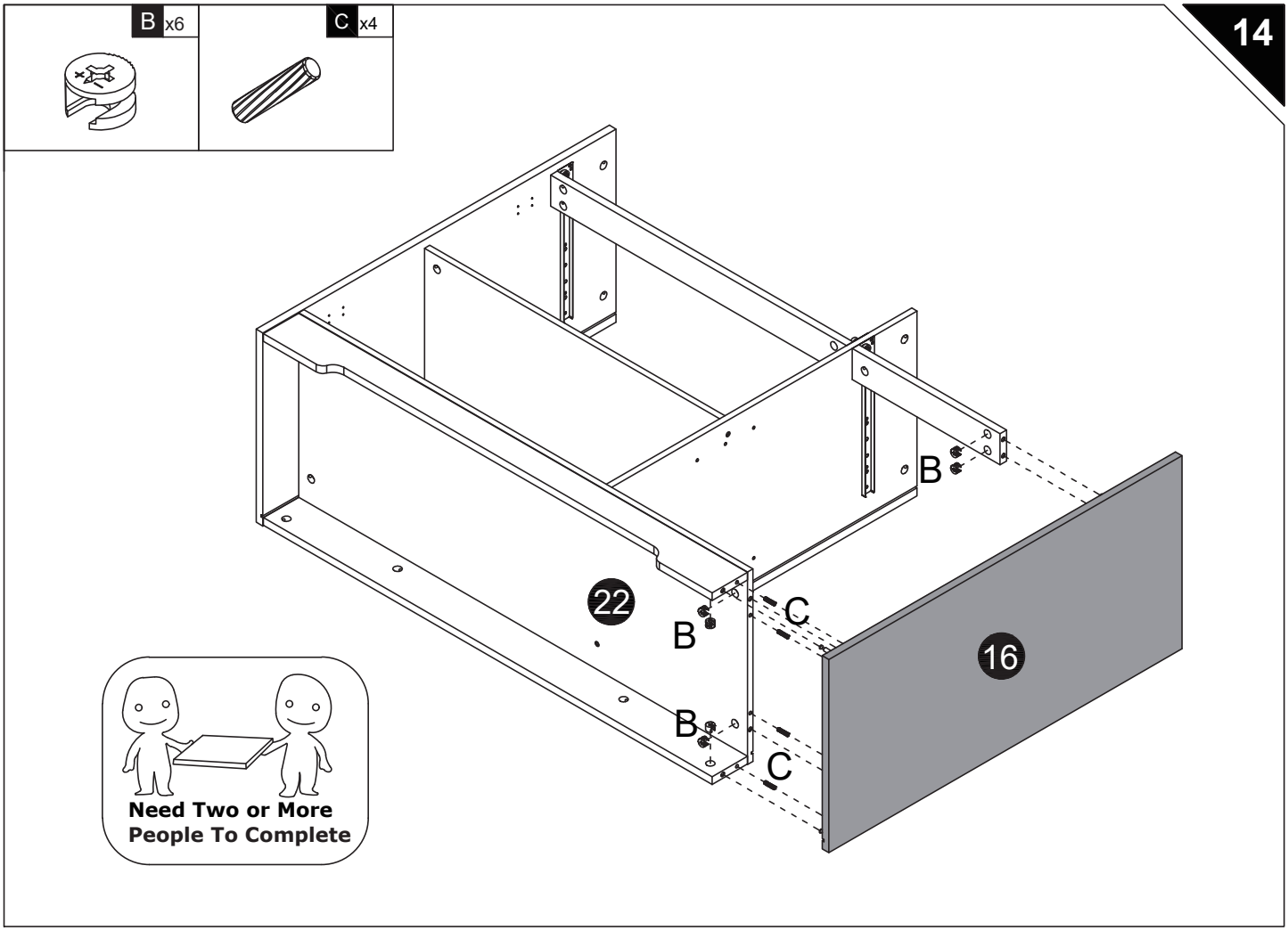
B x6
C x4
14
22
B
C
16
Need Two or More
People To Complete

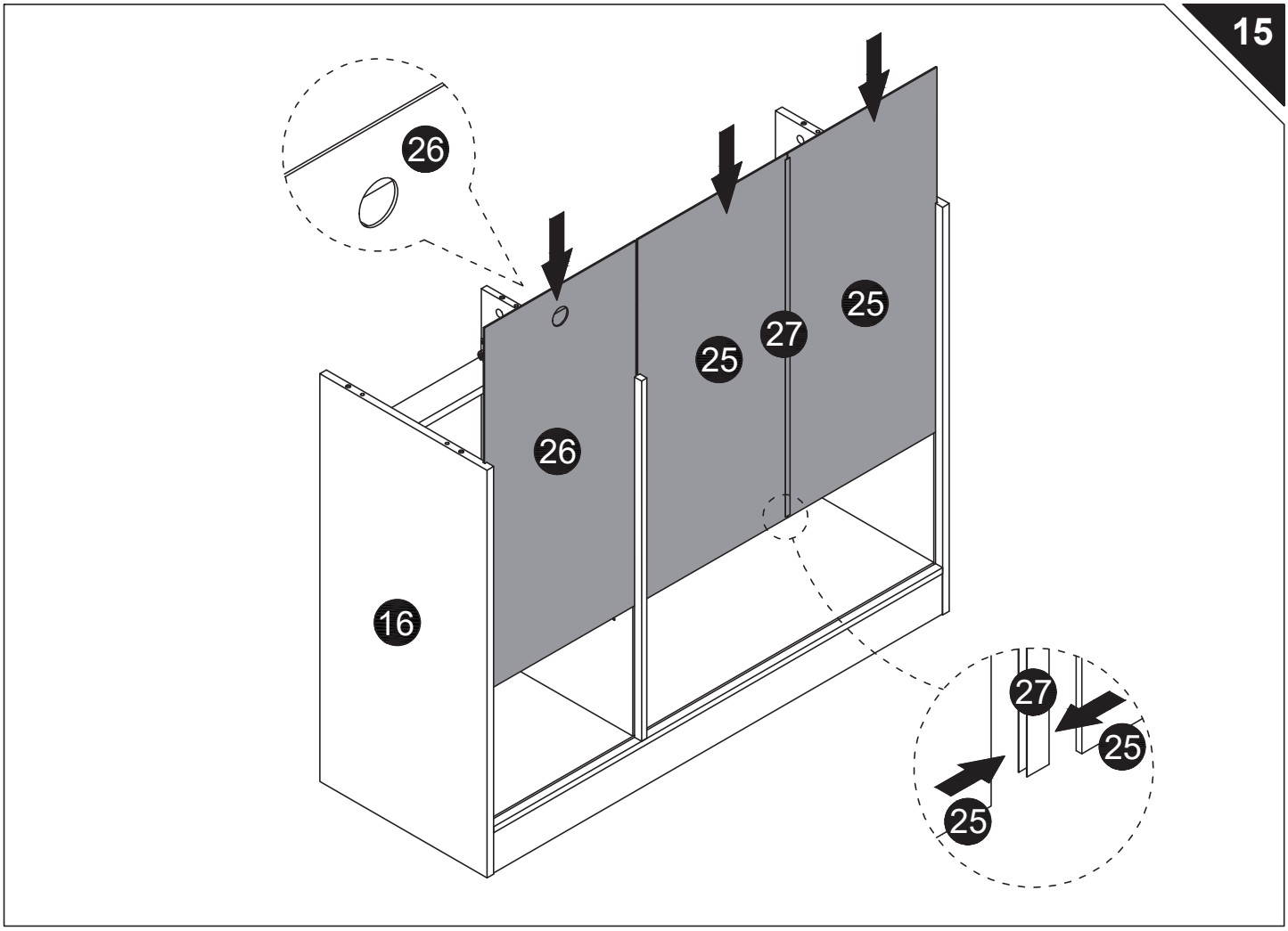
15
26
25
27
25
26
16
27
25
25

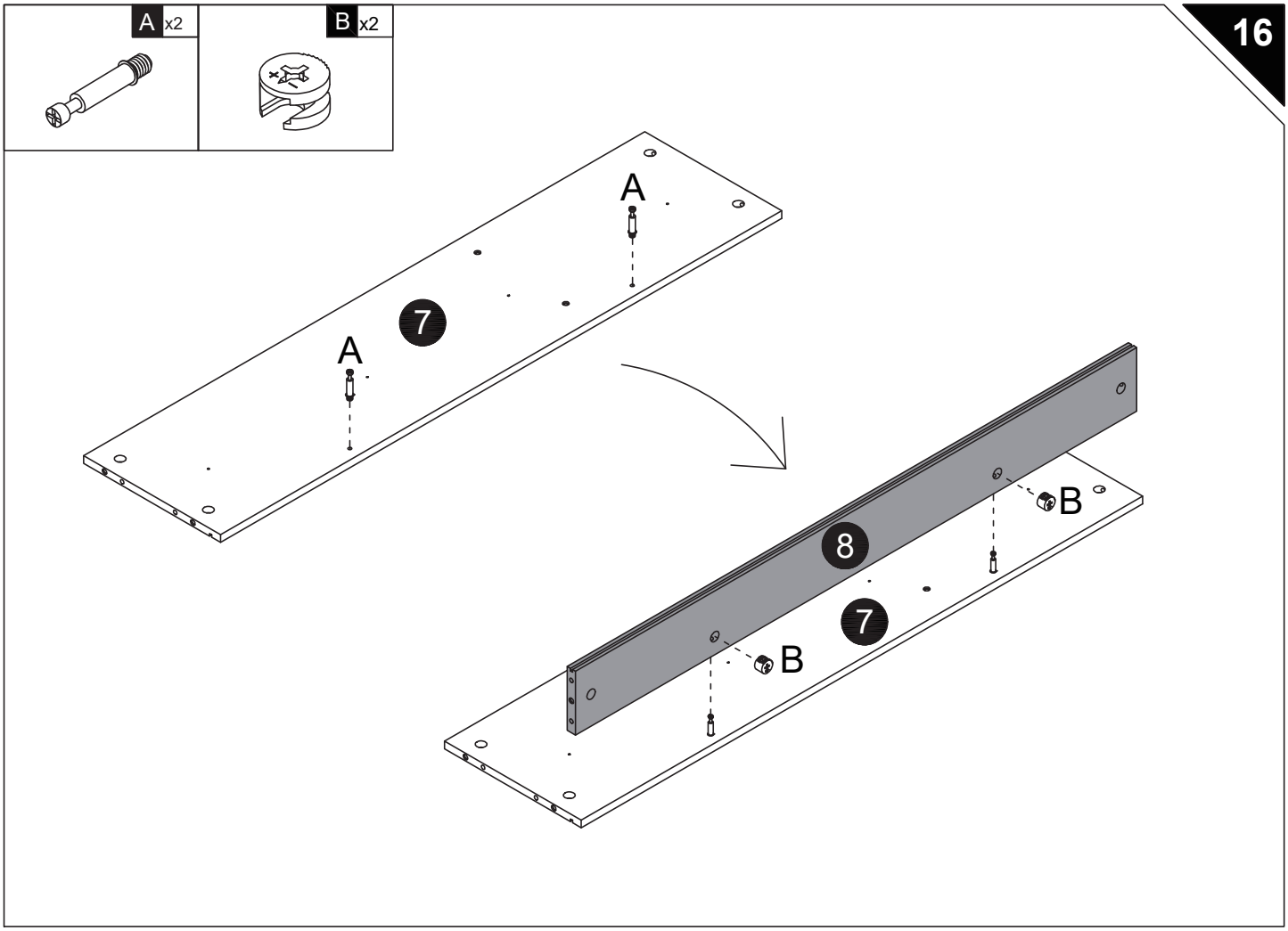
A x2
B x2
A
A
7
8
7
B
B

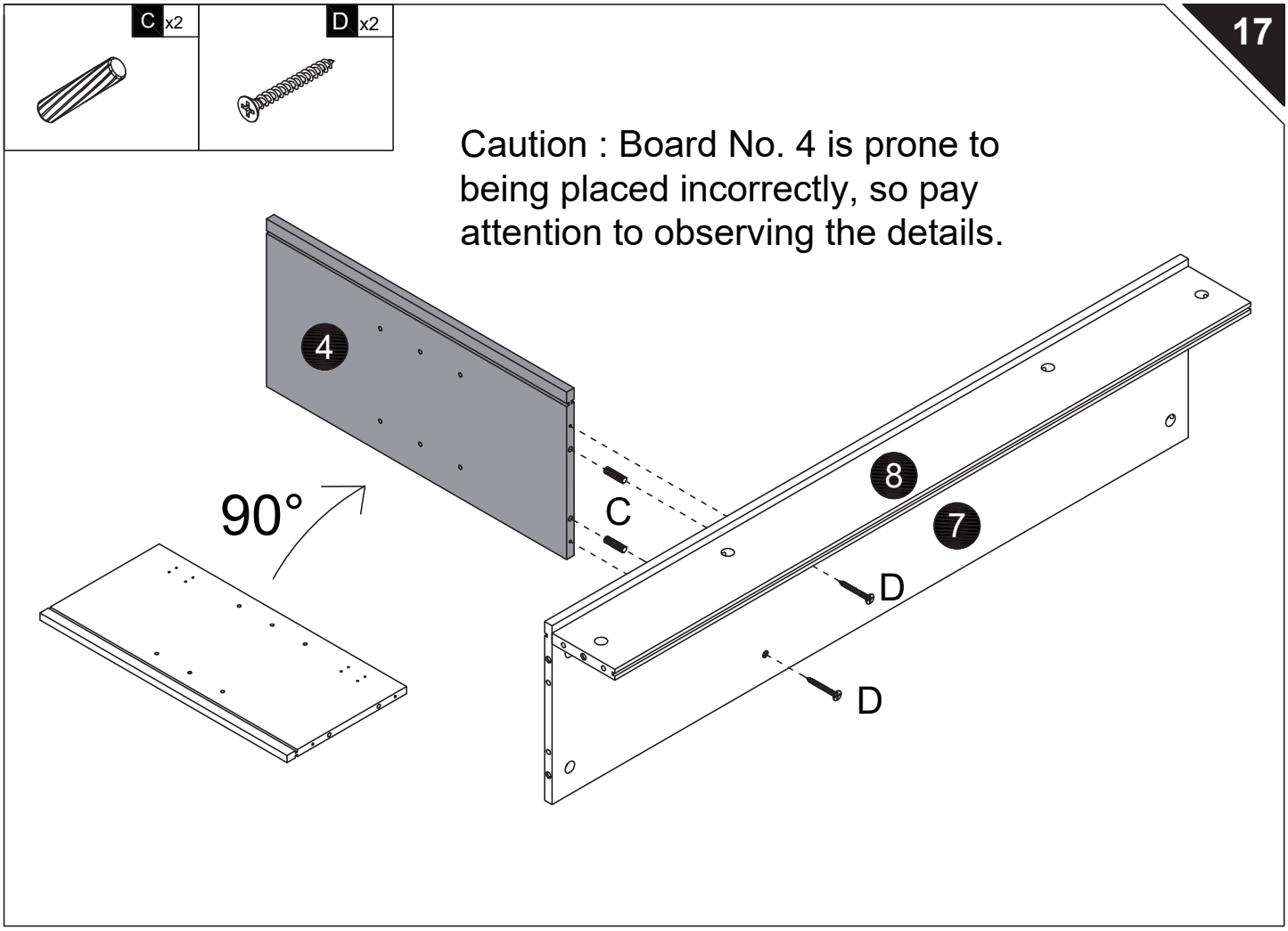
C x2
D x2
Caution : Board No. 4 is prone to being placed incorrectly, so pay attention to observing the details.
4
90°
C
8
7
D
D

A x6

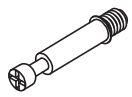

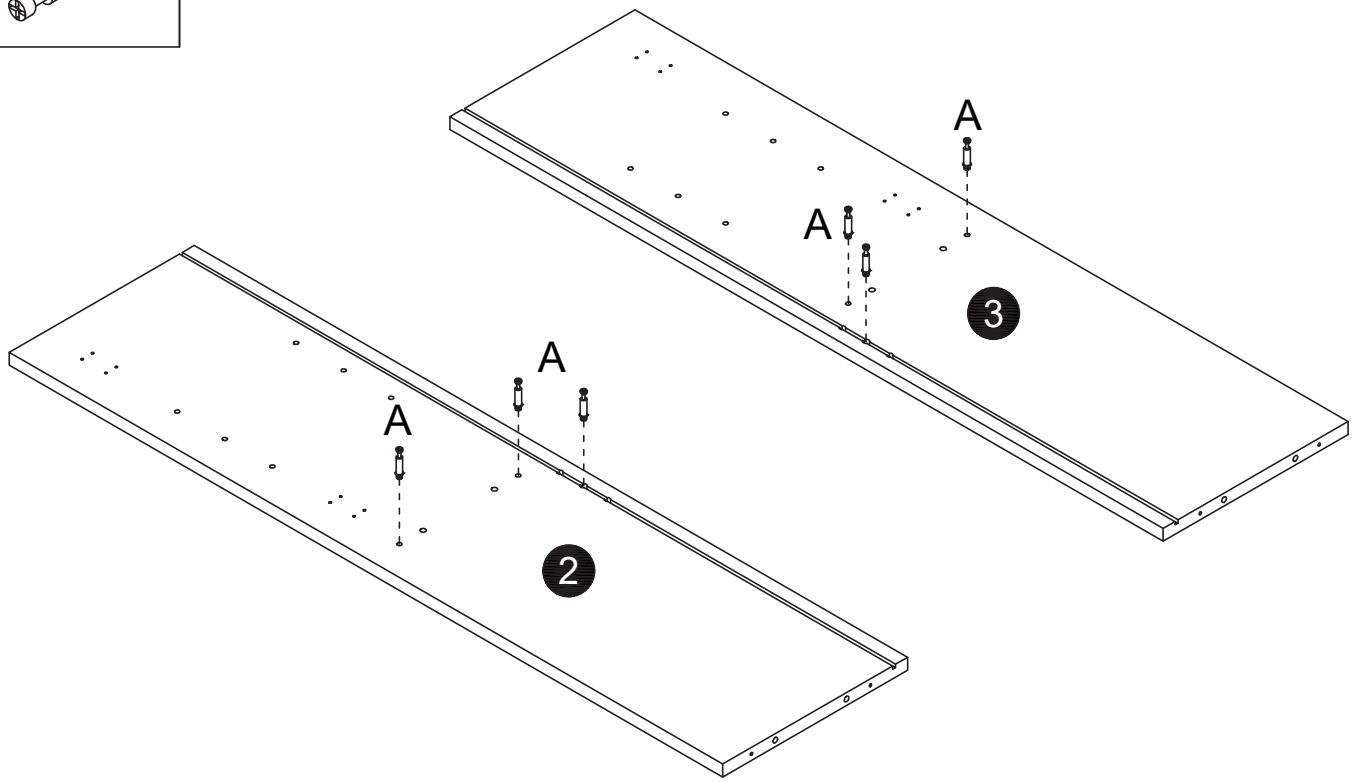

B x3



C x4



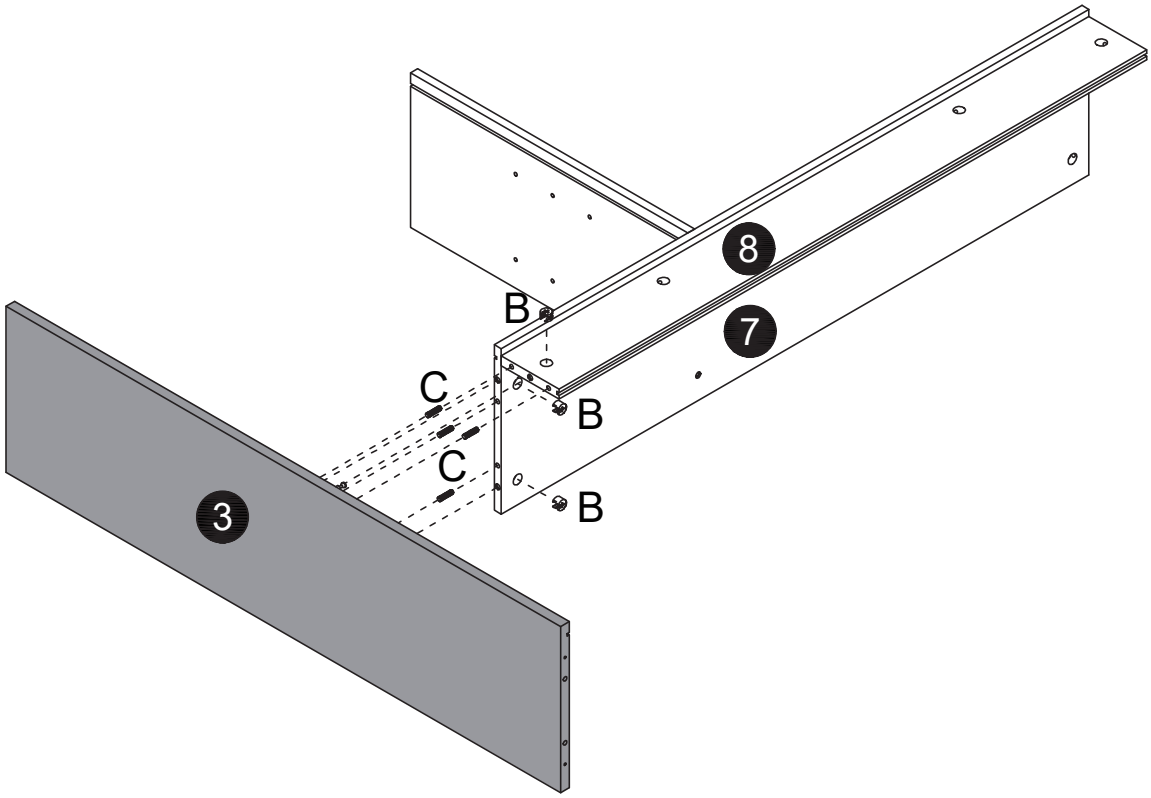

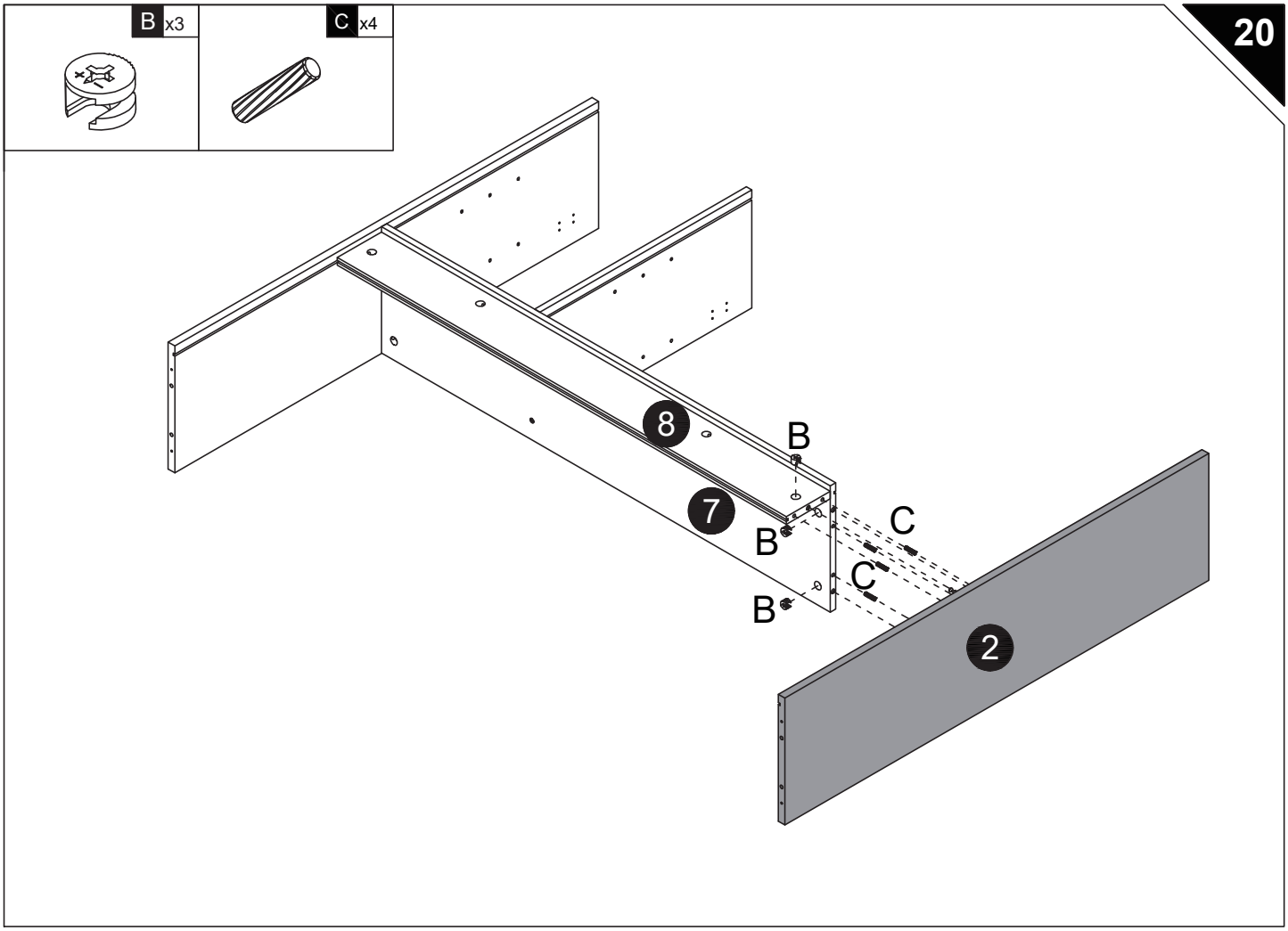
B x3
C x4
8
7
B
B
B
C
C
2

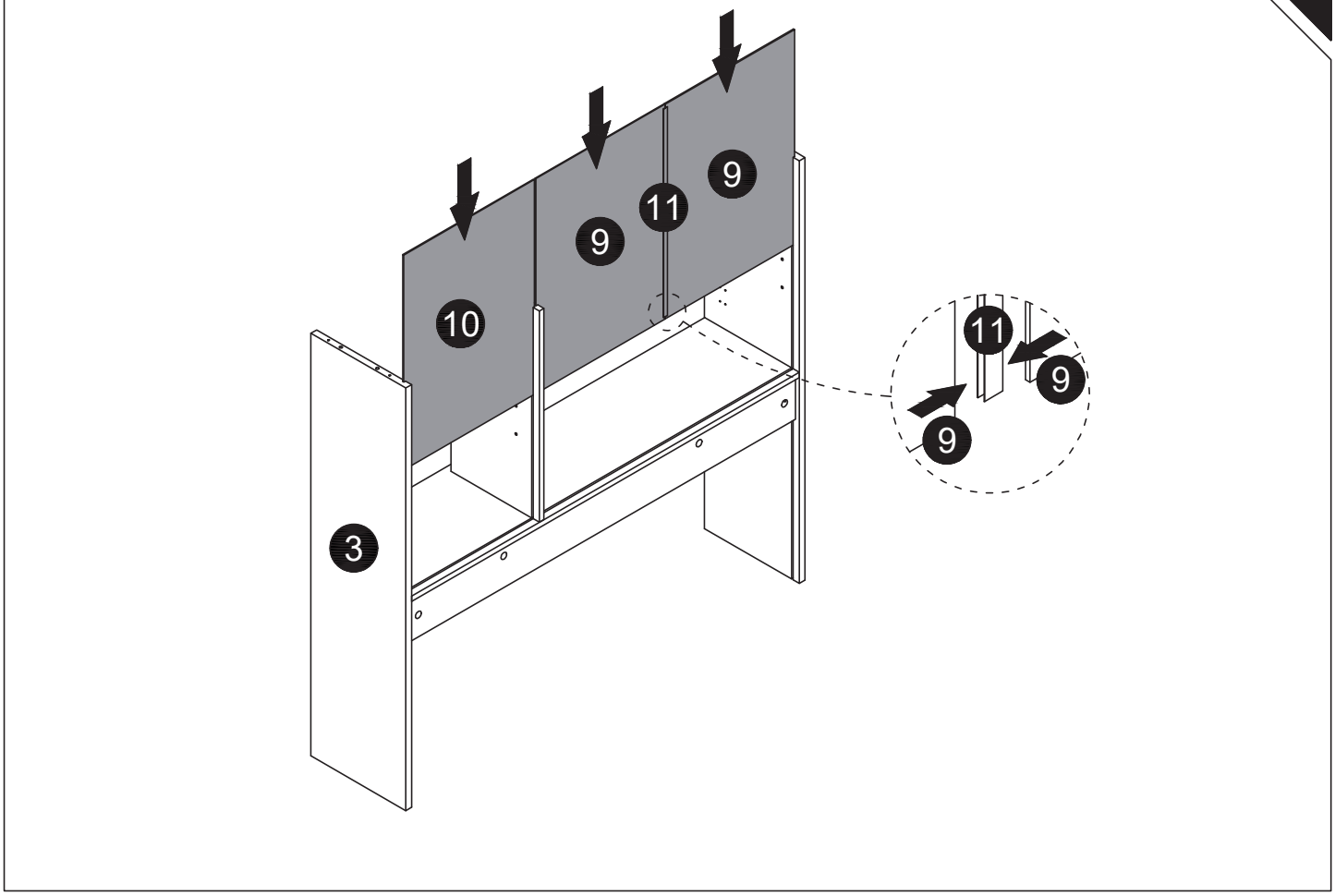
9
11
9
10
3
11
9
9

I x1



I-1 I-2

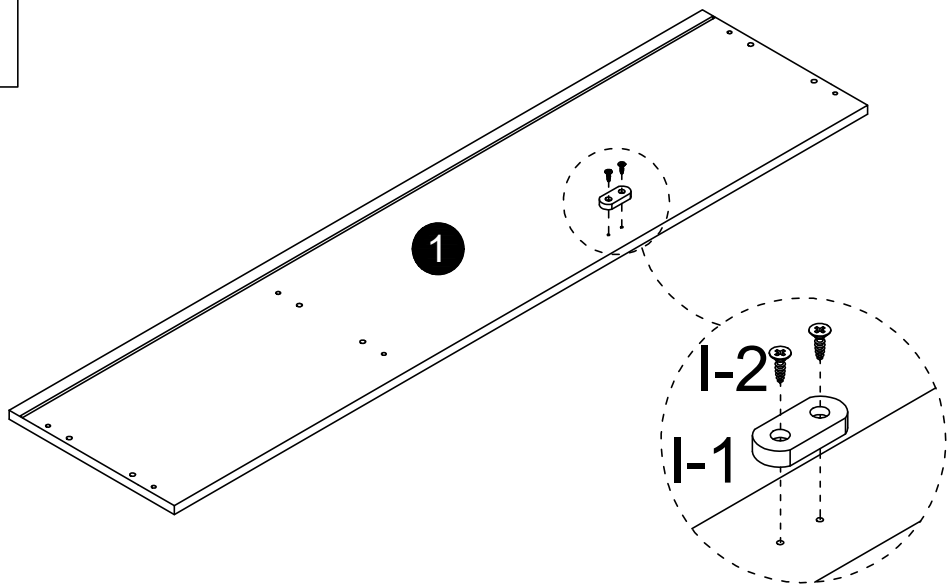

C x6

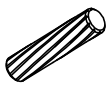

D x6



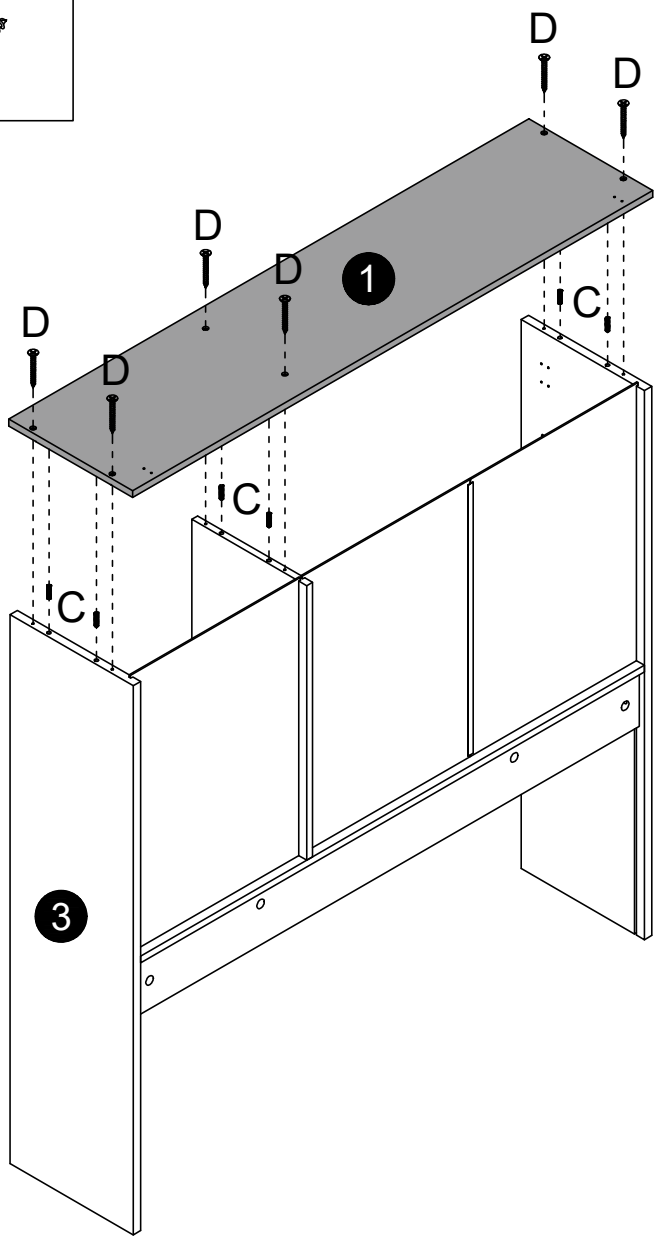

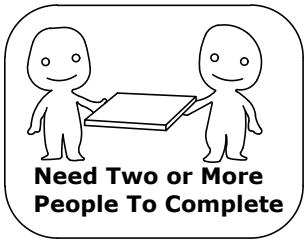

H x1



N x4



Q x1



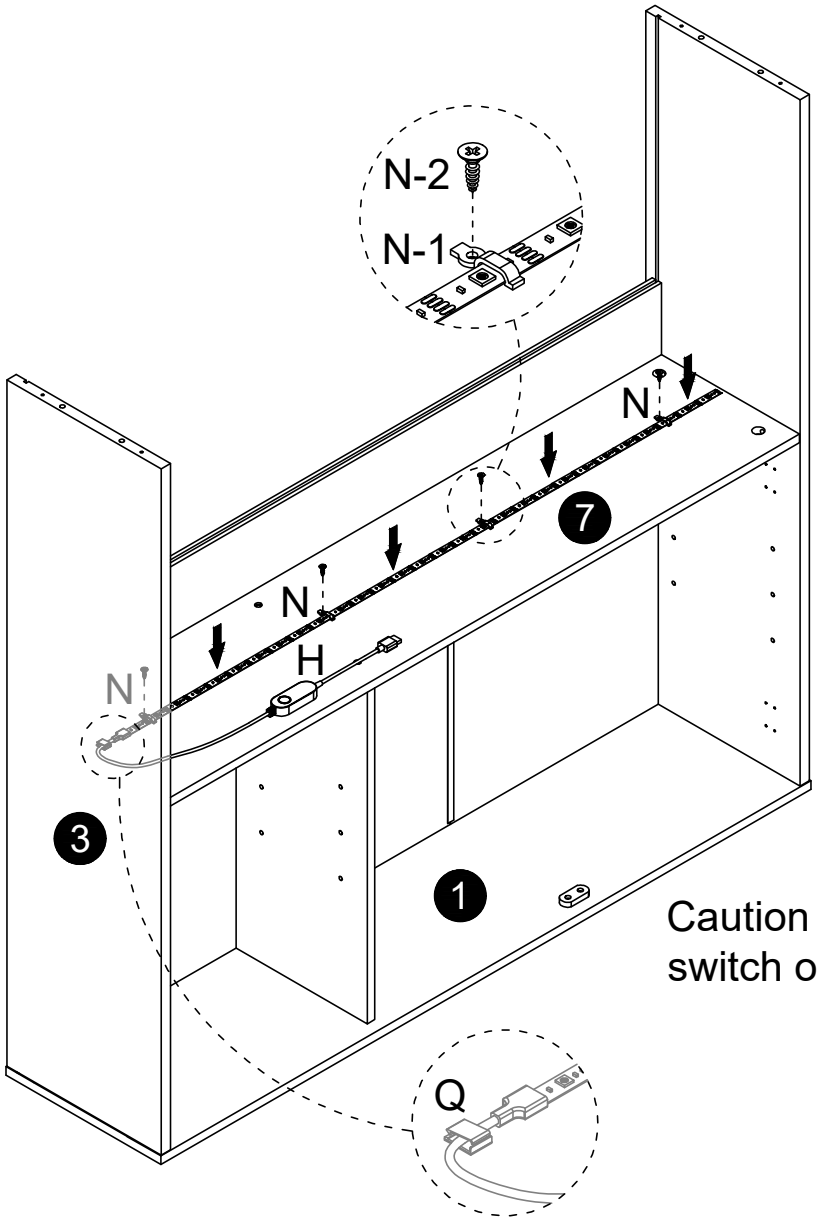

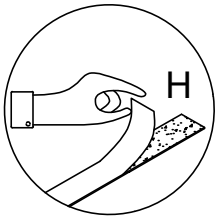

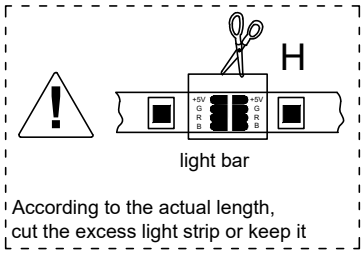



Caution : Place the strip light #H switch on the side near panel No.3.

A x6

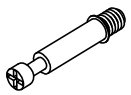

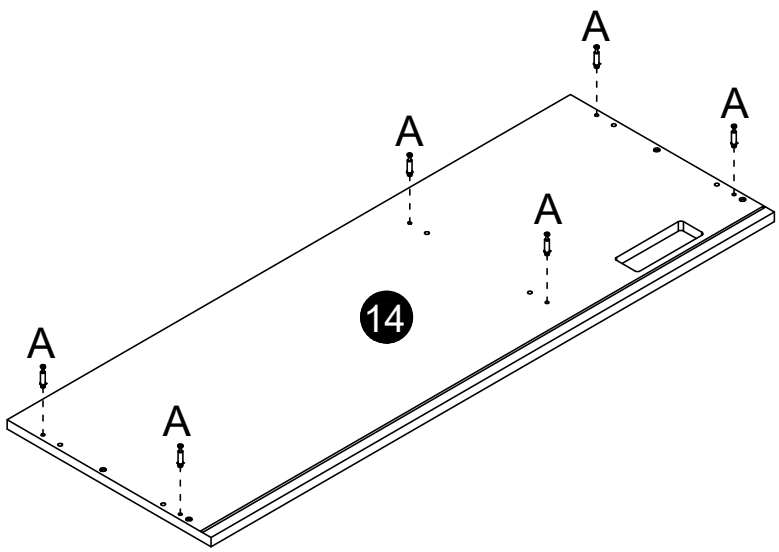

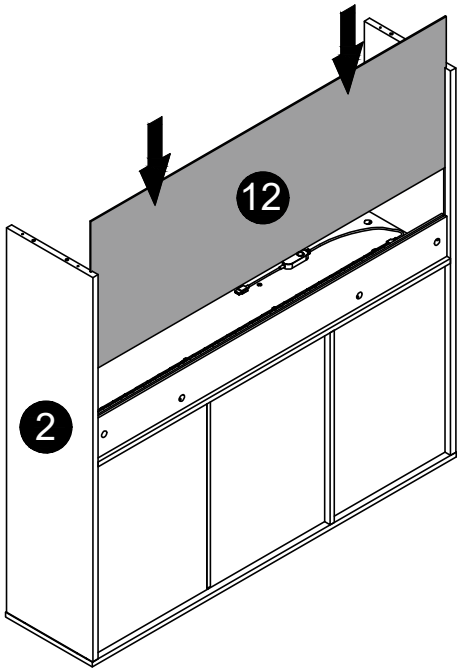
12
2

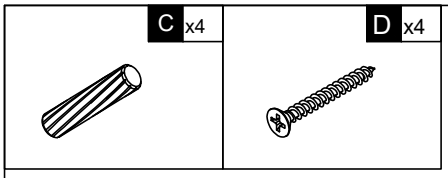
C x4
D x4

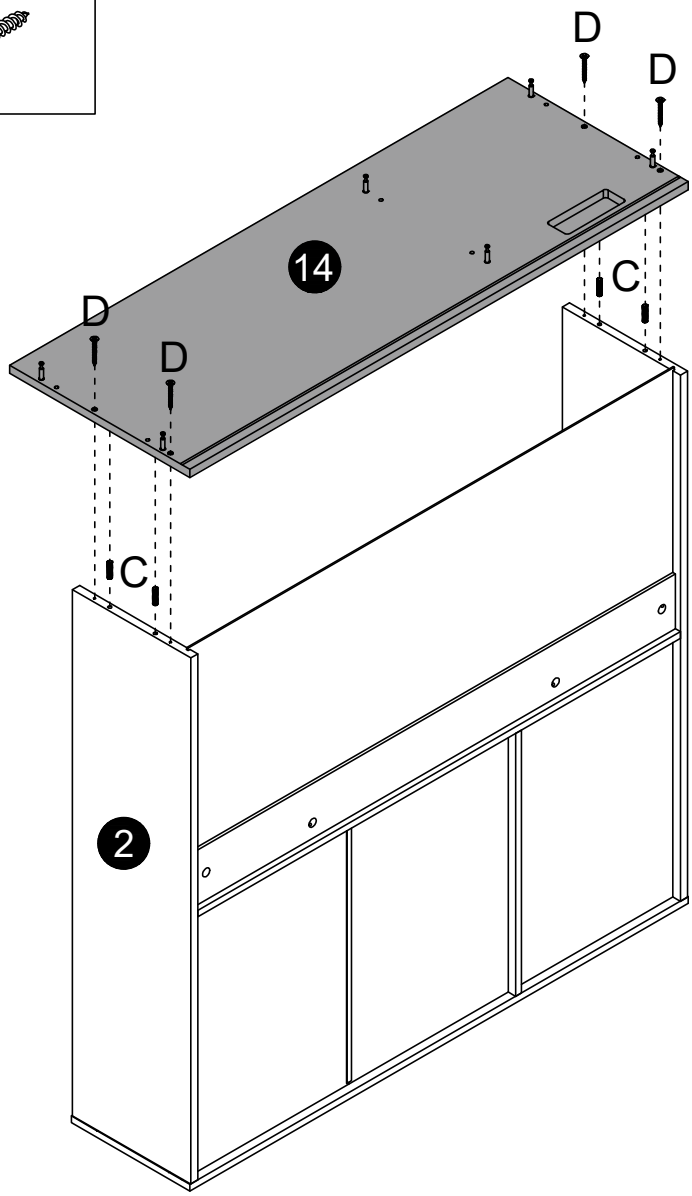
D
D
14
C
D
D
C
2

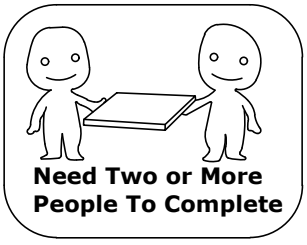
Need Two or More
People To Complete

28

P x2



P-1 P-2

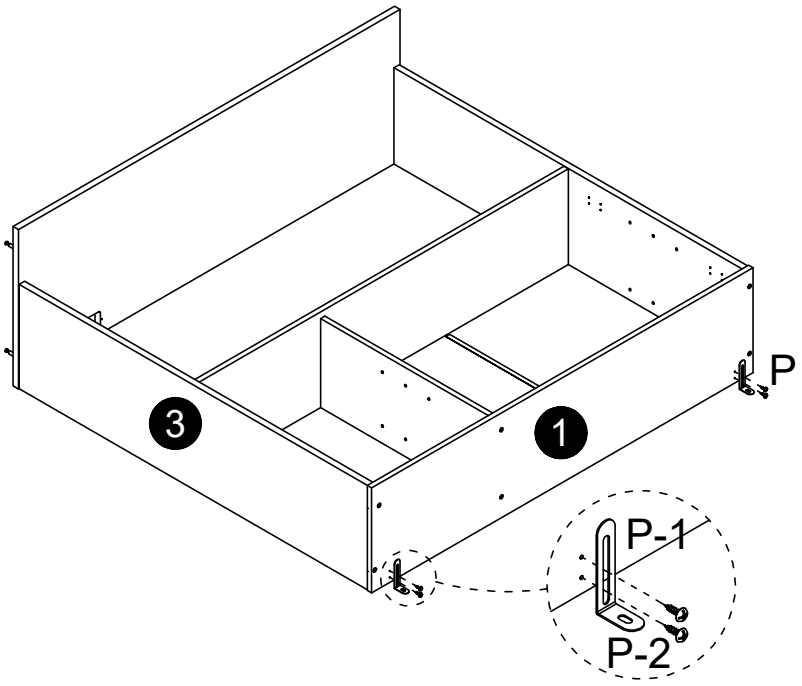

29

B x6



C x6

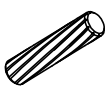

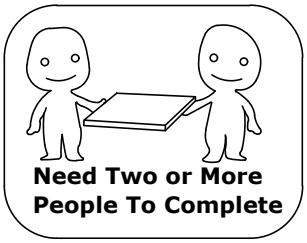

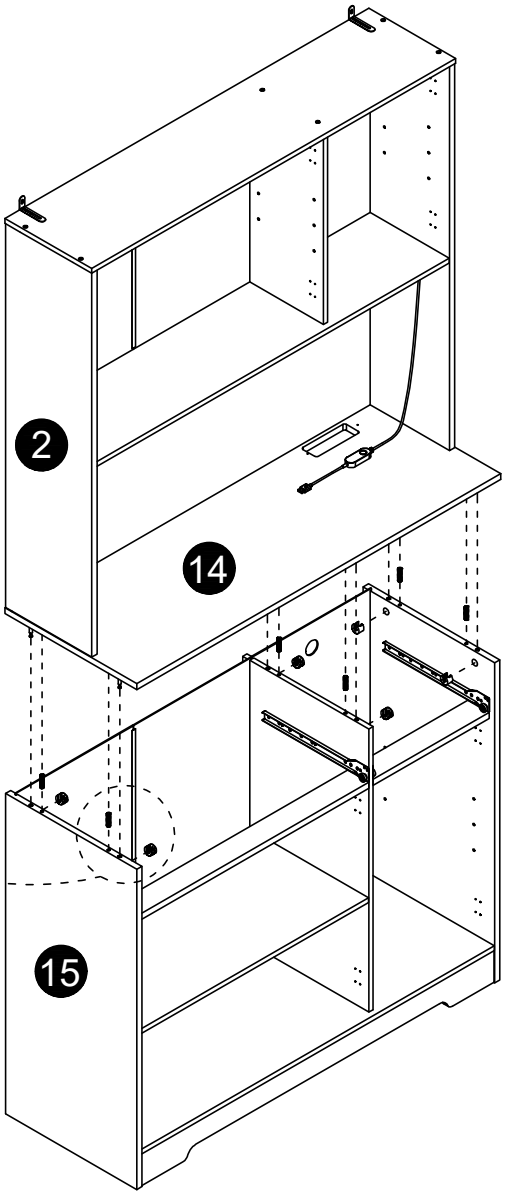

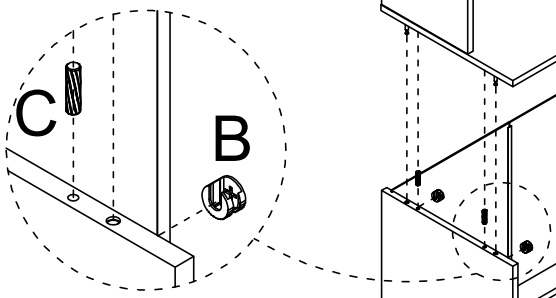

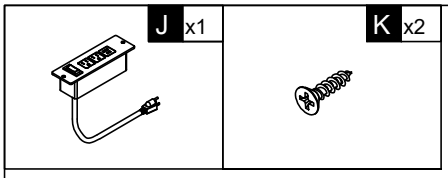
J x1
K x2

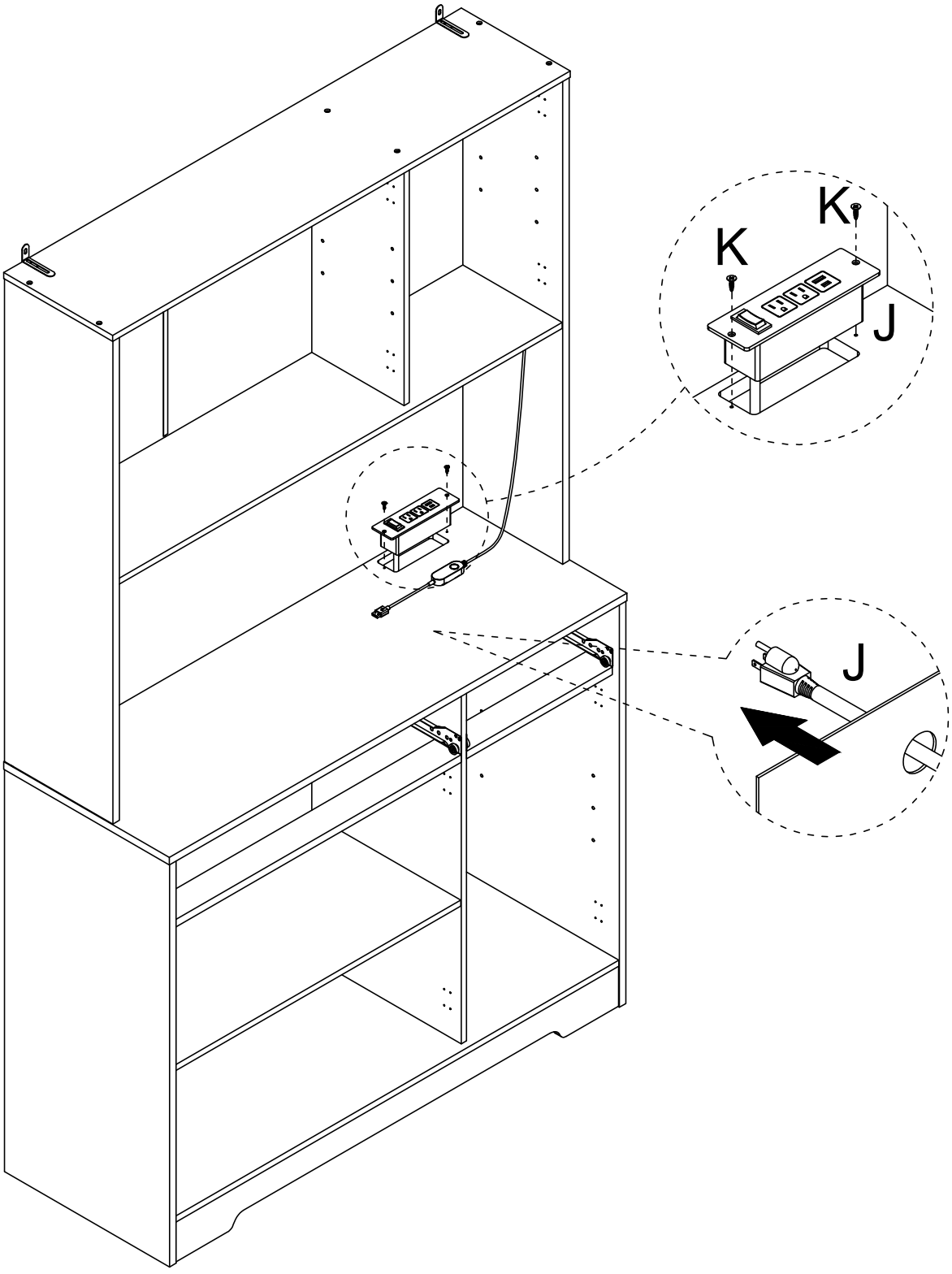
K
K
J
J

G x12



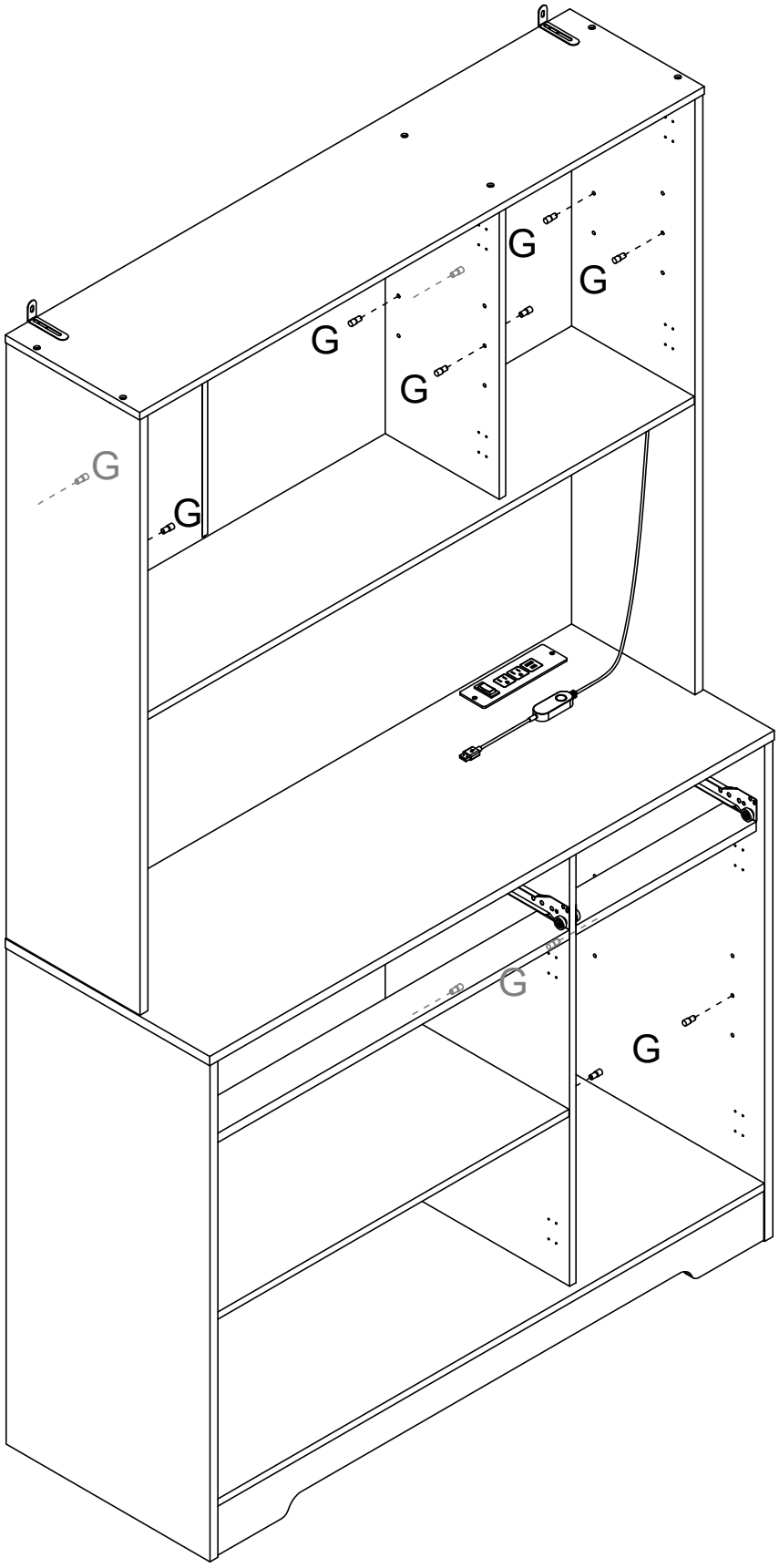

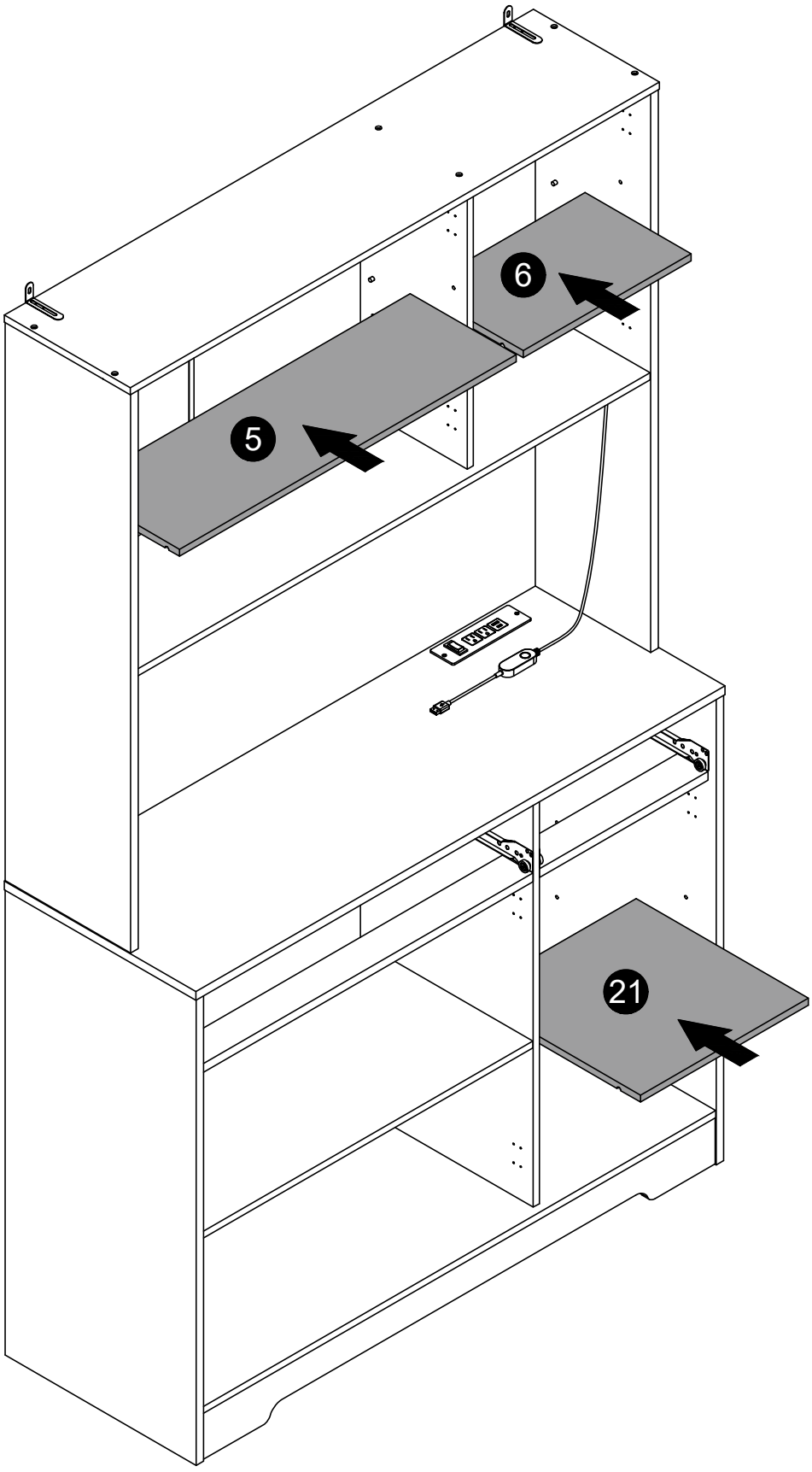
6
5
21

E x8



F x2

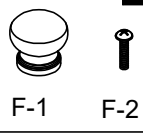

L x4

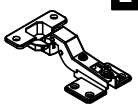

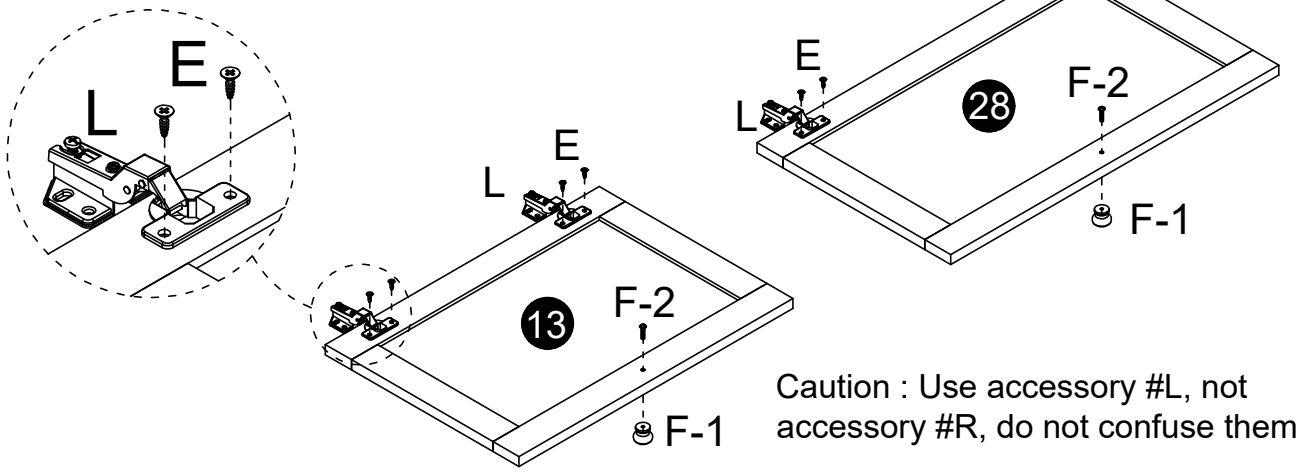

Caution : Use accessory #L, not accessory #R, do not confuse them.

E x16



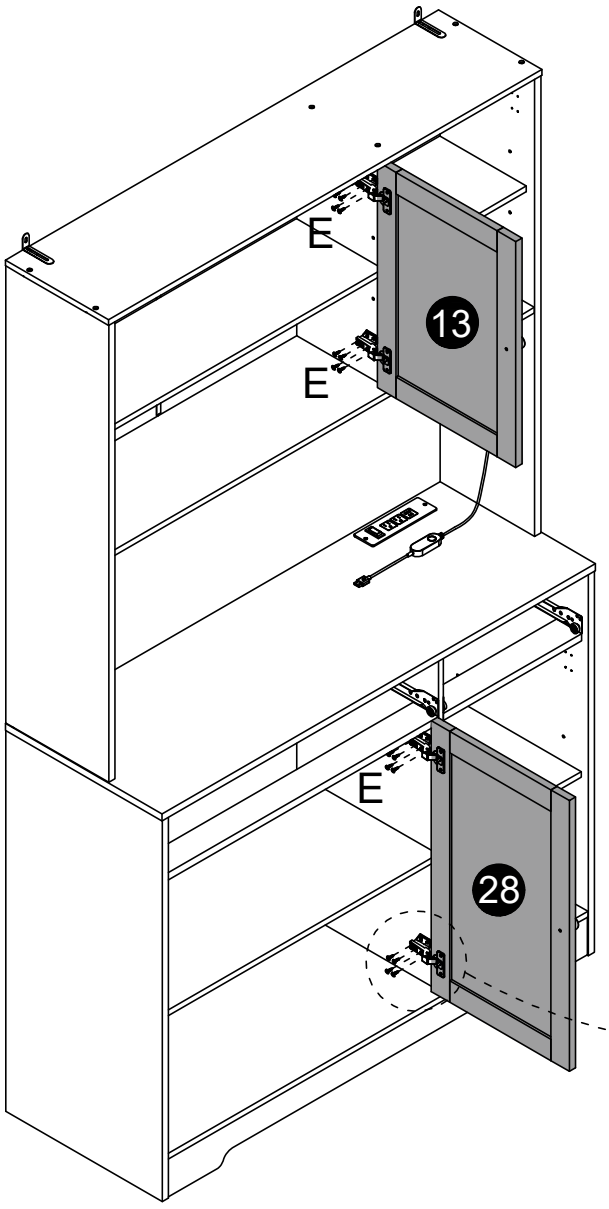

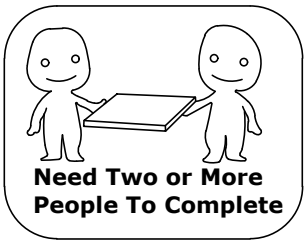

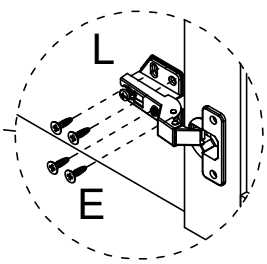

E x16

F x4

F-1 F-2

R x8

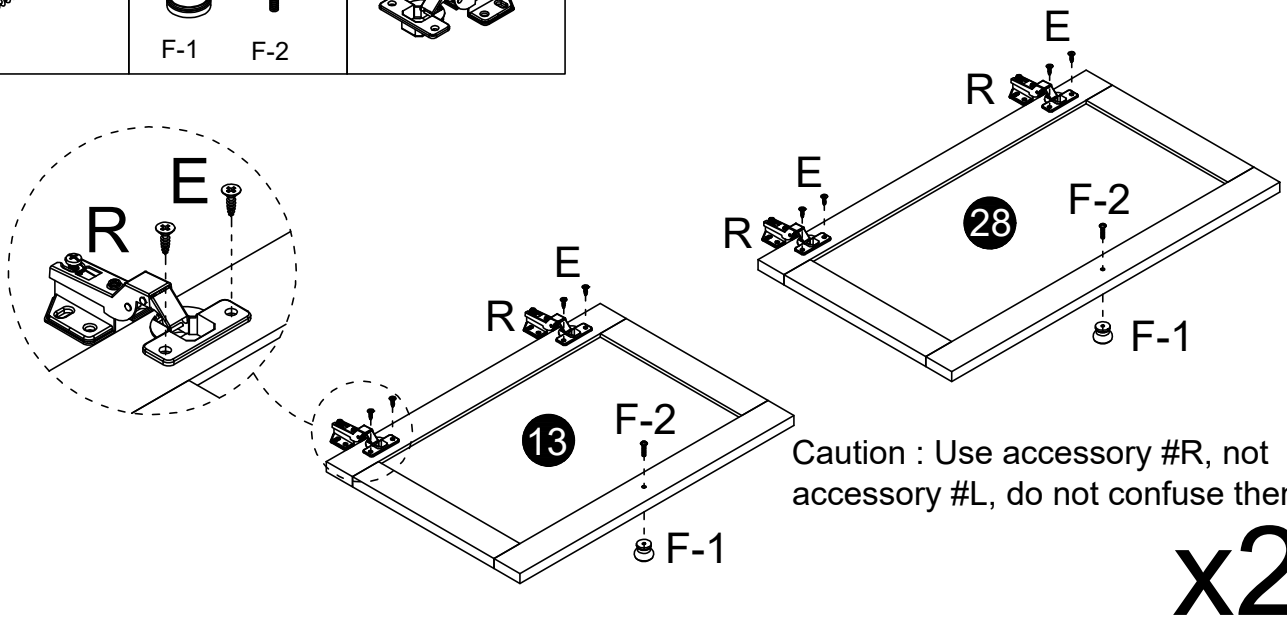

Caution : Use accessory #R, not accessory #L, do not confuse them.

x2

E x32

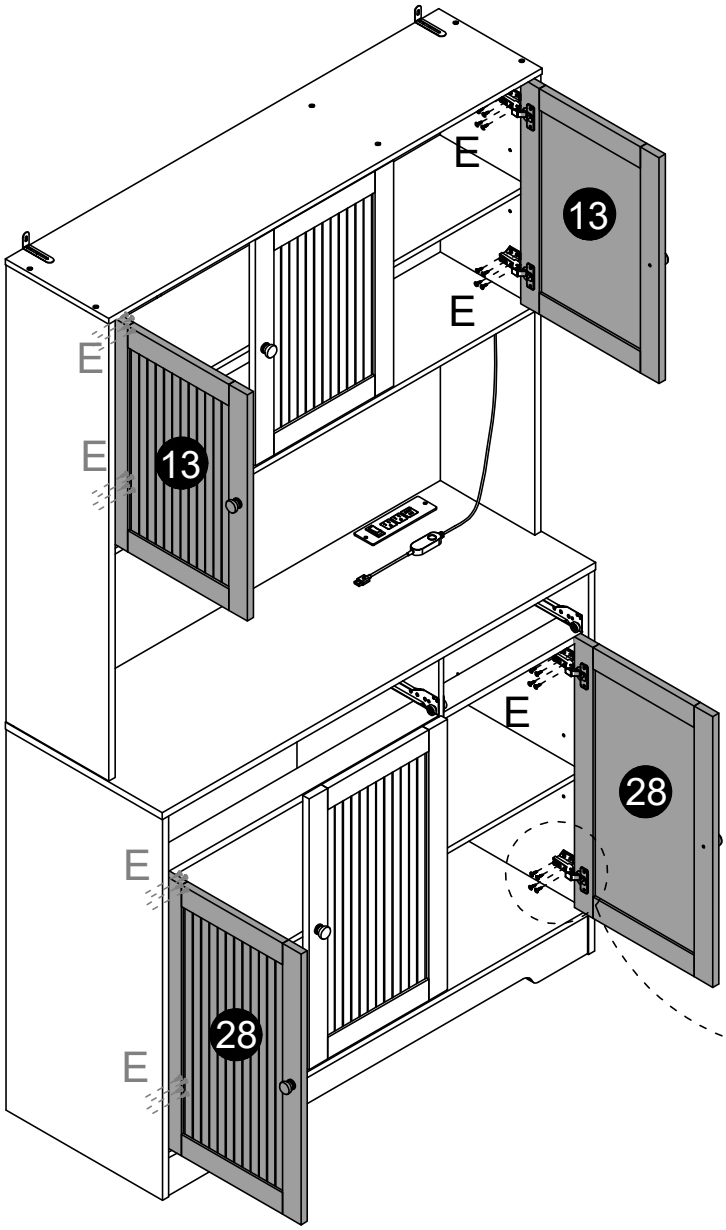

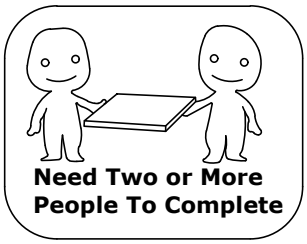

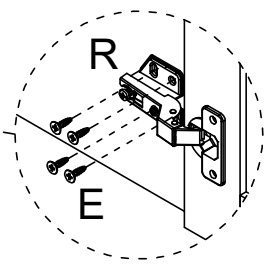

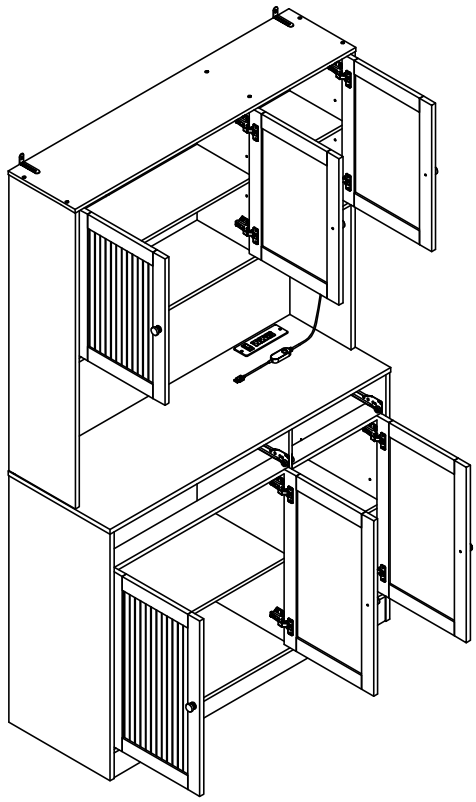

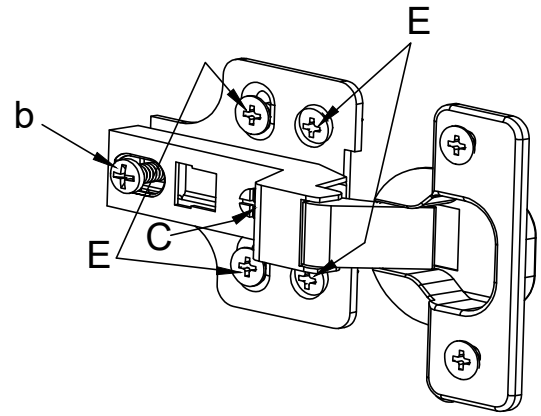

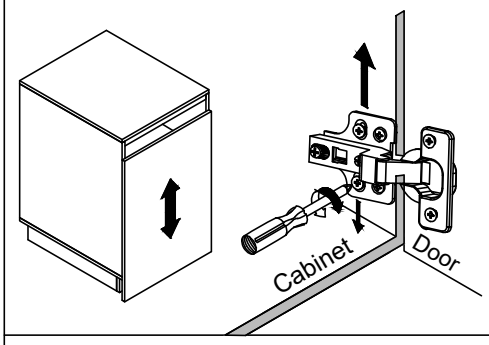

To adjust the vertical height.
Loosen the four screws "E" on both hinges. Two of them are usually in slotted holes which allows you to adjust up or down by a few mm. Then tighten back up.

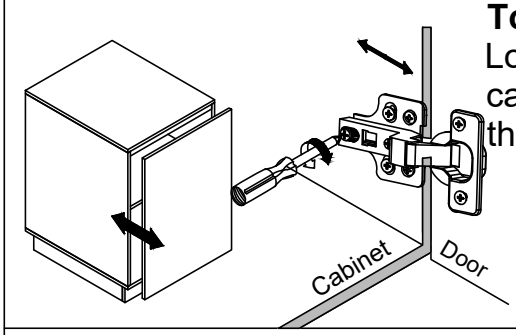

To adjust depth.
Loosen screw "b" and adjust door, if the door can not be adjusted, please loosen screw "c", then try again. Tighten screw "b" and "c".

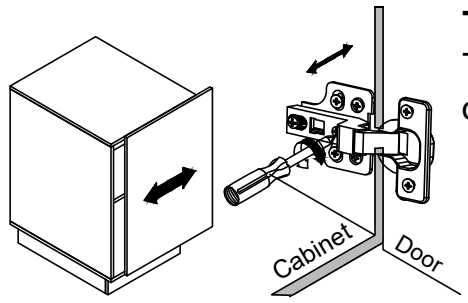

To adjust side ways.
Turning the screw "c" on BOTH hinges on each door.

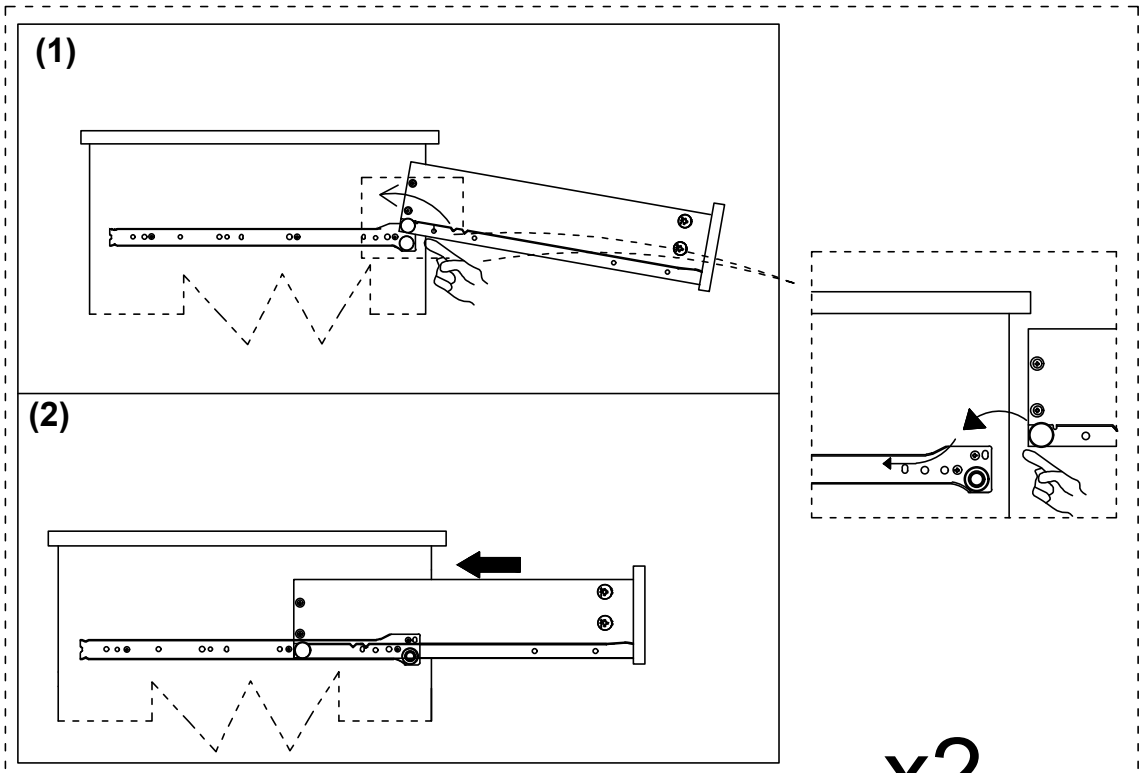

x2

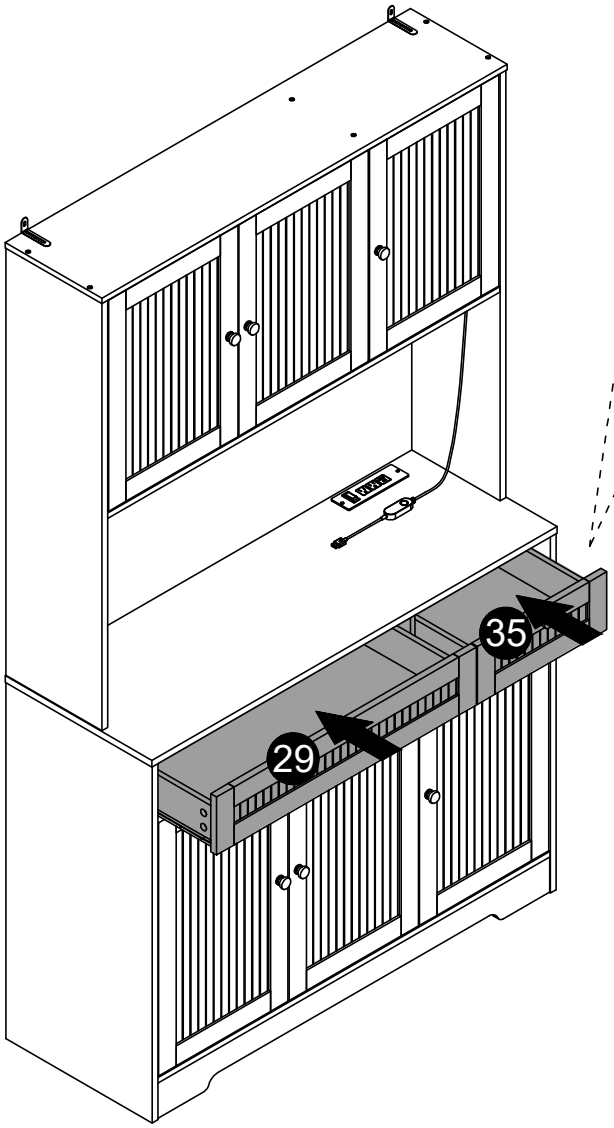

M x20



M-1



M-2

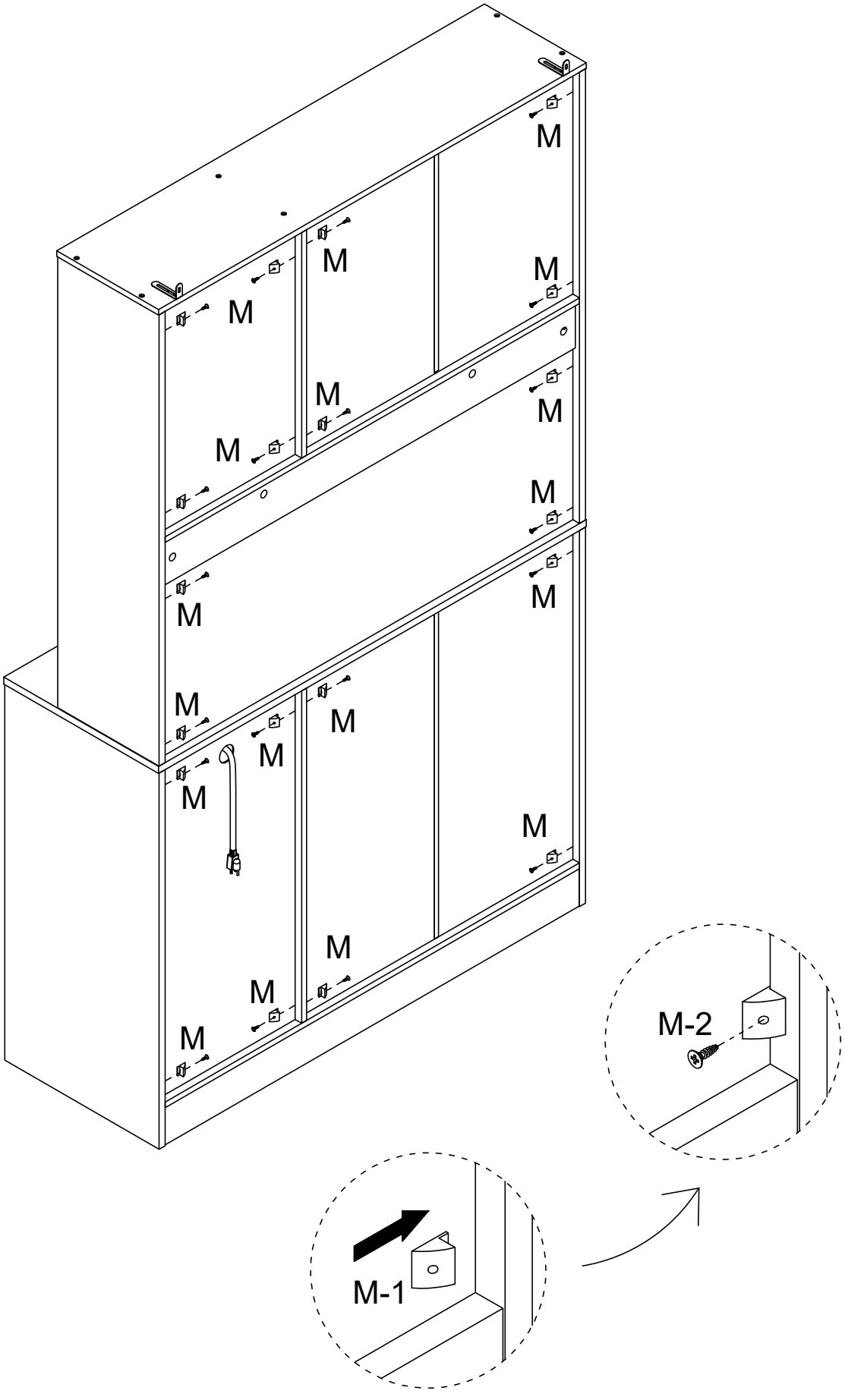

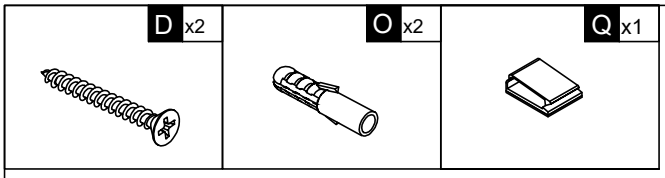

Done

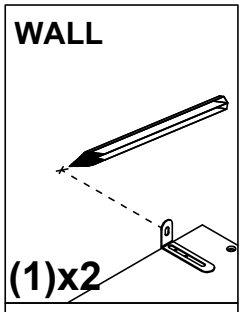

First, use a ruler to measure the approximate height of the product on the wall, and then mark it with a pen.

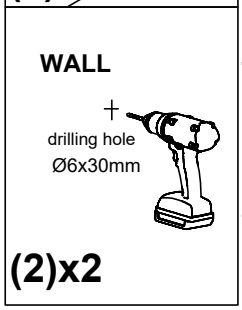

Then use a tape drill to make holes in the wall that are suitable for the product screws.

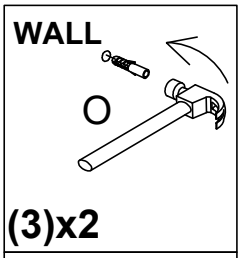

Then,put the expansion bolt into the hole

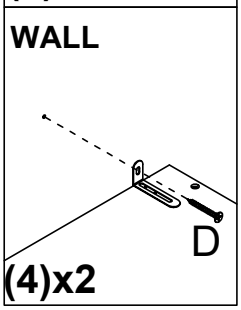

Finally,pass the matching screws throughthe "anti-rewind" and tighten themto fix them on the wall.

