Assembly Instructions

Caution : Please read all instructions before assembly.

Care & Maintenance

- For residential use only. Not intended for commercial use.
- Do not put hot items directly on furniture surface.
- Do not clean furniture with harsh cleansers or polish.
- Do not place furniture under direct sunlight.
- Do not place furniture near heating or cooling vents.
- Do not write on furniture without a padded barrier to protect the surface.
- Do not place furniture outside . For indoor use only.
- Stains may be removed with mild soap solution and damp cloth.
- Children should not climb or jump on the furniture.
- Dust and pick-up spills using a clean, non-colored, lint-free cloth.

King Bed

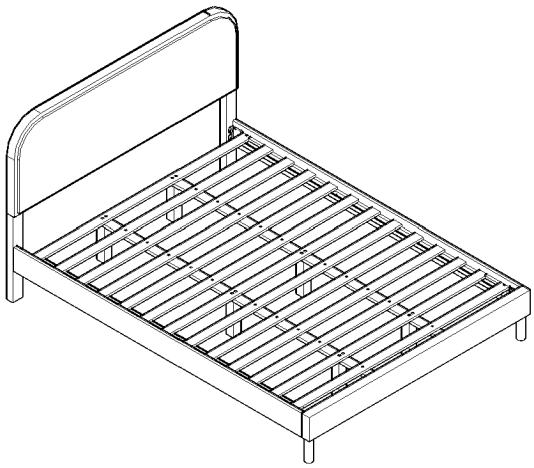



WARNING

STRANGULATION HAZARD.

NEVER place bed near windows where cords from blinds or drapes may strangle a child.
NEVER suspend strings over bed.
NEVER place items with a string,cord,or ribbon, such as hood strings or pacifier cords, around a child's neck. These items may catch on bed parts.
ALWAYS follow assembly instructions.

WARNING!

Not intended for children under the age of six.INFANTS HAVE DIED FROM BECOMING ENTRAPPED IN BEDS. Openings in and between bed parts can entrap the neck and head of a small child. NEVER use bed for child under the age of six.

The mattress must be appropriately sized for the bed. If the mattress is undersized, dangerous gaps can exist and a person can become entrapped or entangled in the frame and suffocate.

NOTE: This Bed is NOT a TOY.
Keep your child/children away during the assembly process.
This BED is HEAVY.
To prevent injury to yourself or damage to the product a minimum of two adults are required whenever moving or lifting it.

Parts List

Label	Picture	Description	QTY
A	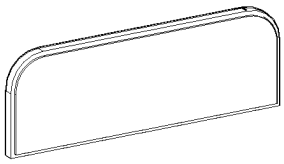	Headboard	1
BL	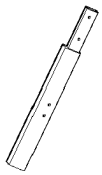	Headboard Leg -Left	1
BR	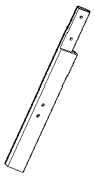	Headboard Leg -Right	1
C	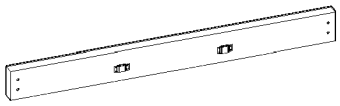	Footboard	1
D	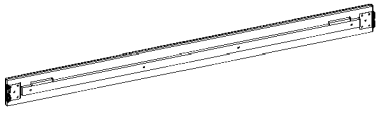	Side Panel	2
E		Bed Leg	2
F	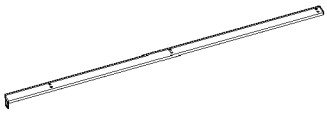	Center Rail	2

G		Center Leg	6
H	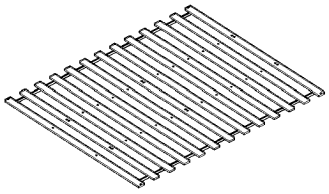	Slats	13 (1set)

Hardware

Label	Picture	Description	QTY
①		M4 Allen Wrench	1
②		M5 Allen Wrench	1
③		Bolt (M6x50mm)	12
④	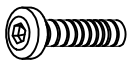	Bolt (M8x35mm)	4
⑤		Screw (M4x20mm)	2
⑥		Screw (M4x25mm)	24
⑦	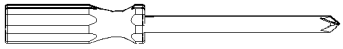	Screwdriver (Not provided)	1

Assembly Preparation

Before Beginning Assembly:

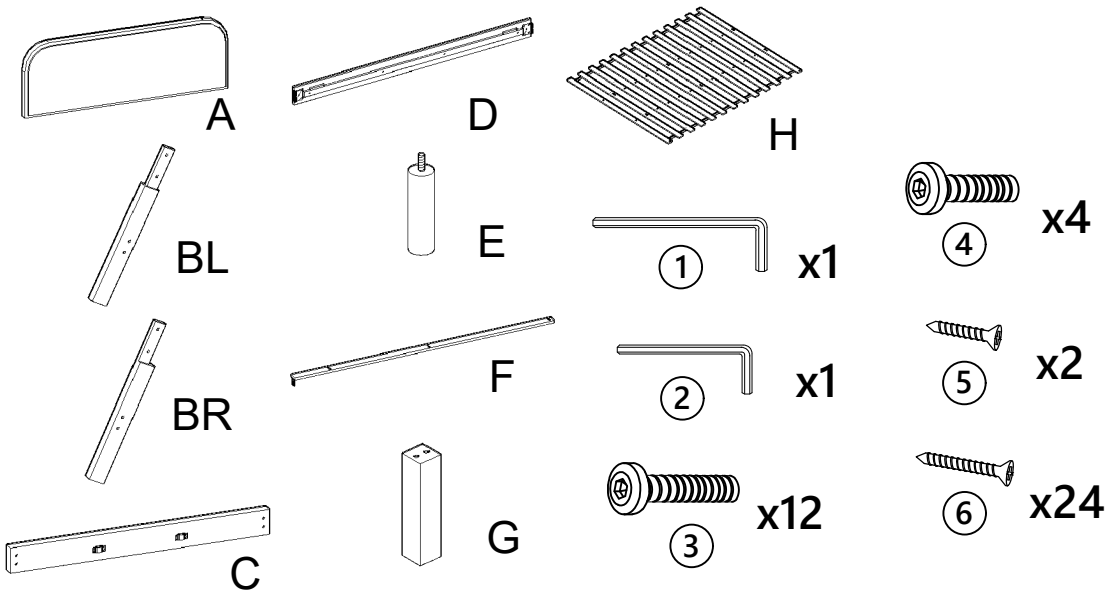

- Read instructions,cover to cover-
- Two adults are required for assembly-
- Do not assembly on flooring or carpet-
- Assembly on a clean non-marring surface (packing foam)-
- Save all packaging materials until assembly is complete-

Assembly Steps

Overview

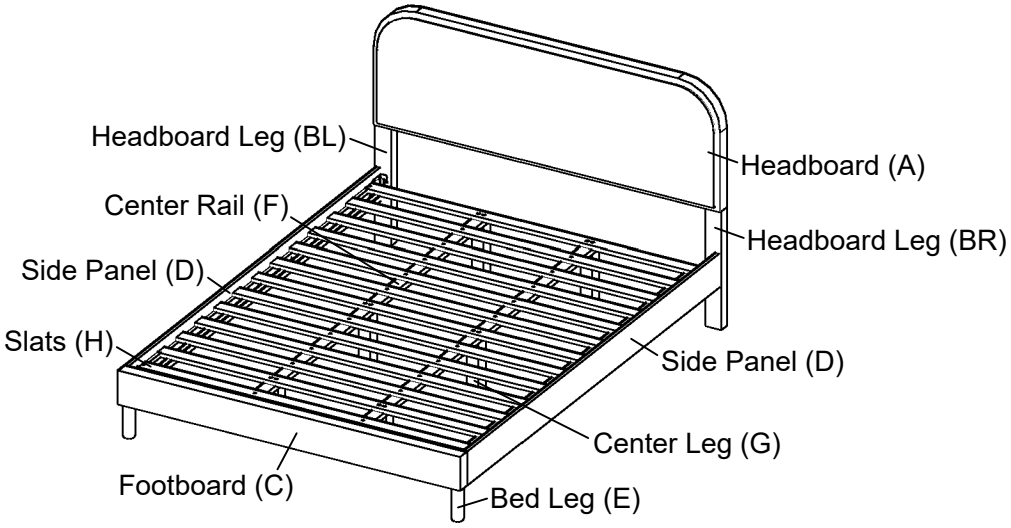

FRONT FACING

Assembly takes approximately 30 minutes with two adults. To give you an overview of the Bed parts, the above picture is provided to help you put the various parts into perspective. Please read through the instructions below to familiarize yourself with the parts and steps before assembly.

Step 1

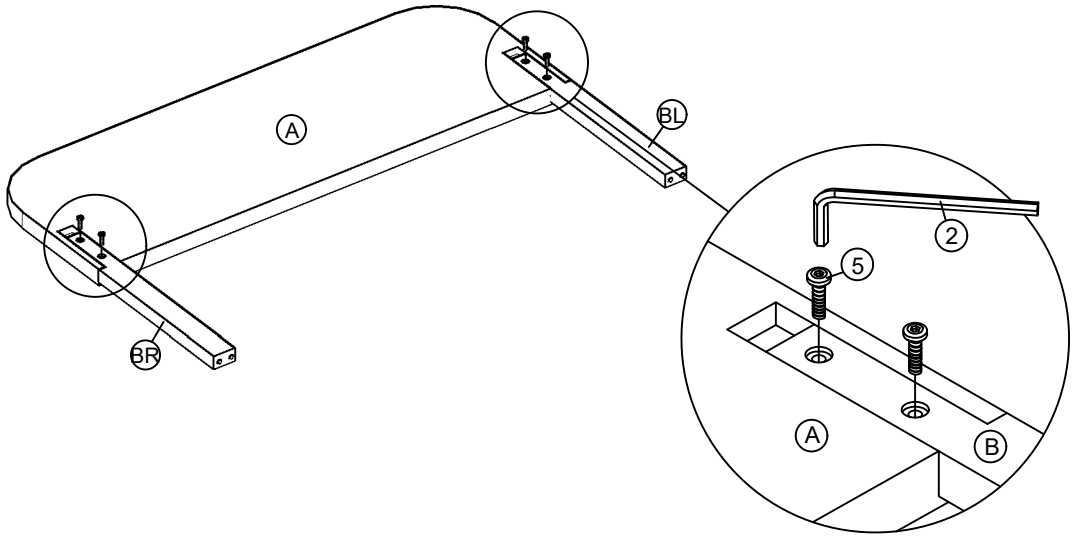

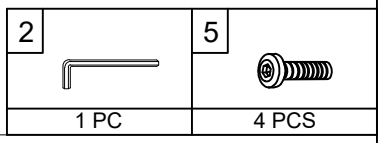

Attach the Headboard(A) to Headboard Leg(BL&BR) by using Bolts (⑤) with M5 Allen Wrench (②).

Step 2

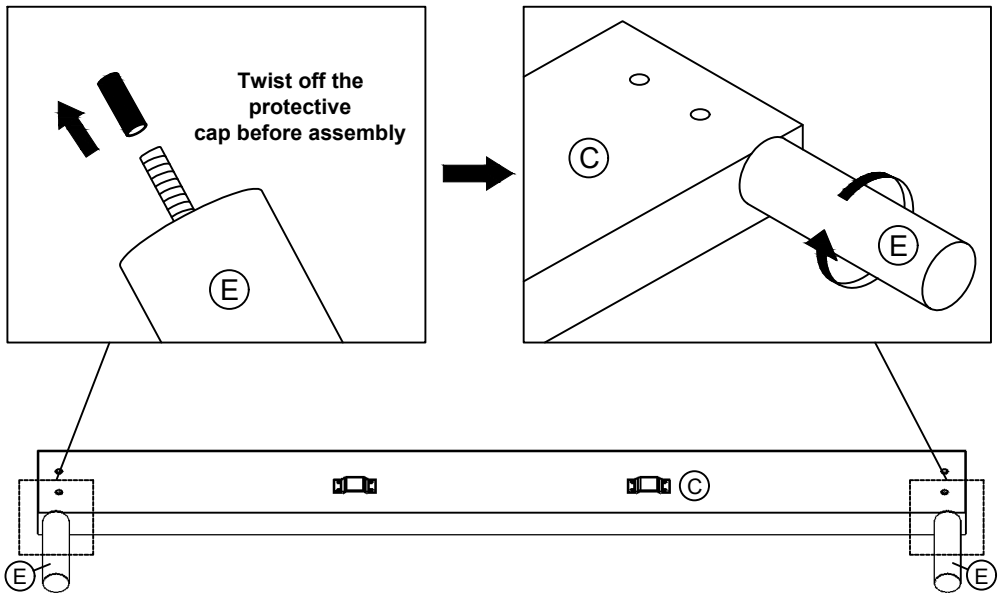

Attach the Footboard(C) to Bed Leg(E) as shown.

Step 3

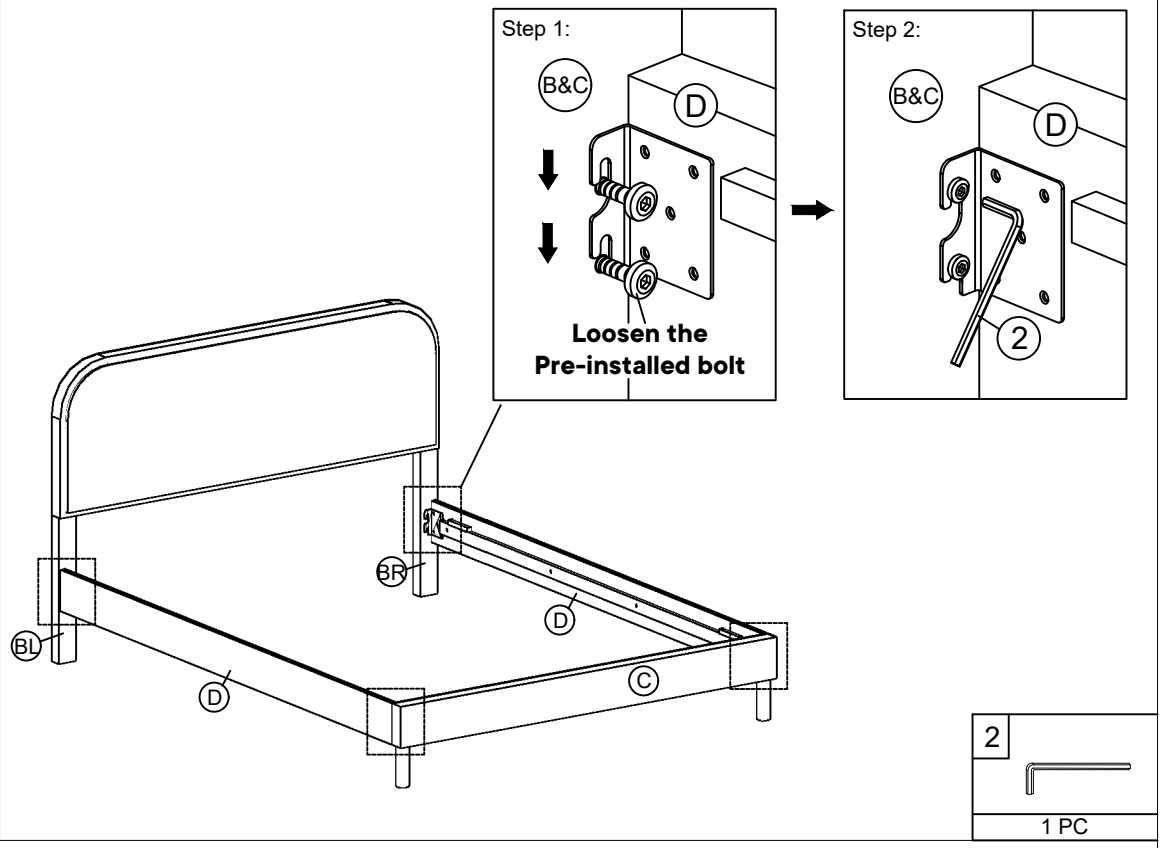

Loosen the bolts slightly on the Headboard Leg (BL&BR) ,then attach the Side Panel (D) to the Footboard (C) ,tighten the bolts using the M5 Allen Wrench (②)

Step 4

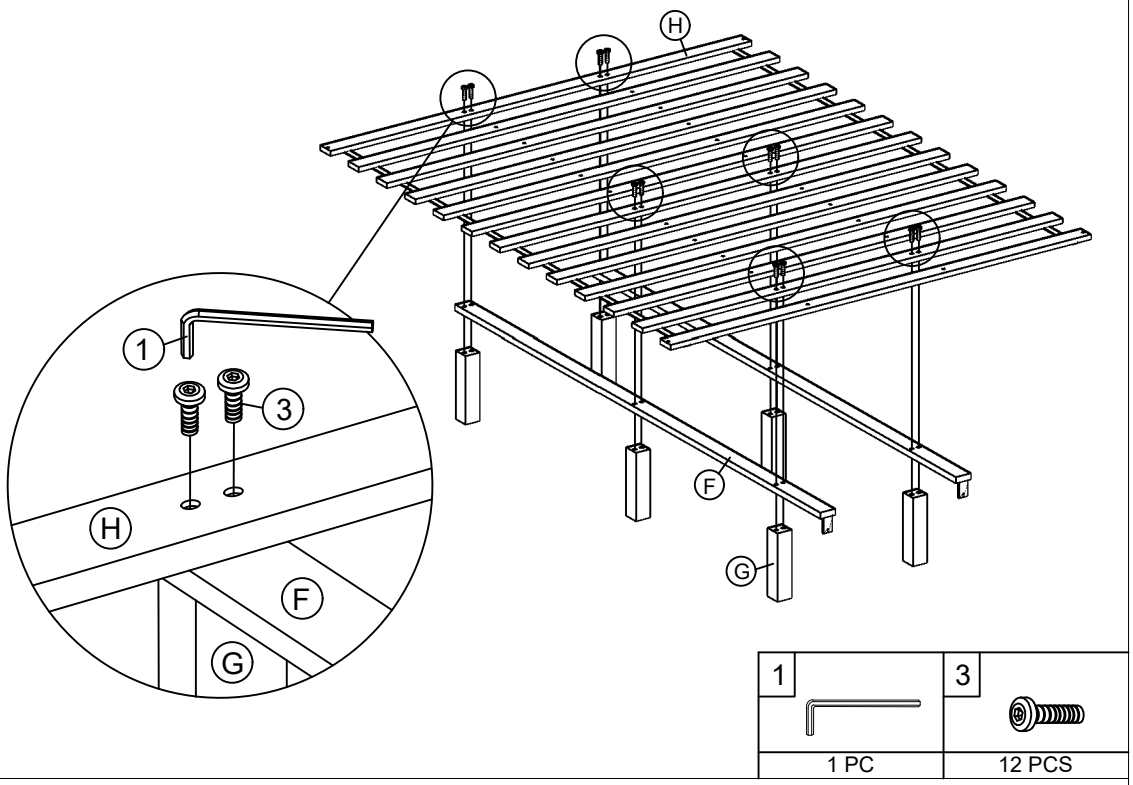

Attach Center Legs (G) and Slats (H) to the Center Rail (F) by using Bolts (③) with M4 Allen Wrench (①).

Step 5

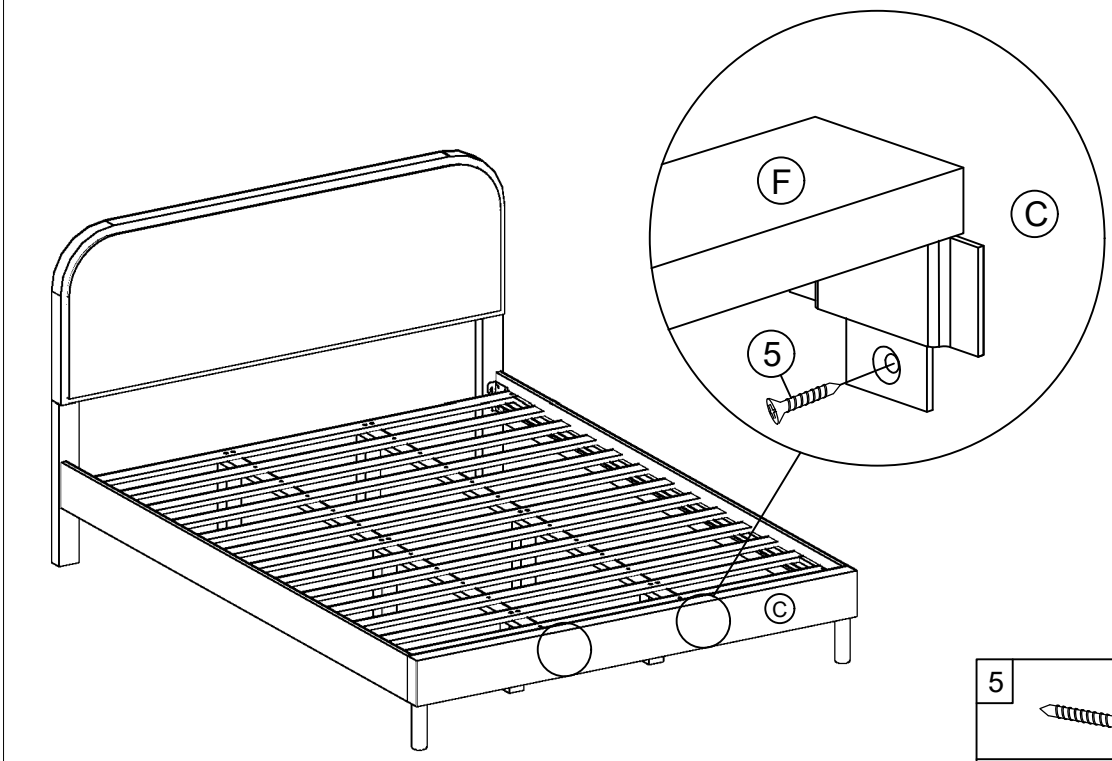

5

2 PCS

Attach assembled Center Rail(F) to the Footboard (C) by using Screws (⑤) and Screwdriver (Not Provided).

Step 6

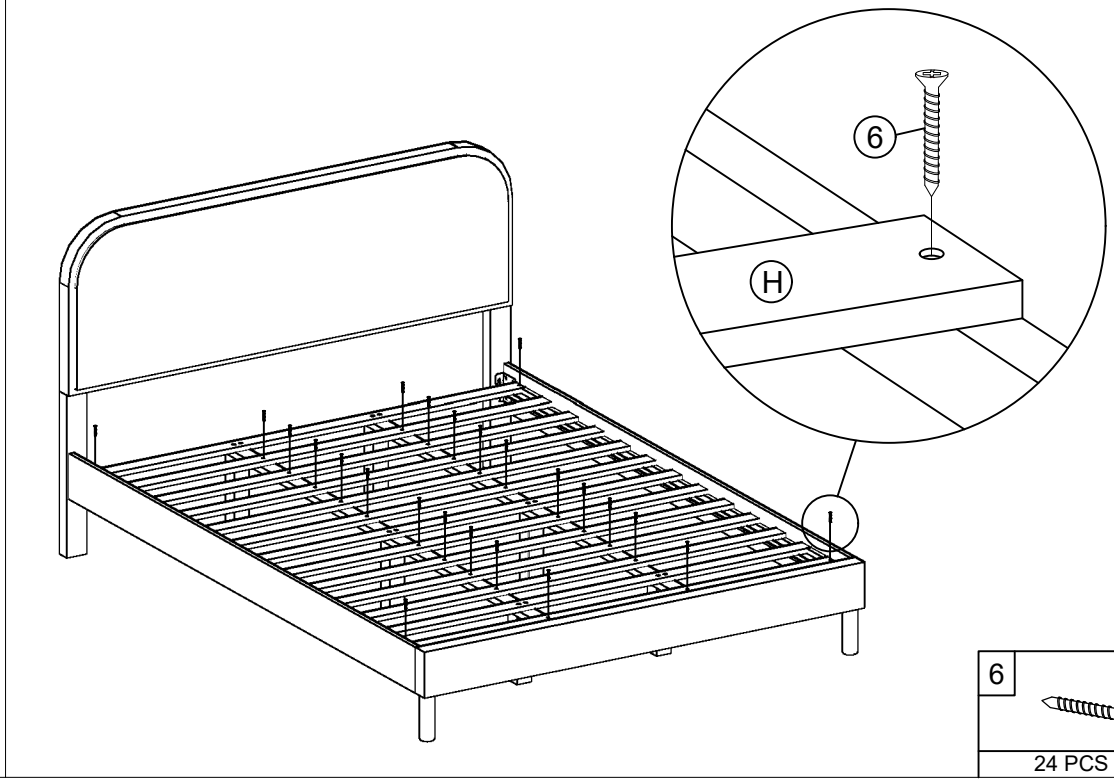

6

24 PCS

Attach all Slats (H) to the rail on Side Panel (D) by using Screws (⑥) and Screwdriver (Not Provided).

Step 7

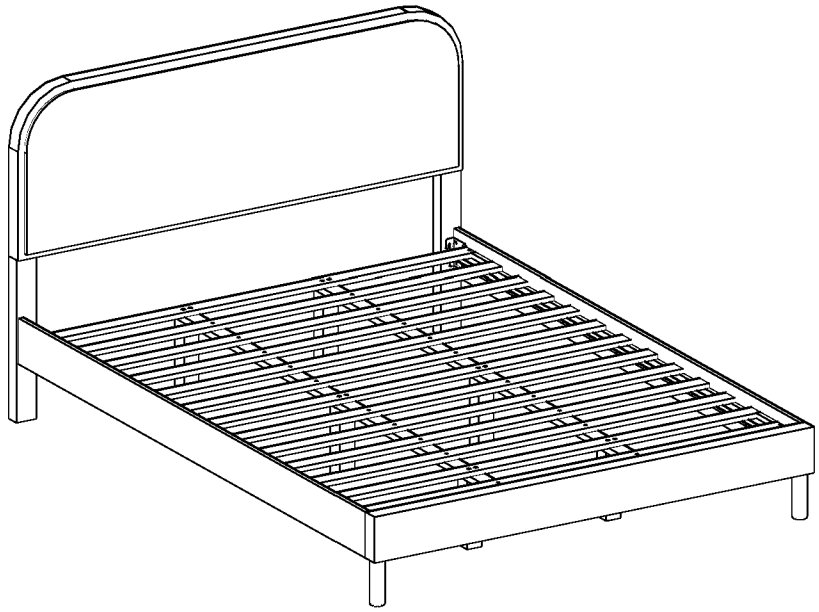

Place the Bed on a LEVEL SURFACE.
Inspect it and make sure all parts are adequately connected.
Push down gently and shake the bed slightly.
This would help to align all the parts at all the joint areas.

CAUTION 1: When tightening these screws, tighten sequentially.
Do not fully tighten any screw before tightening the others.
This would cause the frame to warp.
If there is still wobbles, loosen the screws and execute this same process.DO NOT tighten any screw fully and then towards the next one.
WARNING!! IF BED IS NOT STABLE , IT COULD LEAD TO DAMAGING THE PRODUCT.
Ensure all screws are fully locked into position.
The bed is ready to be used.
Caution 2: This bed can only be used on a flat, level surface.