sku:HZ-YFS04OT

Steel Wicker Ottoman

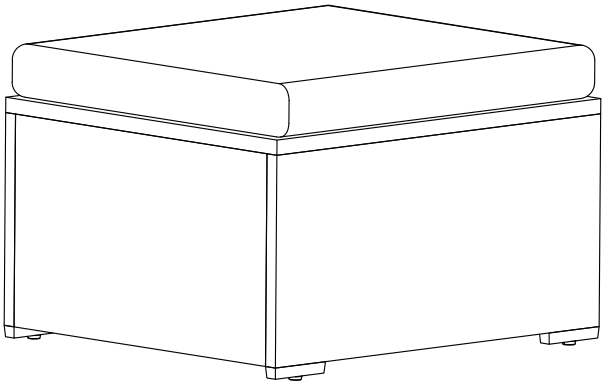

Thank you for choosing us!

Our goal is to provide high quality outdoor furniture with outstanding customer service-all at an affordable price. Please let us know how we are doing!

Problems?

(Missing pieces, wrong pieces...)

We will fix it immediately. Send us an email at **aftersaledirect@gmail.com**.

Happy?

Please leave us a review!
You can make others happy too!

Care & Maintenance

Caution: You must read this before you proceed

- Not for commercial use. For residential use only.
- Prolonged exposure to rain may cause rusting which can stain floors.
- Do not put hot items directly on furniture surface.
- Do not clean furniture with harsh cleansers or polish.
- To obtain the longest lifespan of your outdoor products, minimizing exposure to direct sunlight is recommended.
- Children should not climb or jump on the furniture.
- Do not write on furniture without a padded barrier to protect the surface.
- To obtain the longest lifespan of your outdoor products, avoid extended and lengthy exposure to rain, snow, and direct sunshine.
  Whenever possible cover the product and /or place under patio or awnings.
- Do not place the product in stone areas or areas that absorb too much sunlight.
- Stains may be removed with mild soap solution and damp cloth.
- Keep away from sources of ignition.
- High-pressure water guns must not be used for cleaning. Dust and pick-up spills using a clean, non-colored, lint-free cloth.

Tip: We recommend flattening the boxes to use as a protective work surface, or setting up your new furniture on a soft floor like a carpet.

How to Put on the Cushion Cover

1

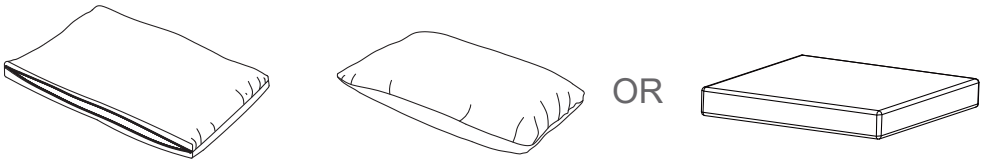

1.Take the cushion covers and inners out of the carton.

2

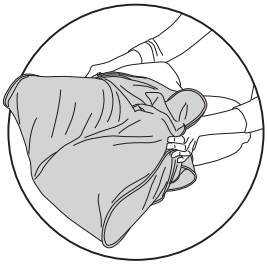

2.Fold the inner in half, pushing the sides together,then begin to slide the cover onto it.

3

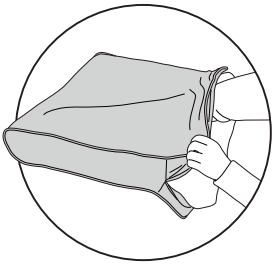

3.Align both far corners, then gently compress insert while fitting cover around it.

4



4.To avoid a stuck zipper, please pull the fabric away from the zipper before moving forward.

5

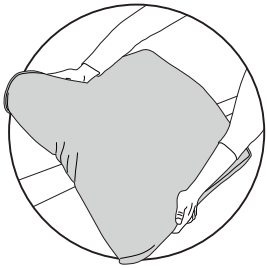

5.When all done, please pat the cushion or give it a little shake to make it more flat.

Care & Cleaning Guidelines

The covers are machine washable.Before washing, please zip the cover up to avoid catching other clothes.
You can clean the dust on the chair / table / footstool with a damp cloth.

NOTE:

Vaccum compressed cushions,
Will return to normal shape after 5-7 days use.

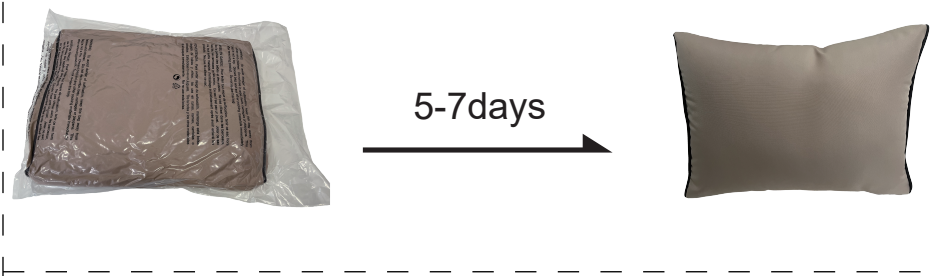

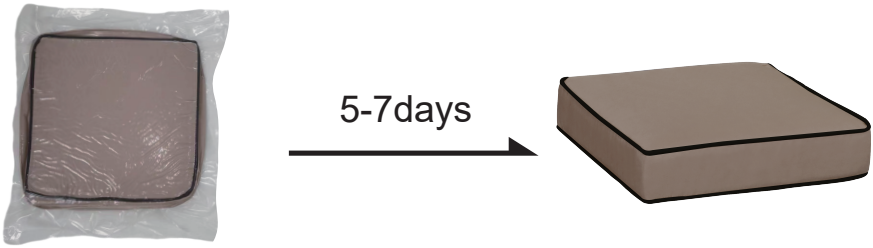

COMPONENT LIST - OTTOMAN ×2

Item no.	Reference Image	Description	Qty.
A	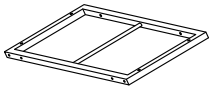	Leg Panel	2
B	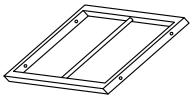	Leg Panel	2
C	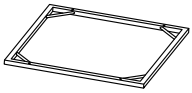	Top Panel	1
D		Plastic Foot	4
E		Allen Key	1
F		M6*30 Head Cap Screw	12
G		Washer	12
H		M6*25 Head Cap Screw	8
I		Screw Foot	4
J	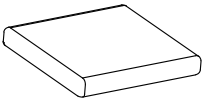	Cushion	1

NOTE:
Do NOT tighten any screws fully first until you have tightened all the screws.
This may cause the frame to warp.
If there is still wobbles or screw holes cannot be aligned, loosen the screws and tighten sequentially.
If the Ottoman is not stable it could lead to damage to the product.

01



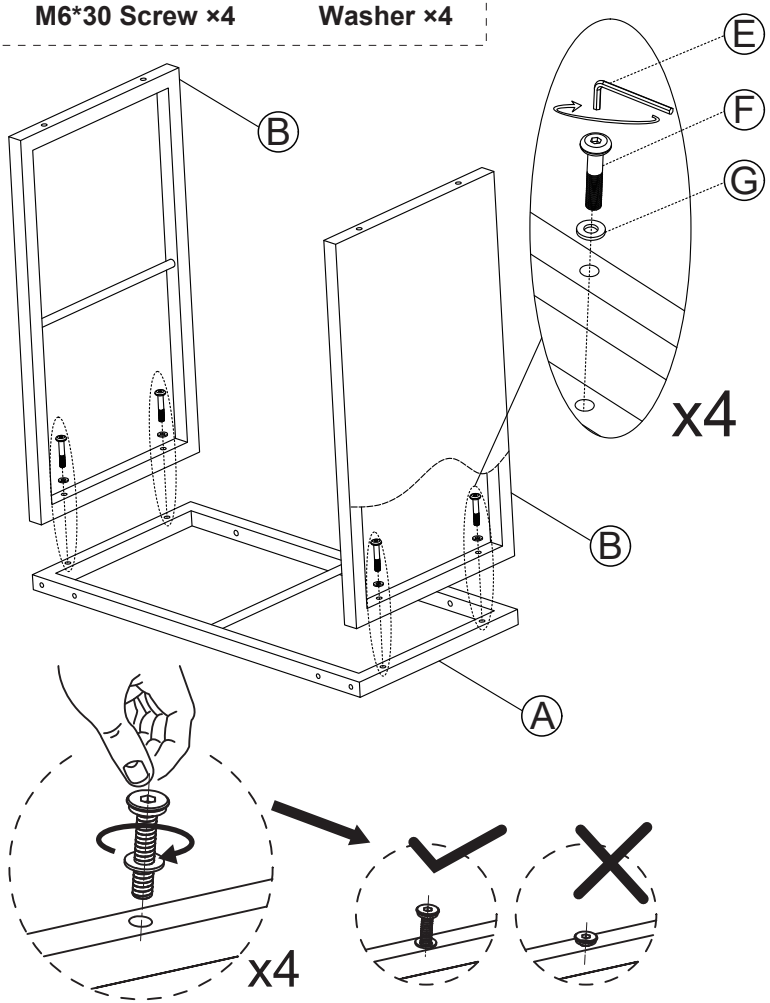

NOTE:DO NOT TIGHTEN THE SCREWS COMPLETELY.

02



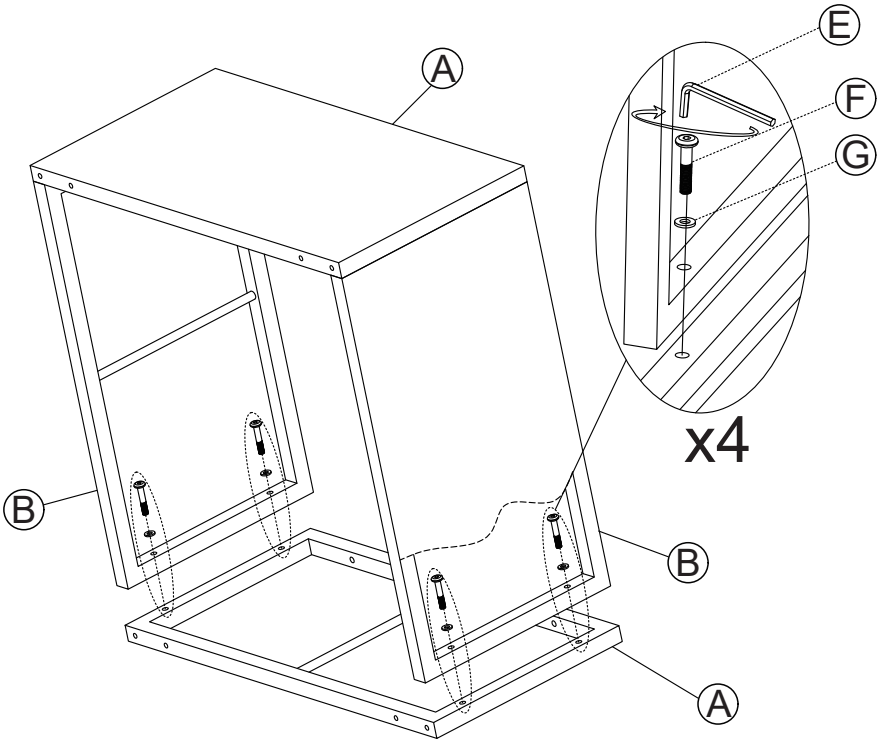

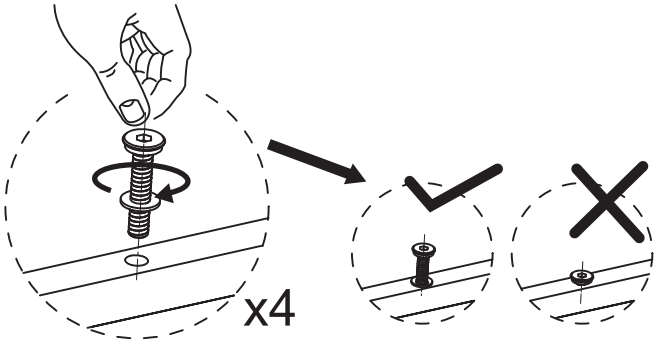

NOTE:DO NOT TIGHTEN THE SCREWS COMPLETELY.

03



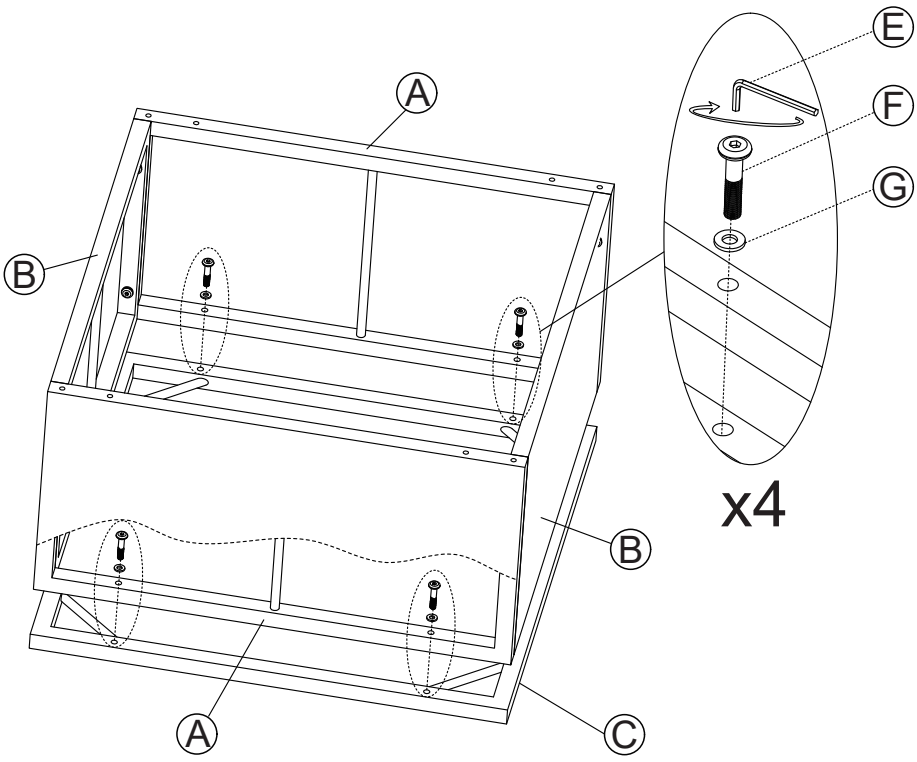

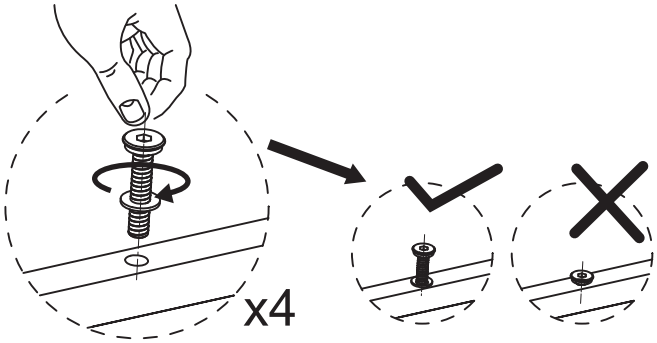

NOTE:DO NOT TIGHTEN THE SCREWS COMPLETELY.

04

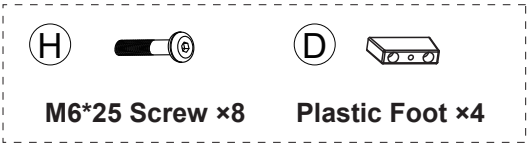

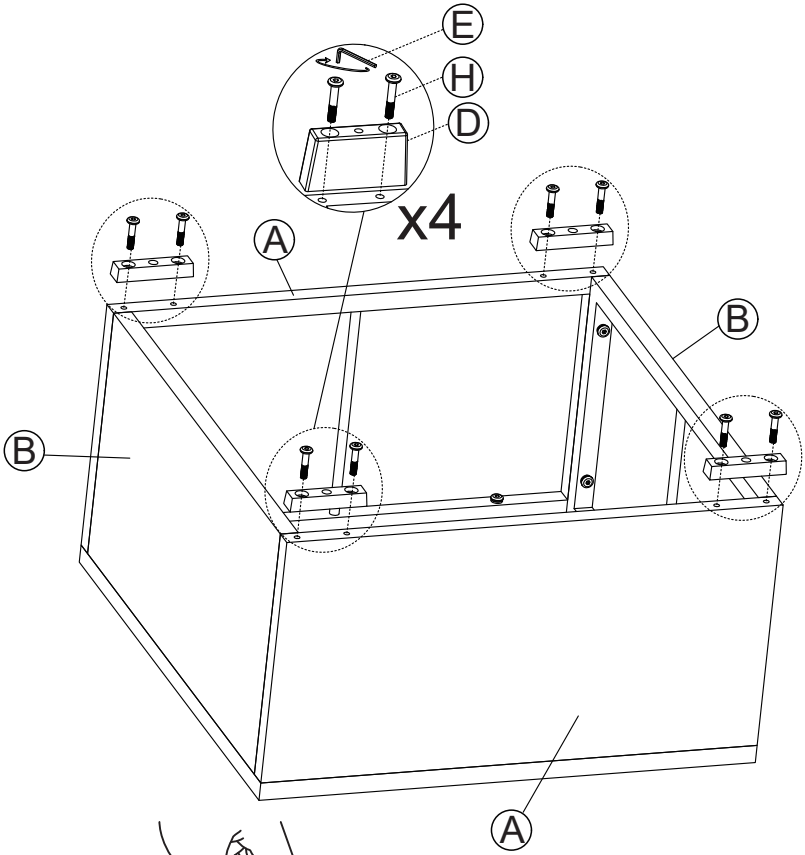

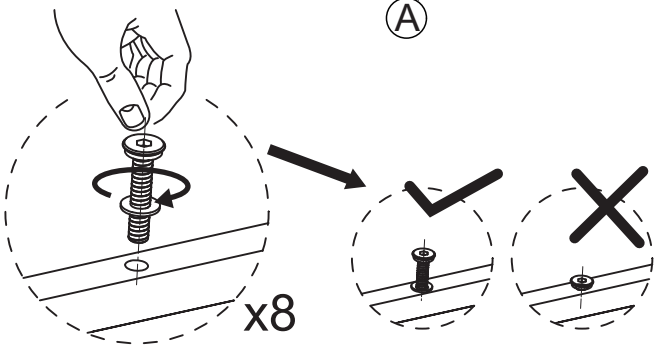

NOTE:DO NOT TIGHTEN THE SCREWS COMPLETELY.

05

Ⓘ



Screw Foot ×4

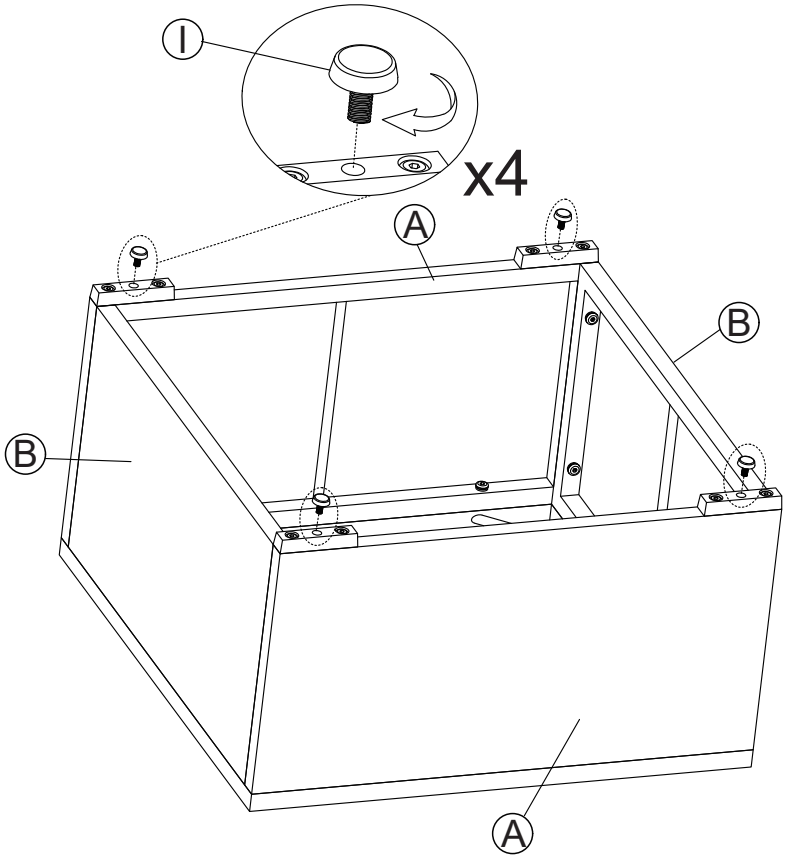

06 Tighten all 20 Screws into place with Allen Wrench.

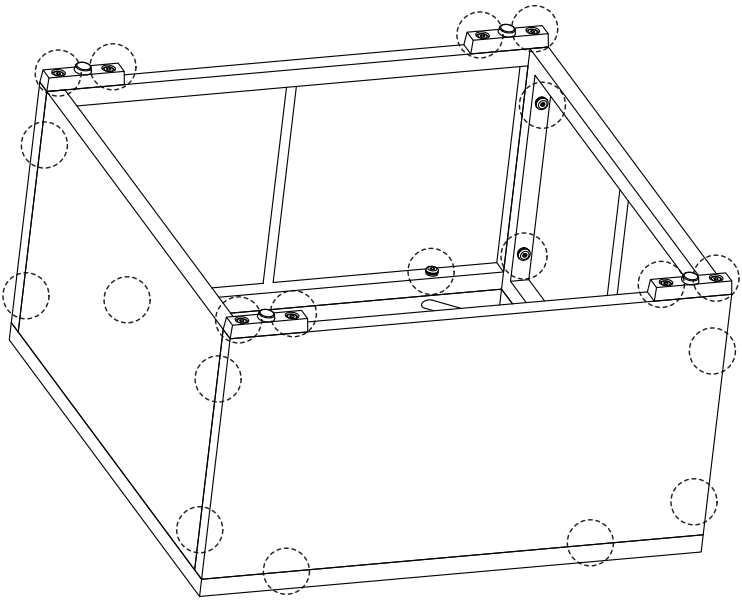

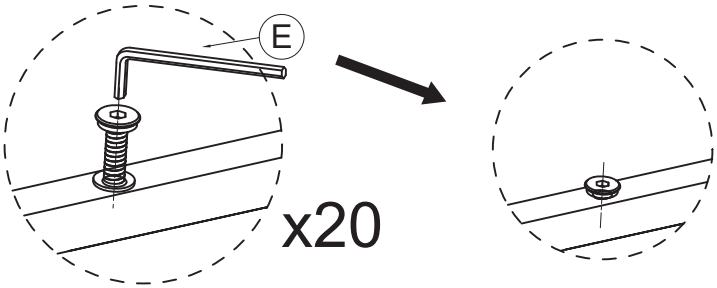

NOTE:IF ANY SCREW HOLES CANNOT BE ALIGNED, LOOSEN ALL THE SCREWS AND GO BACK STEP 1 AND RESTART ASSEMBLY.

07

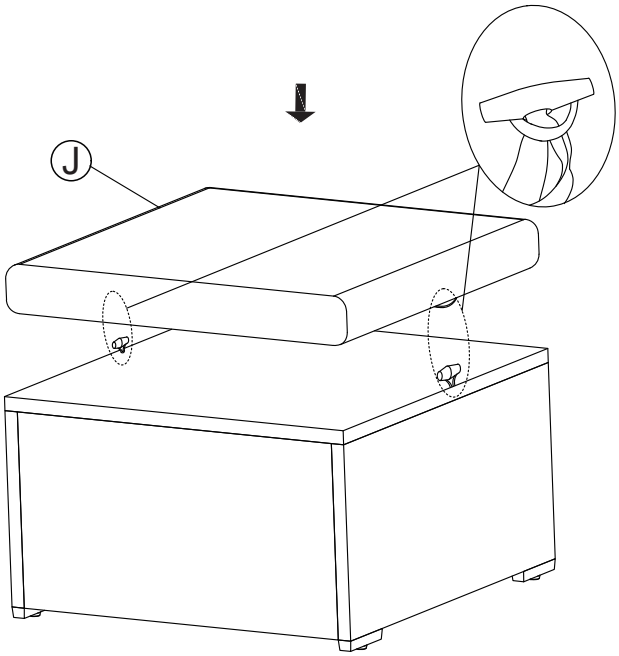
J

08

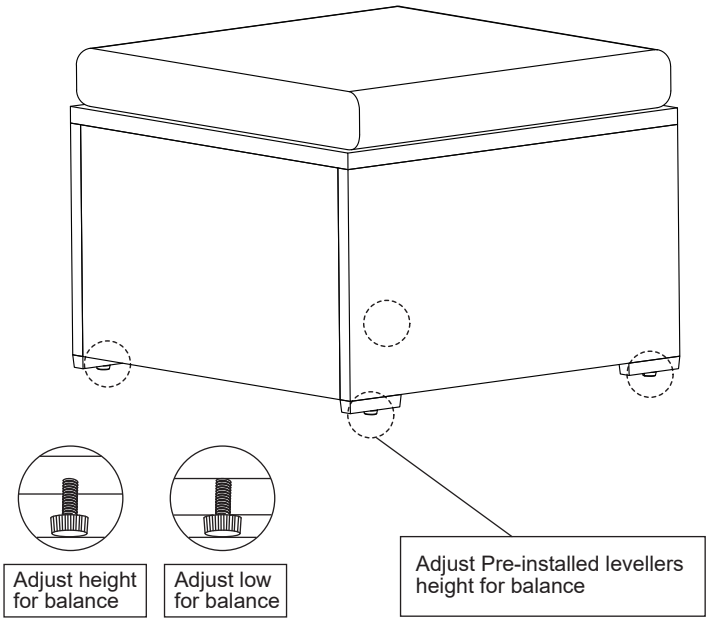
Adjust height for balance
Adjust low for balance
Adjust Pre-installed levellers height for balance