Model No.: DC1163-7B/72

Ceiling Fan

Installation Manual

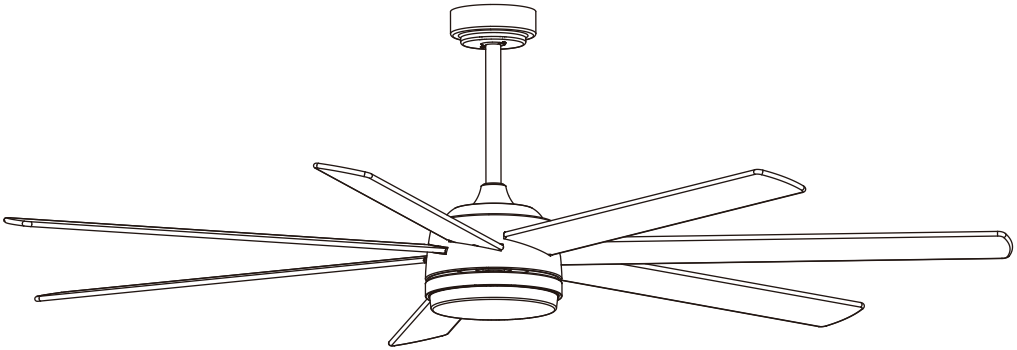

THANK YOU

We appreciate the trust and confidence you have placed in us through the purchase of this ceiling fan.We strive to continually create quality products designed to enhance your home.Thank you for choosing us!

Visit www.pmwfan.com for further assistance.

SAFETY PRECAUTIONS

1. 
The fan can only operate properly with all blades installed. If the fan is started without blades, it will beep and automatically shut off.

2. 
If you are unfamiliar with electrical installations, please consult or hire a qualified electrician.

3. 
Before operating any electrical connections of the fan, be sure to disconnect the main power by removing the fuse or turning off the circuit breaker.

4. 
Do not use the fan with a dimmer switch or a speed controler together, as it may damage the fan. It should only be operated using its own built-inspeed settings.

5. 
The mounting point for the fan must be capable of supportingat least 100 pounds(45kg).If installing on a ceiling outlet box, use the mounting screws provided. Most outlet boxes typically used for installing lighting fixtures cannot be used for installing fans and may need to be replaced.If in doubt, please consult a licensed electrician.

6. 
To reduce the risk of electric shock, this fan must be installed with an isolating wall switch.

7. Ensure the fan's electrical connections are properly grounded to prevent any electrical ha zards.

8. When deciding where to mount the fan, please ensure that there is at least 30 inches (76 cm)of space between the fan and any walls or other obstacles that its blades might hit. The greater this distance, the more effective the airflow generated will be. After installing, please ensure that the blades are at least 7.5 feet (2.3 meters) above the ground.

9. When complete, check that all screws and fasteners are tightened to avoid noise from loose parts.

10. Before changing the direction of rotation, ensure that the fan has completely come to a stop to avoid further damaging the motor.

11. Fan fasteners can loosen over time. Inspect the key components of the fan, such as the connections of blades ,screws, and bracket , at least once a year to ensure everything remains secure.

12. If the fan experiences abnormal rotation or vibration, please stop using it and contact the manufacturer or a professional.

13. Turn off the fan before cleaning. Please use dry cloth or slightly wet one instead of using water or cleaning agent.

Note: The important warnings and instructions outlined in this manual do not guarantee coverage of all possible scenarios that may occur.

WARNING: Changes or modifications to this unit not expressly approved by the party responsible for compliance could void the user's authority to operate the equipment.

NOTE: This equipment has been tested and found to comply with the limits for a Class B digital device, pursuant to Part 15 of the FCC Rules. These limits are designed to provide reasonable protection against harmful interference in a residential installation. This equipment generates, uses and can radiate radio frequency energy and, if not installed and used in accordance with the instructions, may cause harmful interference to radio communications.

However, there is no guarantee that interference will not occur in a particular installation. If this equipment does cause harmful interference to radio or television reception, which can be determined by turning the equipment off and on, the user is encouraged to try to correct the interference by one or more of the following measures:

- Reorient or relocate the receiving antenna.
- Increase the separation between the equipment and receiver.
- Connect the equipment into an outlet on a circuit different from that to which the receiver is connected.
- Consult the dealer or an experienced radio/TV technician for help.

Battery Safety Tips:

1. Please keep the battery out of the reach of children. Swallowing it can cause severe injury within 2 hours,including chemical burns or death. If ingested, seek medical attention immediately.
2. If the battery is misused or damaged,flammable liquid may leak from it. You should avoid contact with this liquid. If accidental contact occurs,rinse with contact with the eyes,seek medical attention immediately.The liquid emitted from the battery can cause irritation or burns.
3. Do not expose the device or battery to excessive temperatures.
4. Be aware of the risk of short-circuiting the terminals of battery-powered devices or batteries with metallic objects.
5. Do not use modified or damaged batteries.
6. Non-rechargeable batteries should not be charged.
7. Do not mix different types of batteries or new and old batteries.
8. Batteries should be inserted with the correct polarities.
9. Depleted batteries must be removed from the device and disposed of safely.
10. If the device is to be stored for a long period without use, batteries should be removed.
11. Battery: AAA 1.5V

DIMENSIONS

- First, check the room size, and then ensure there is at least 30 inches (76 centimeters) of clearance or space between the fan and any walls or other obstacles that the fan blades might hit to optimize airflow. After installation,please verify blades are at least 7.5 feet (2.3 meters) above the ground.

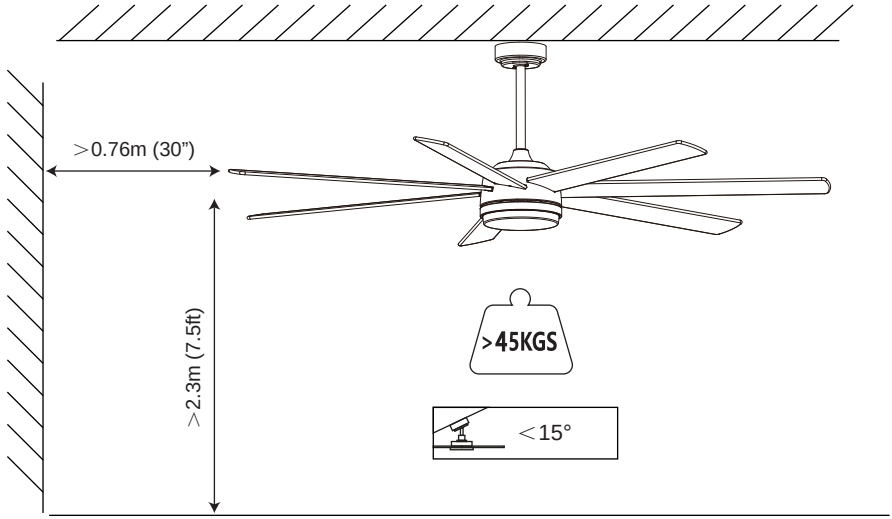

TOOLS REQUIRED



Step ladder



pliers



Phillips screwdriver

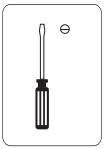

Flat blade screwdriver



Electrical tape



tape measure

PACKAGE LIST

Unpack your fan and check the contents. You should have the following:

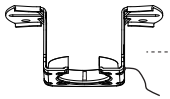
1. Bracket

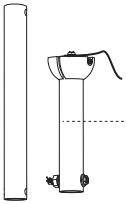
2. Downrod

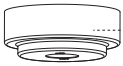
3. Canopy

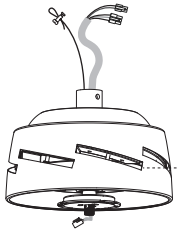
4. Body/motor


5. Coupling cover


6. Light kit


7. Light cover

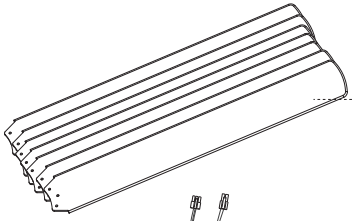
8. Blades


9. Spare power cable


10. Spare safety rope

Remote control unit

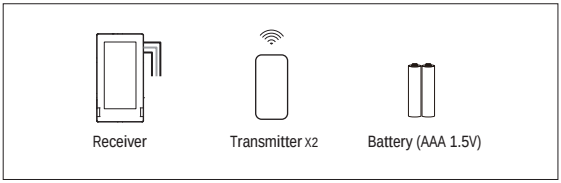

Blade balance kit

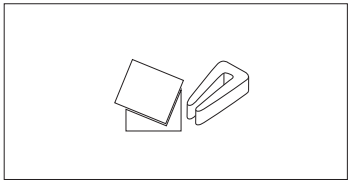

Hardware bag

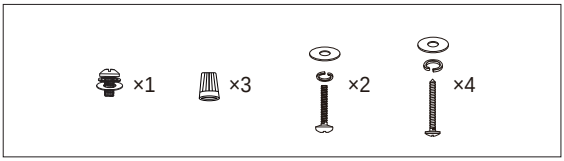

Instruction manual

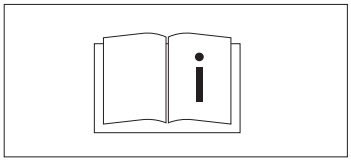

- Note: The illustrations in this manual are for explanatory purposes only and may not correspond to actual units.

CHOOSING THE RIGHT LOCATION

- If installing on a ceiling outlet box, check its suitability first. Most outlet boxes intended for lighting are not suitable for fans and may need replacing.
  Consult a licensed electrician if unsure.

Check the outlet box:

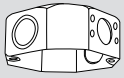

You must be able to secure the fan to building structure or fan-rated outlet box.

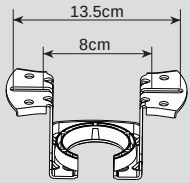

- The bracket provided is suitable for outlet boxes with sizes from 8-13.5cm

HANGING BRACKET INSTALLATION

- Before starting any work, make sure that the power to the main power cabinet is safely turned off. This can be done by either removing the fuse or switching off the circuit breaker.





- Make sure that ceiling joists are strong enough and of adequate size to support the weight of the fan of about 45 kg.
- Use different screws to fix the bracket according to the ceiling material.
  Can be installed on <15º sloped roof.

① remove two screws from the bracket (without fully removing them).

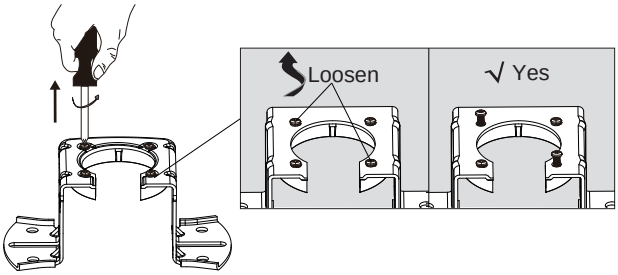

② Use different screws to secure the bracket according to the ceiling material.

Outbox

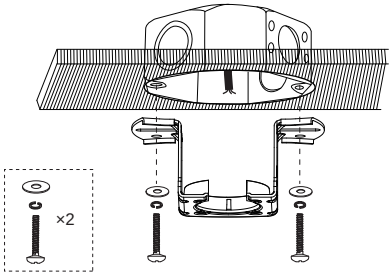

OR

Solid Wall Ceiling

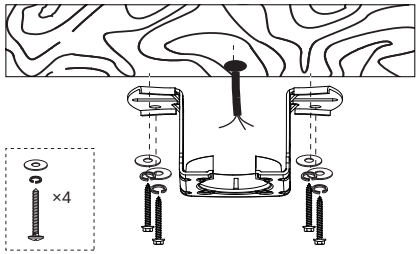

Check whether bracket is securely installed or not.

ASSEMBLE THE FAN

① Detach the downrod assembly.

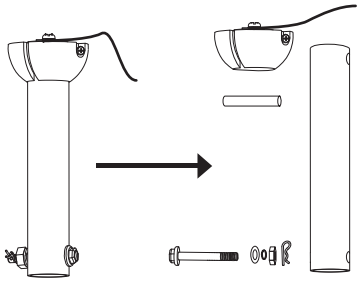

② Remove the pre-installed screws from the motor assembly.

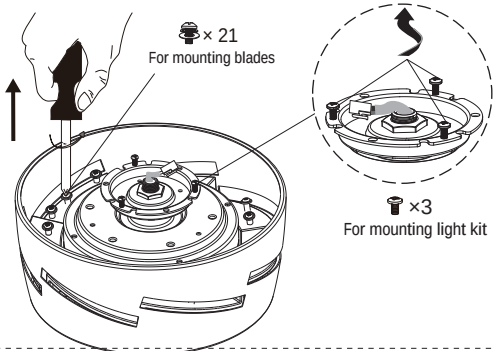

NOTE: IF YOU ARE GOING TO USE A LONG DOWNROD, FOLLOW THESE STEPS.

1.Connecting the Spare Power Cable

2.Connecting the Spare Safety rope

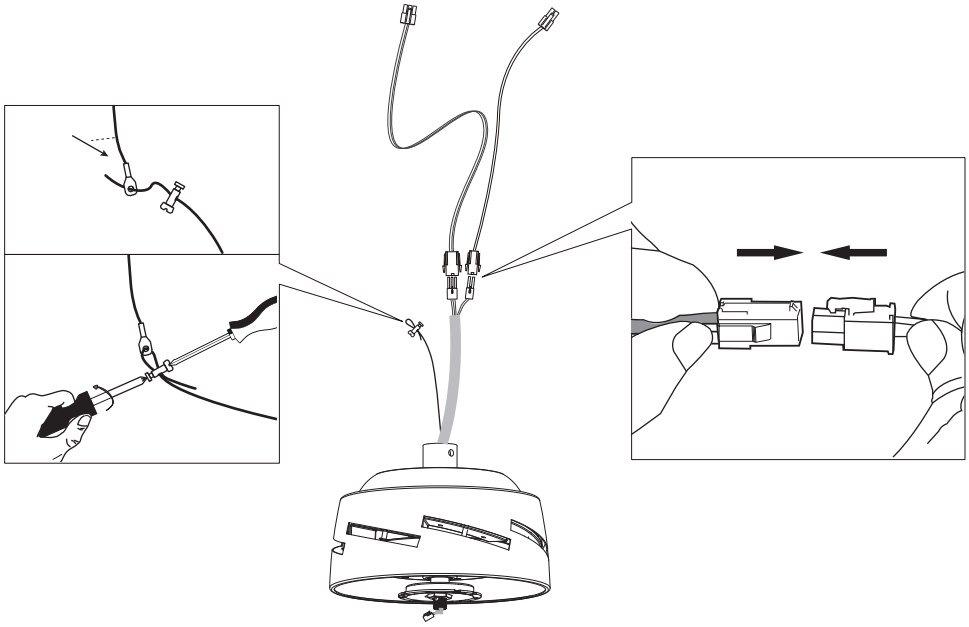

② Route all the wires from the motor the downrod through. Secure the downrod to the coupling with bolt, washer, nut, tighten the nut, and tighten the mfirmly, then insert the R pin. Last tighten the two screws on the coupling.

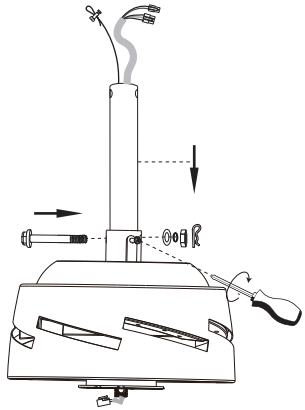

③ Insert the coupling cover, canopy, and the hanger ball onto the downrod in the correct order. Insert the cross pin into the holes at the top of the downrod to ensure it is properly installed in the slot. Then, align the holes and tighten the two screws.

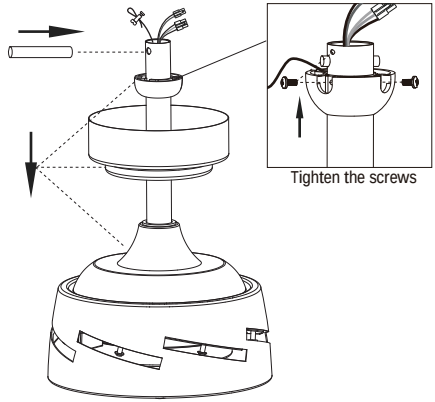

④ Lift motor assembly onto mounting bracket. Install the ball joint onto the mounting bracket opening. Rotate fan until notch on downrod ball engages the ridge on the mounting bracket.

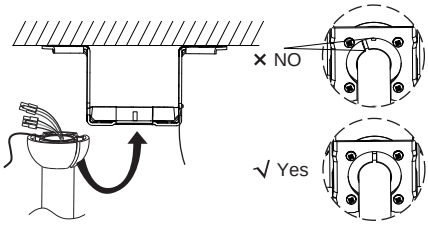

⑤ Safety rope installation method.

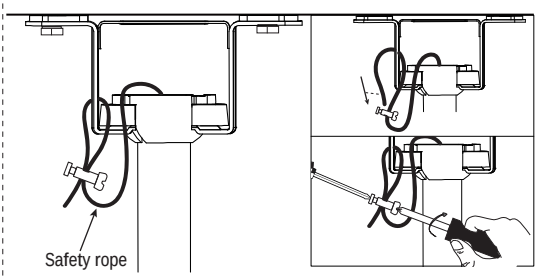

WIRING

① Wire in accordance with the wiring diagram.

If you are not familiar with wiring or have any doubts, please consult an electrician.

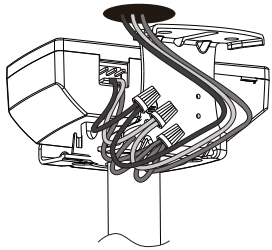

WIRING DIAGRAMS

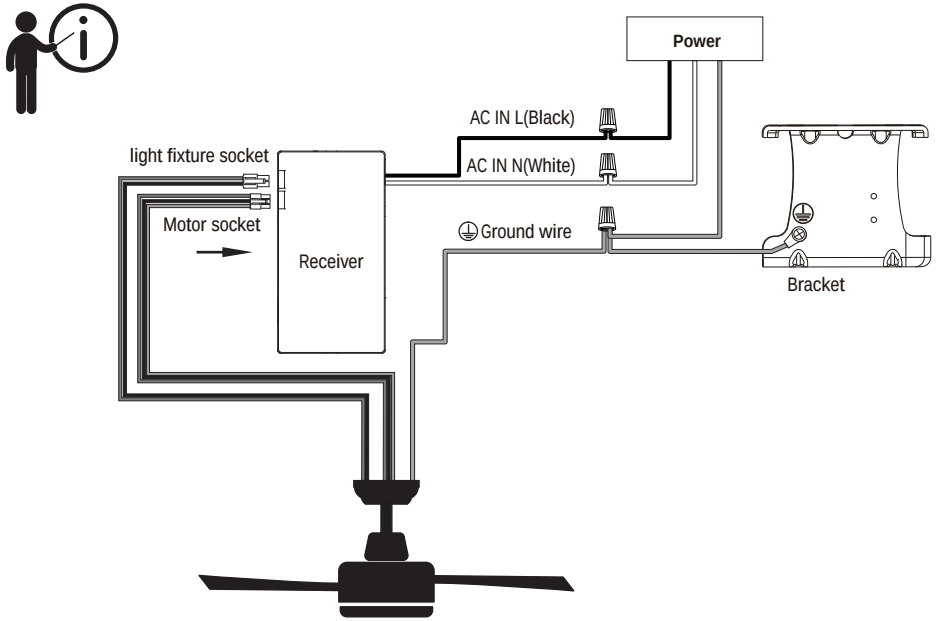

② Put the receiver into the Bracket and arrange the wires

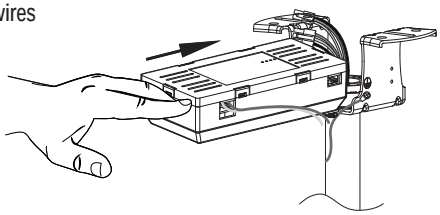

INSTALL REMAINING PARTS

① Rotate the canopy clockwise until screw heads engage the key slots fully. Tighten the screws. Be careful not to damage or cut the wiring.

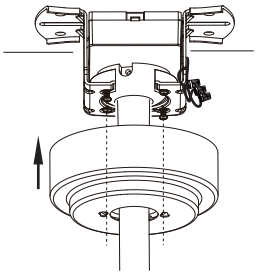

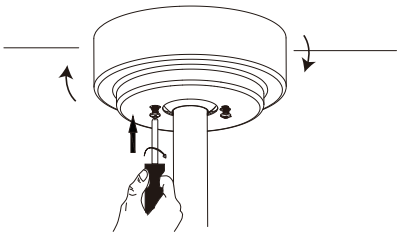

② Align the holes on the blade with the corresponding ones on the motor assembly. Then, use the blade screws to secure the blades in place and tighten them. Repeat this step until all blades are installed.

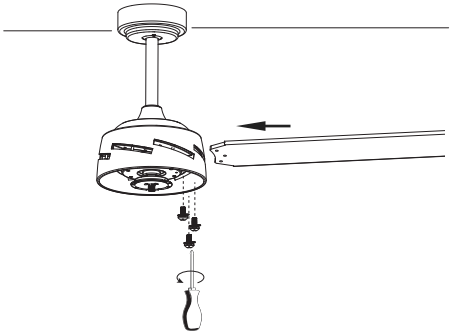

③ Align the holes on the light kit with the corresponding holes on the motor assembly, then connect the wiring terminals. Use the three screws you removed to install the light fixture onto the motor assembly.

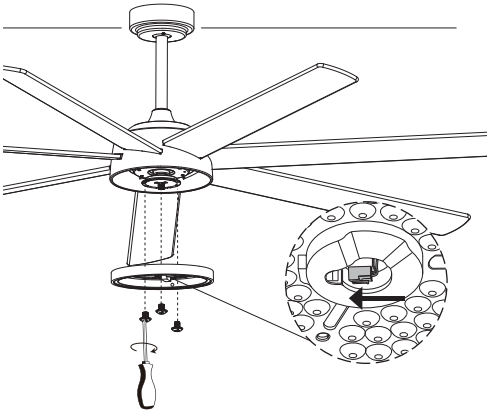

④ Align the locking points on the lampshade with the slots on the light kit. Rotate the lampshade until it is securely fixed in place.

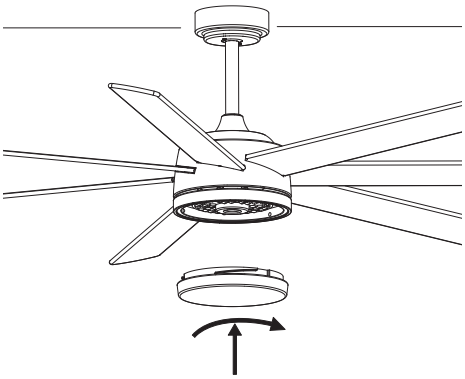

SWITCH ON AND CEILING FAN WORKS

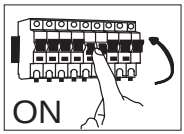

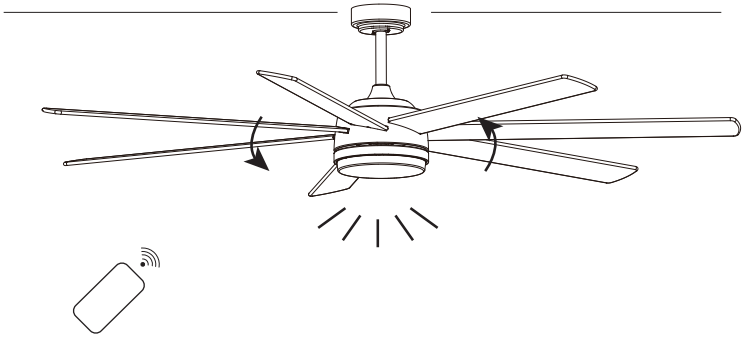

REMOTE CONTROL OPERATION

Button Function-1

1 - 6	Fan speed control.
	Stop the fan.
	LED On/Off , Colour Change.
	Forward/Reverse.
—	Light brightness “-”.
+	Light brightness “+”.
1H 3H 6H	Preset timer for fan to stop automally. E.g. if timer set at 1h and then 3h, fan will stop at 3h. Setting default to last press. To engage time this has to be last button pressed after selecting speed, pushing any other button after selecting timer will cancel it.

Remote control pairing

- Note: Your remote control has been factory pre-set, so no pairing is required for first-time use. Re-pairing is only necessary if the remote control malfunctions.

1. Install 2 batteries(AAA 1.5V) into the remote controller.
2. Turn on the power. Within 10 seconds of powering on the fan, press and hold the "1" and "2" buttons for about 3 seconds. After a beeping sound , pairing is complete, and the fan is ready for use.

About the light memory function : Automatically remembers the brightness and color temperature of the light.

REMOTE CONTROL OPERATION

Button Function-2

−	Fan Speed "-".
+	Fan Speed "+".
⏻	Stop the fan.
⇄	Forward/Reverse.
	LED On/Off.
	Light brightness "+".
	Light brightness "-".
	Sleep Wind.
CCT	Change color temperature.
1H 3H 6H	Preset timer for fan to stop automally. E.g. if timer set at 1h and then 3h, fan will stop at 3h. Setting default to last press. To engage time this has to be last button pressed after selecting speed, pushing any other button after selecting timer will cancel it.

Remote control pairing

- Note: Your remote control has been factory pre-set, so no pairing is required for first-time use. Re-pairing is only necessary if the remote control malfunctions.

1.Install 2 batteries(AAA 1.5V) into the remote controller.
2.Turn on the power supply to the fan. Within 5 sec, press and hold the " − " and " ☀ " button for about 3 sec. Once the receiver has detected the frequency, receiver will "Beep Beep" twice.Programming process is completed and fan is ready to use.

About the light memory function : Automatically remembers the brightness and color temperature of the light.

TROUBLESHOOTING

WARNING: Before attempting any repairs, ensure that the power cabinet is turned off

Problem	Troubleshooting
The fan will not start.	□ Check the main and branch fuses or circuit breakers.
	□ Check the wire connections to the fan.
	□ Make sure the remote control has been paired.
The fan sounds noisy.	□ MMake sure all motor housings are secured and tightened.
	□ Make sure the screws that attach the fan blade to the motor hub are tight.
	□ Check for any friction between the fan blades and the motor housing.
	□ Allow a 24-hour "break-in" period. Most noises related to the new fan will disappear during this time.
	□ Check if there is any friction between the light or the base cover and the blades.
	□ Ensure the distance between the canopy and ceiling is minimal, and it should not touch the ceiling.
	□ Check if the outlet box is securely installed and if rubber washers are used between the bracket andthe outlet box.
The fan is rotating, but the airflow is insufficient.	□ The fan may be operating in reverse, causing air to flow upwards. □ The fan may be too small compared with the size of the room. □ Obstacles in the room may be blocking airflow.

Remote Control Fault Alert Tones Explanation			
No.	Buzzer Alert Tone	Problems	Troubleshooting
1	Two short, quick sounds, repeated 6times with a l-second interval betweeneach repetition. A continuous alert sound, ringing 5 times in each instance.	motor phase failure	1. Check whether the motor terminal and the controller are properly connected or if the connection is loose. 2. Check if any of the three wires in the motor terminal are loose.If neither of the above issues is present, the controller needs to be replaced. If replacing the controller does not solve the problem, the fan motor itself needs to be replaced.
2	Three short, quick sounds,repeated 4 times with a 1-second interval between each repetition. A continuous alert sound, ringing 6 times in each instance.	Motor stall	1.When the motor engine stops, move the blade to rotate it so as to predict the motor is tight or jammed. If the blades rotate and the motor continues to rotate with inertia without any abnormal noise after releasing them, it indicates that the motor and structural components are properly installed. In this case, the controller needs may need to be replaced. 2.If the fan blades are too tight, try manually rotating the them for 5 revolutions .Then restart the fan, setting the speed to the maximum. If it operates normally after this, keep the fan running at maximum speed for 10 minutes. If any issues persist, the controller needs to be replaced. 3.If the blades cannot be moved at all, check whether any incorrect screws or deformed structural parts are causing the fixed components to jam with the rotating parts. If not, the fan motor needs to be replaced.

Addressing Fan Wobbling Issues During Operation

If the fan body wobbles during Operation, this is not an indication of a fault (even if it wobbles a few centimeters). To reduce it,you can tum off the fan andthen:

1. Check if all the blades are properly secured by tightening the screws.

2. Check the distance between each blade and the ceiling. Measure the distance to the celing as shown in the image.If there is a change and you have already tightened the screws, ensure that all blades are the same shape. If any blade appears noticeably different, it could cause wobbling during operation. If you've completed these steps and the wobbling still persists, use the provided balancing kit for dynamic balancing, as follows.

(1) Turn the fan on to its highest speed to maximize the wobble.

(2) Turn off the fan. Select one blade and place a clip on it (see image 2), clipping it to the edge of the blade.

(3) Turn the fan on and set it to the highest speed, checking whether the wobble improves or worsens. If there is no improvement, move the clip to another blade. Repeat this process to determine which blade can reduce the wobble.

(4) Once the blade is determined, leave the clip on it and adjust the clip forward or backward on this blade until the best position is found that provides the most effective result.

(5) Finally, remove the clip and place one of the balance weights on the upper centerline of the blade where the clip was located.

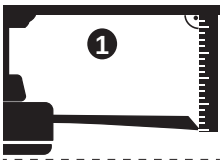

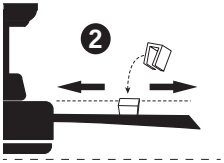

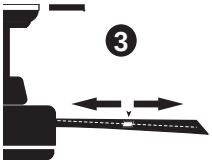

Ceiling Fan

Questions, problems, missing parts? Before returning to the store,
visit www.pmwfan.com for further assistance.
Retain this manual for future use.

Manufacturer: Zhongshan Miaowang Electrical Appliance Co., Ltd.
Address: Building C, No.10, Qingfu Road, Henglan Town, Zhongshan City, Guangdong Province,CN
Website: www.pmwfan.com
Tech Support Telephone: +12092272409
Tech Support Email Address: support@pmwfan.com