INSTALLATION
Product Manual

Version: 210284US-01-26A-AA

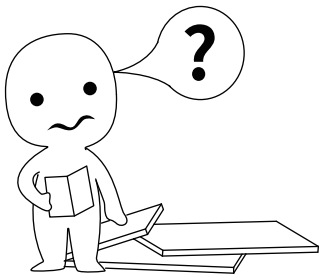

IMPORTANT INFORMATION!

please read the entire manual before starting to assemble and/or using this product.follow the manual thoroughly and keep it for further reference.

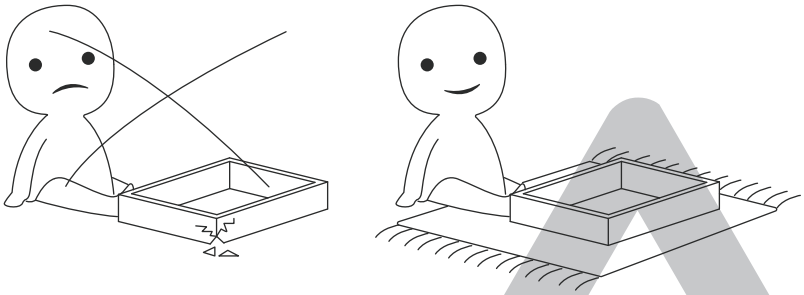

AVOID SCRATCHES!

In order to avoid scratching this furnuture should be assembled on a soft layer-could be a rug.

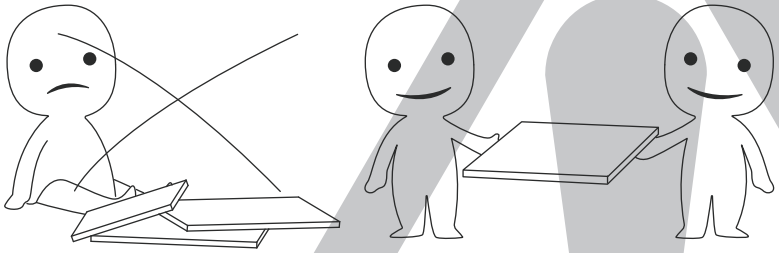

IMPROVE EFFICIENCY !

Try to find a partner to install with you, which can speed up the installation efficiency and shorten the time.

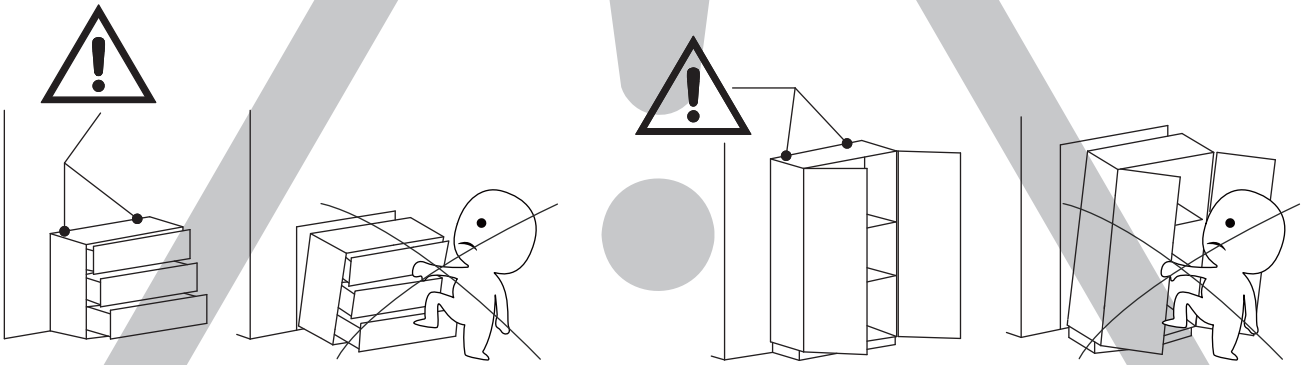

ANTI-TOPPLE WARNING !

Overturned furniture can cause serious or fatal crush injuries. To prevent tipping over, be sure to use the wall attachment, if not included with this product. Please purchase the wall attachment that fit your wall. If unsure, seek professional advice. Please read and follow each step of the instructions carefully.

IMPORTANT !

It is important that any product which is assembled using any kind of screw is re-tightened 2 weeks after assembly,and once every 3 months - in order to assure stability through-out the lifespan of the product.

For regular maintenance and cleaning of the product, for the frame, please use a rag dipped in neutral detergent to fully wipe it, and then dry it with a clean rag.For glass materials, wipe with a rag dampened with water glass cleaner, and then dry with a dry rag.

Do not use an electric screwdriver, and do not use too much force when installing, because the board is easy to break.

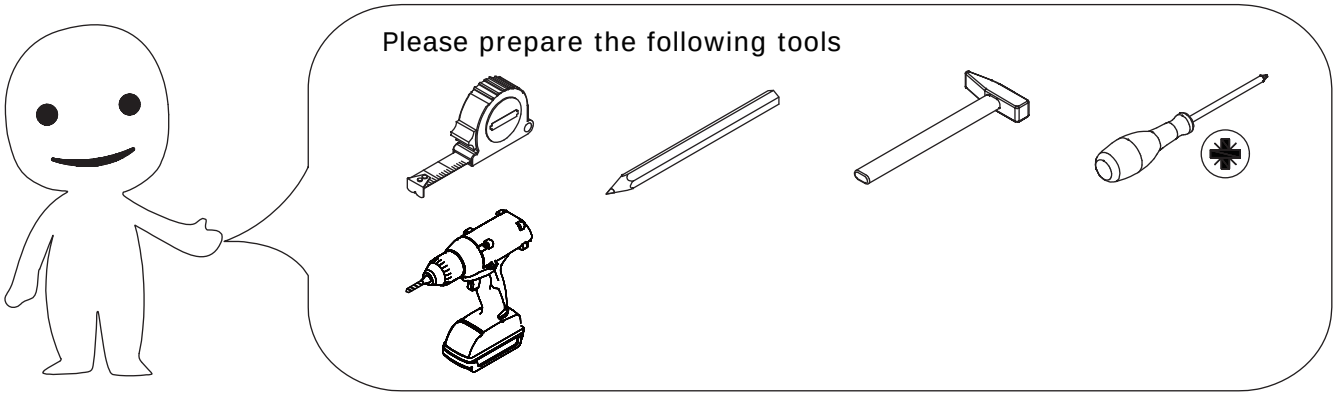

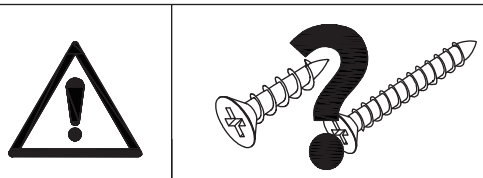

When installing, please carefully confirm whether each screw corresponds to the manual, accessories with similar shapes can be distinguished by size

A x 4	B x 4	C x 12	D x 14	E x 12
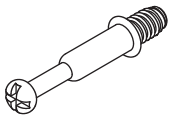		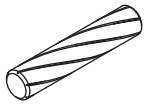	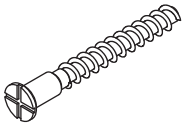	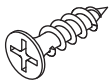
CRA0635B	CRB1595A	CRF0830A	CRC0540A	CRD3514A

F x 4	G x 82	H x 14	J x 14	K x 4
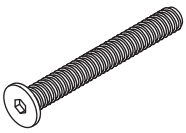		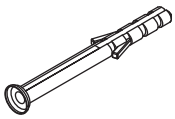	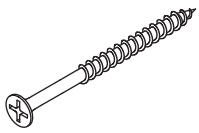	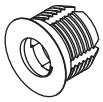
CRG0660A	CRG0612A		CRD0580A	

L x 4	M x 32	N x 4	P x 24	Q x 16
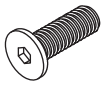	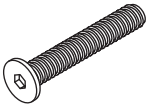	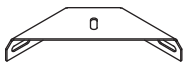	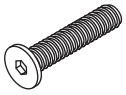	
CRG0616A	CRG0645A		CRG0635A	

R x 2	S x 2	T x 4	U x 2	V x 4
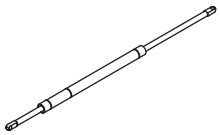			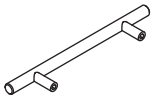	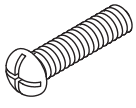
				CRE0422A

W x 2	X x 2	Y x 2	Z x 2	AA x 4
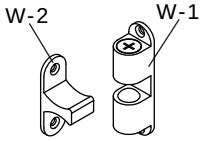	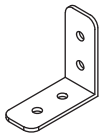	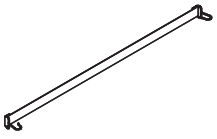	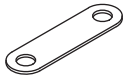	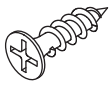
				CRD0314A

AB x 24	AC x 1	AD x 1	AE x 1	AF x 1
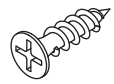 CRD0416A	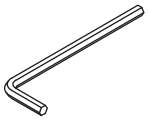 M4	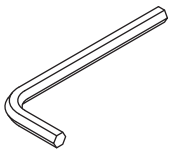 M12	 M6	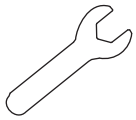 M8

AG x 14	AH x 14
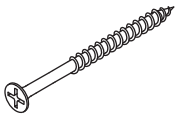 CRD0468A	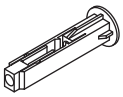

Important information to read before starting the assembly. Keep this information for future reference.



IMPORTANT WARNINGS

Risk of serious injuries if the wall bed tips over.
To prevent wall bed from tipping over, mount it permanently to the wall.
Only a qualified person* must carry out the installation and any possible adjustment of the wall bed (including disassembly). If the wall bed is not firmly mounted (anchored) to the wall, it might tip over and cause serious injuries to the installer, users of the bed as well as the people near the bed.
The choice of wall anchoring depends on the type of wall. Use wall anchors suitable for the wall material.

*Qualified person: it is necessary to have a good understanding of the wall structure where the bed is anchored, including the positioning of the joists and structural components in the case of a wood or metal structure. If you do not have the necessary skills, make sure that the installation is done by a person who has the qualifications and required knowledge. When you choose the installer, make sure to comply with all applicable regulations in the province, state or country where the furniture is installed.

IMPORTANT: BEFORE STARTING ASSEMBLY

Be sure to confirm the following information:
1.The installer has the qualifications * and required knowledge.
2.Only wall anchor screws for wood-frame walls are provided with this bed. See anchor requirements and installation notes provided in the instruction manual, according to the type of wall, and use the appropriate anchors such as described in this manual.
3.Your bed can hold a maximum distributed weight of 800 lb (362 kg), including the weight of the mattress.
4.Maximum thickness of mattress: 10 in (25 cm), and must stand in vertical position without sagging.
5.The bed will not stay open without the weight of the mattress which must be between: 38 lbs (15 kg) and 90 lbs (41 kg).
6.Minimum ceiling height requirements for installation: 90 in (2.286 m).
7.It is recommended to assess the structural integrity of the floor and wall and to make sure that the wall anchoring devices can withstand the forces generated. More specifically, before installing the wall bed, it is necessary to verify that the floor and the wall on which you want to install the bed are flat and have no structural damage that could affect the installation of the wall bed or its anchoring to the wall. Do not install the bed on weakened or rotten structures.
8.It is necessary to ensure that wall anchors of the bed can withstand forces generated. The value of the holding power (Fh) of each anchor should be 630 Newtons (142 lbf).

If the wall bed is not installed properly, the latter might close unexpectedly or could open involuntarily.
In addition, if the wall bed is installed incorrectly, one of its structural components may break and fall off.

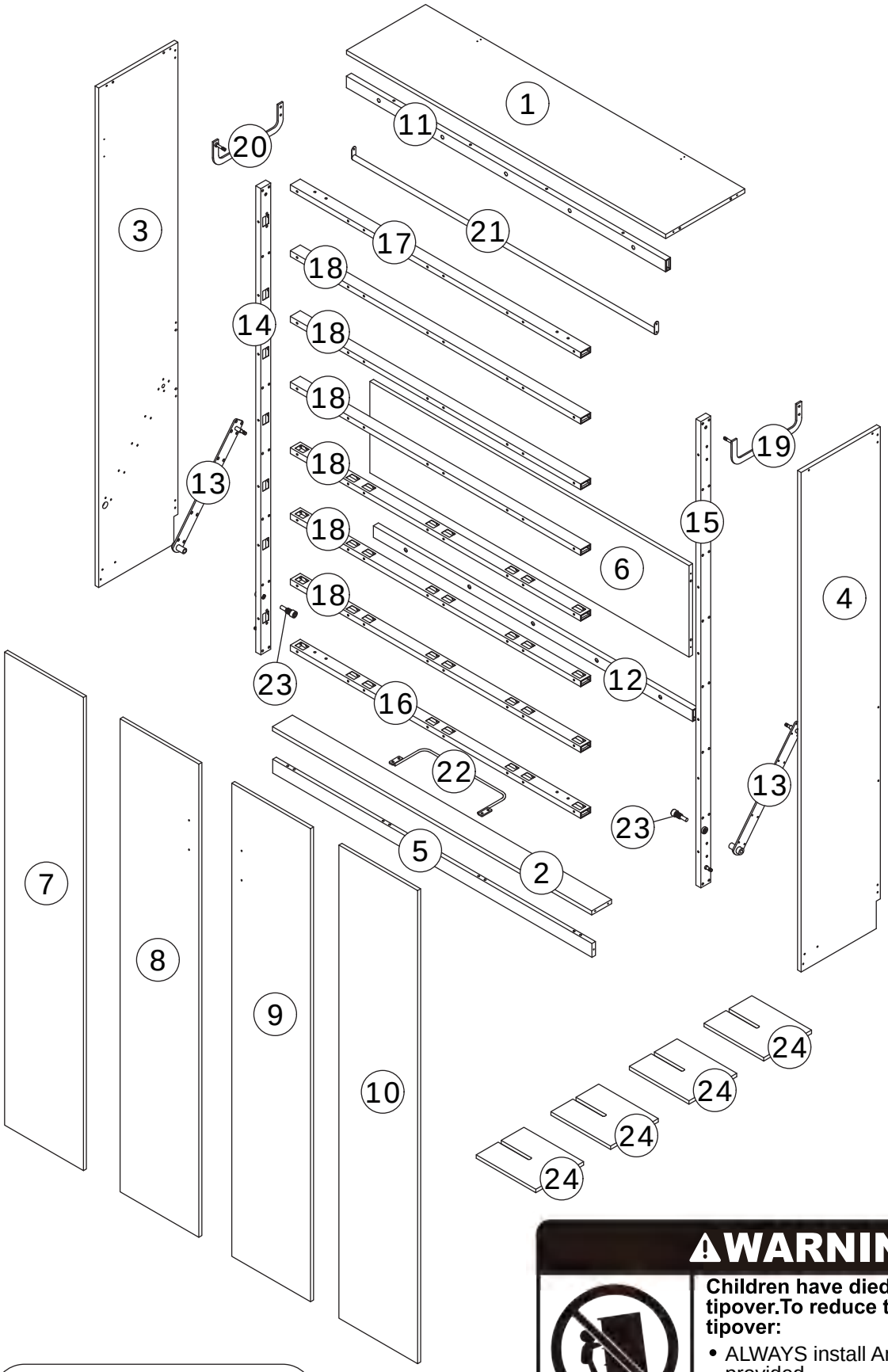

⚠WARNING



Children have died from furniture tipover.To reduce the risk of furniture tipover:

- ALWAYS install Anti-tip device provided.
- NEVER put a TV on this product.
- NEVER allow children to stand,climb or hang on drawers,doors,or shelves.
- NEVER open more than one drawer at a time.
- Place heaviest items in the lowest drawers.

This is a permanent label.
Do not remove!

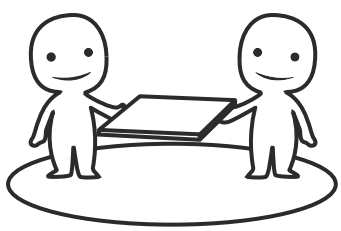

ASSEMBLED BY 2 ADULTS

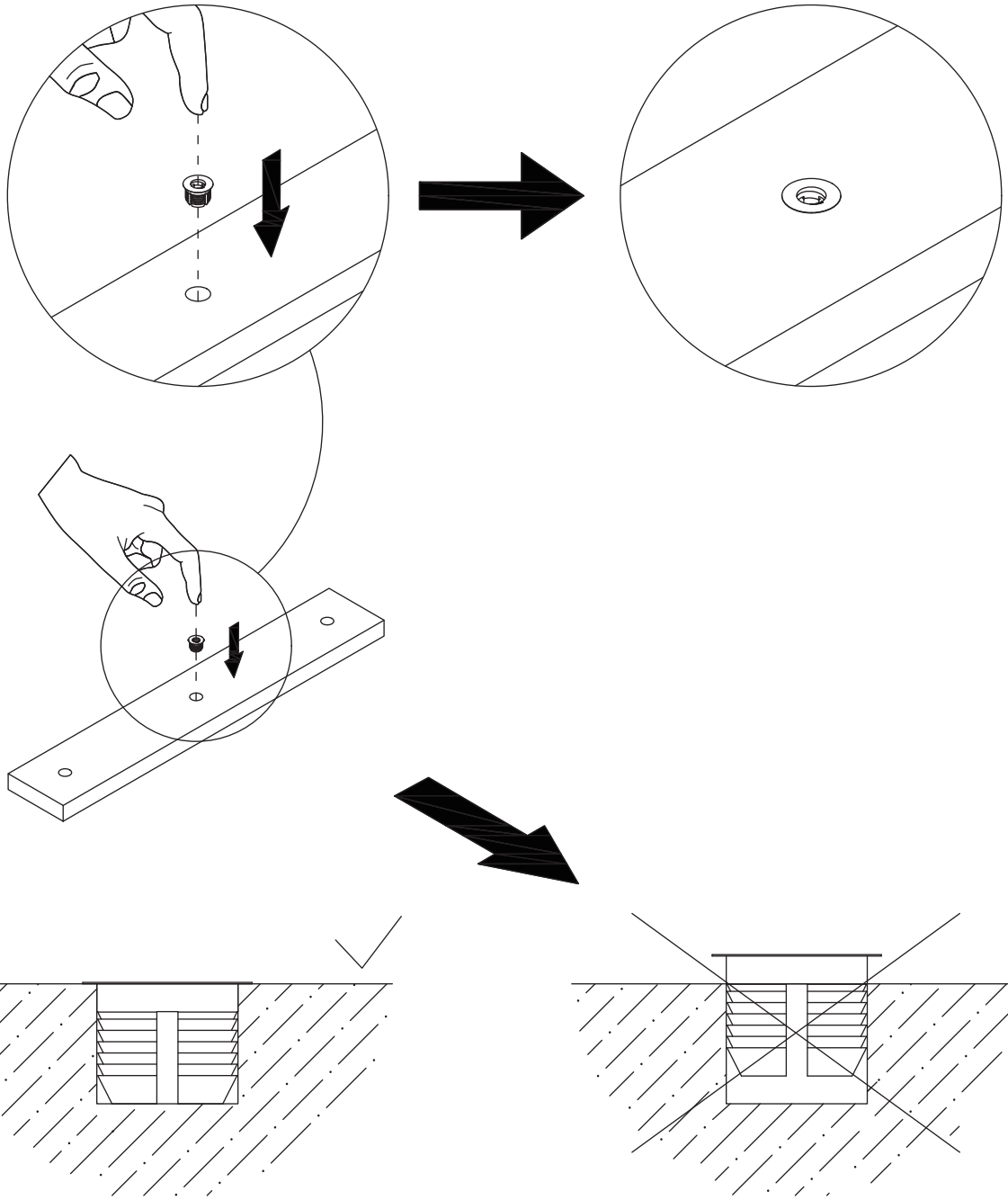

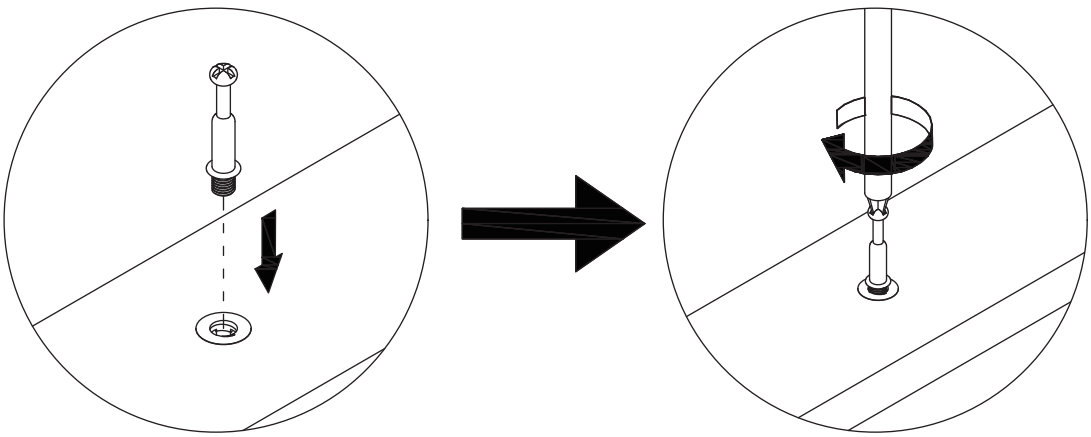

1

AB x 24

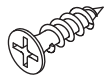

CRD0416A

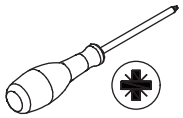



E



CRD3514A

AA



CRD0314A

AB



CRD0416A

Secure part (13) to panels 3 and 4 using screw (AB).

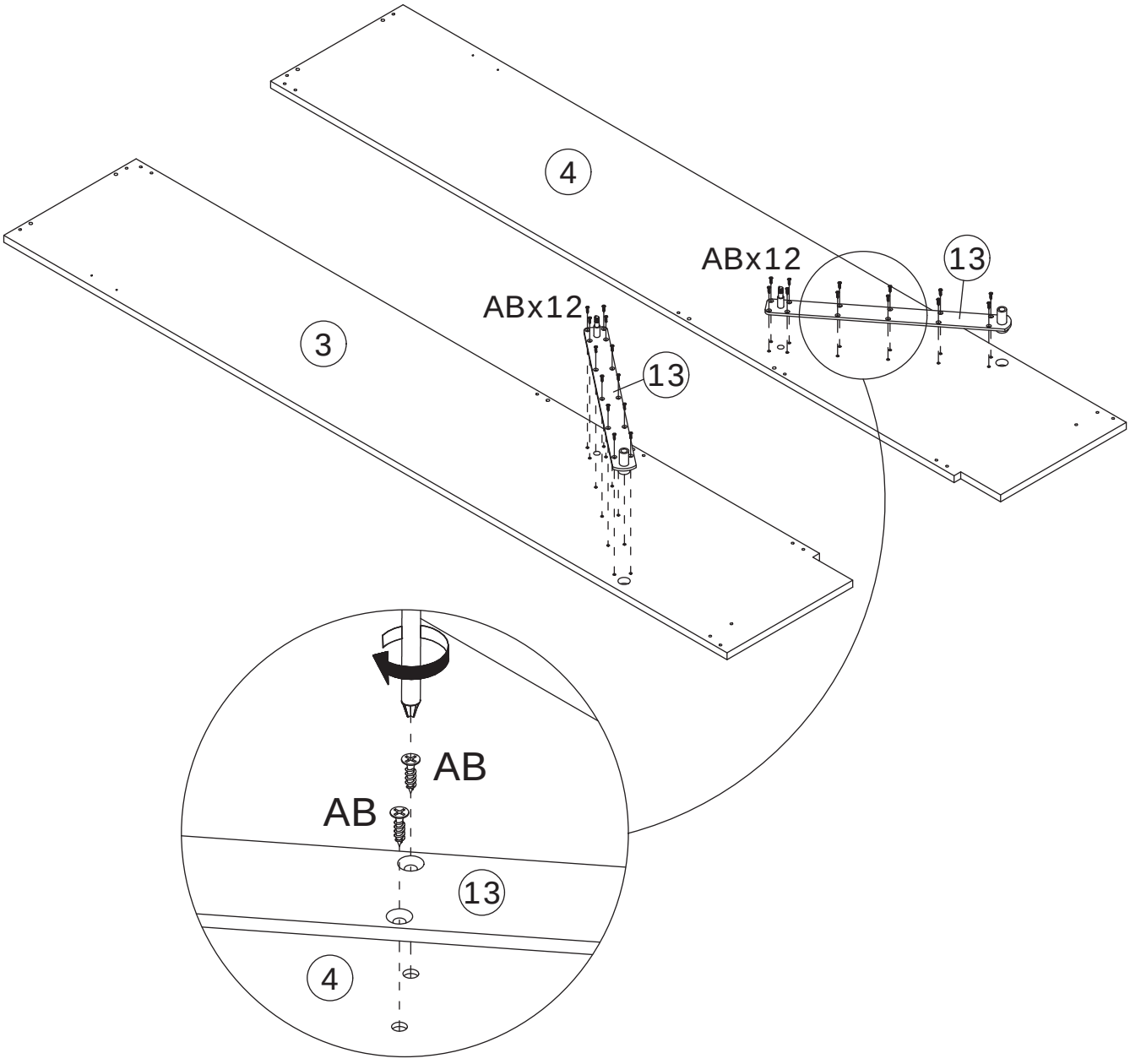

2

F x 4	AC x 1	
 CRG0660A	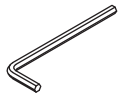 M4	

Secure part (11) to panel 1 using screw (F).

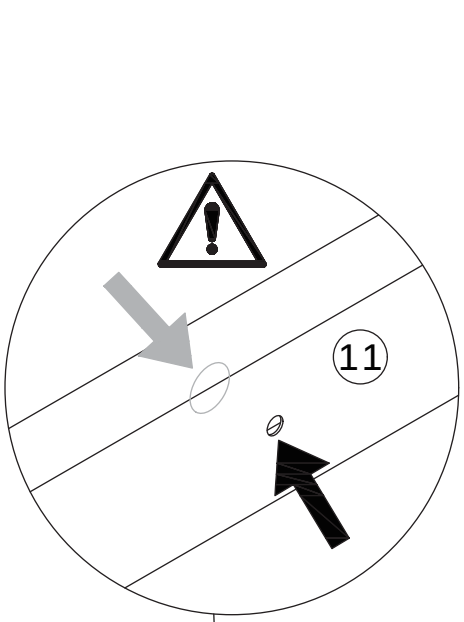

Pay attention to the front-to-back orientation of part (11). It can be distinguished based on the diameter of the through hole.

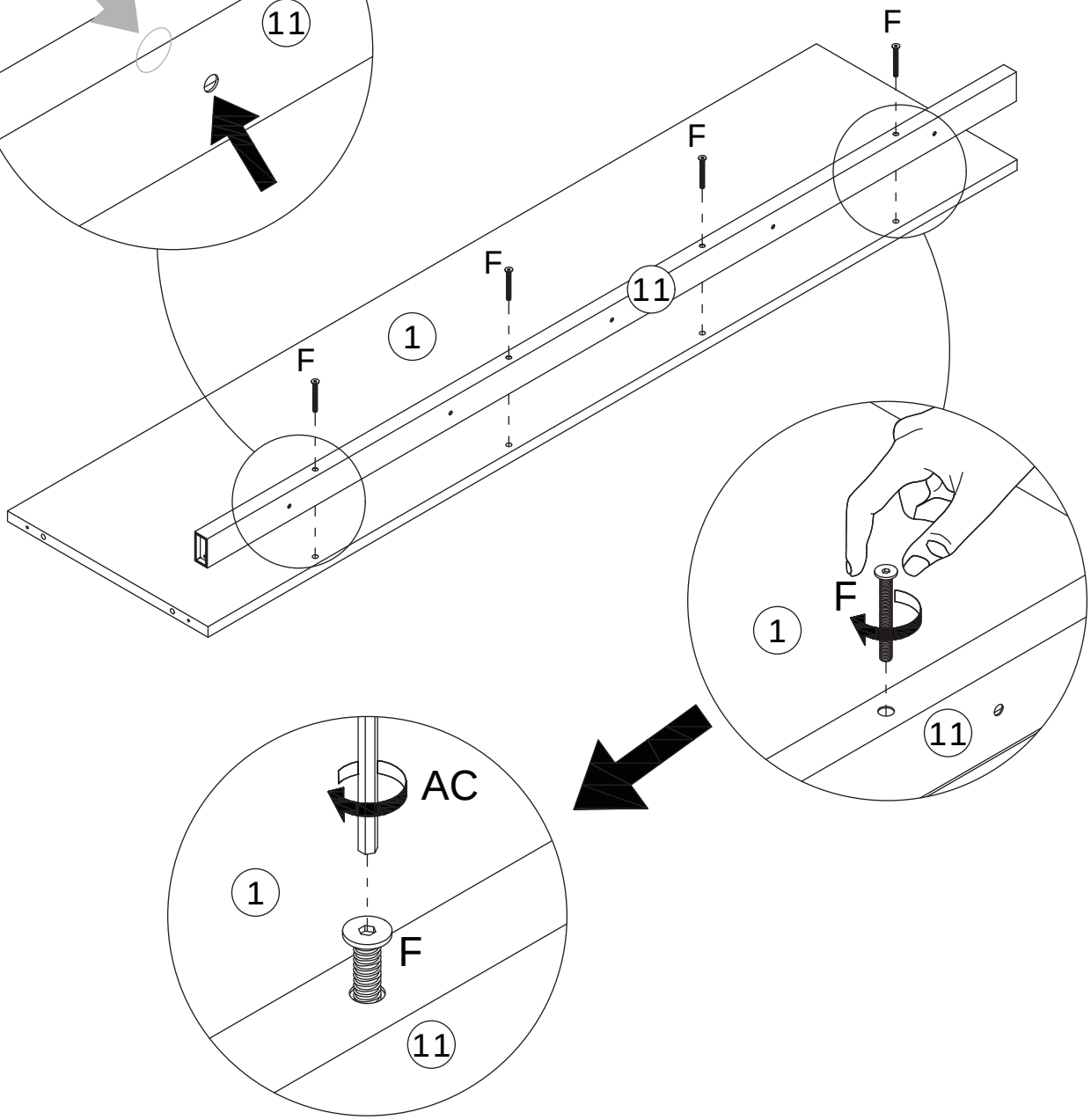

3

A x 4	K x 4	
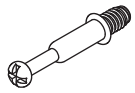 CRA0635B		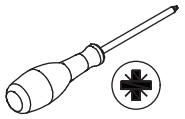

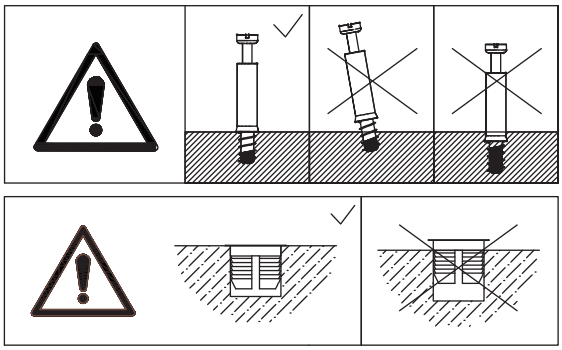

Insert plug (K) to panel 2, then screw self-tapping rod (A) onto panel 2.

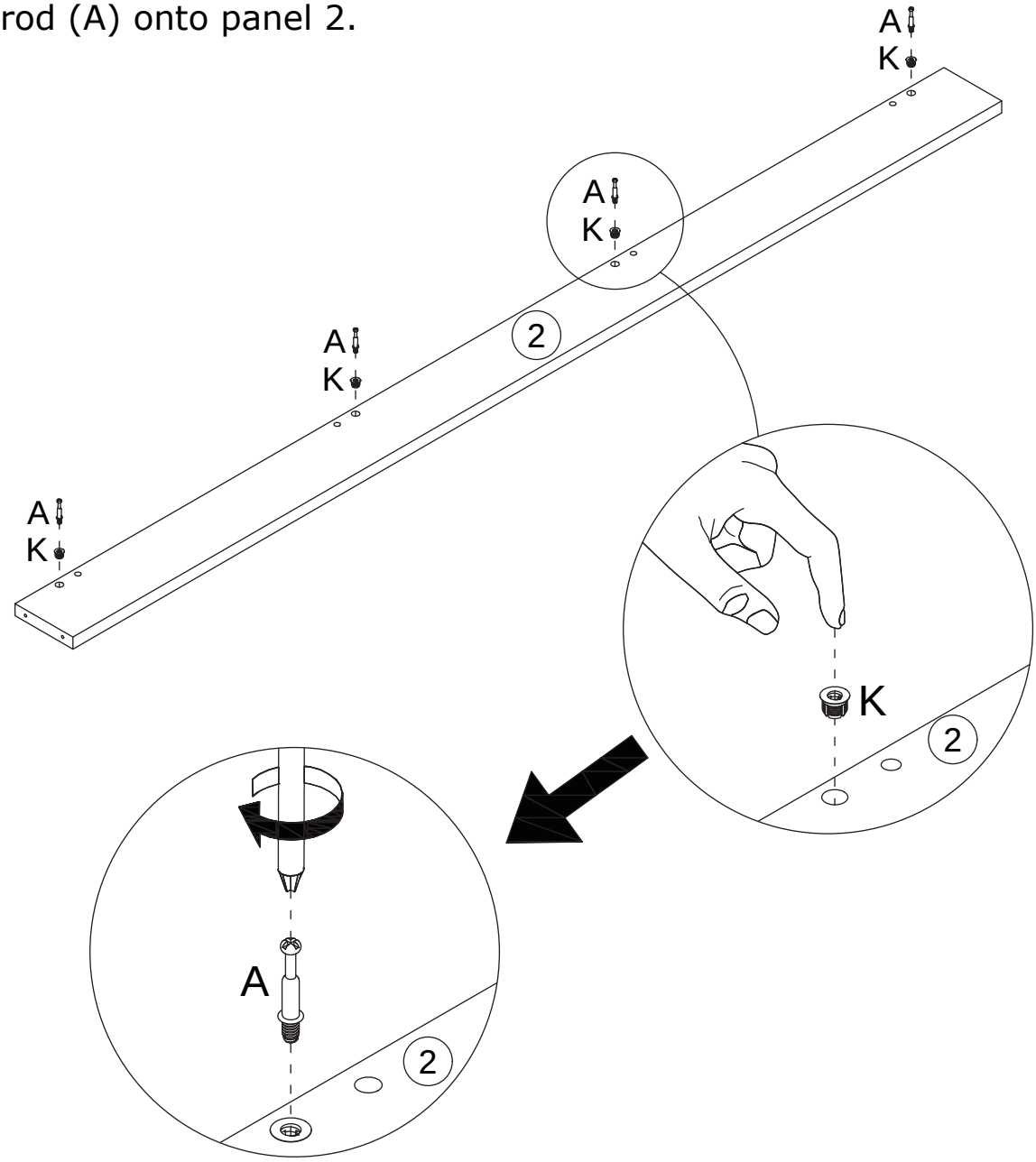

4

B x 4	C x 4	
 CRB1595A	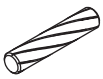 CRF0830A	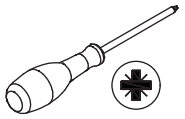

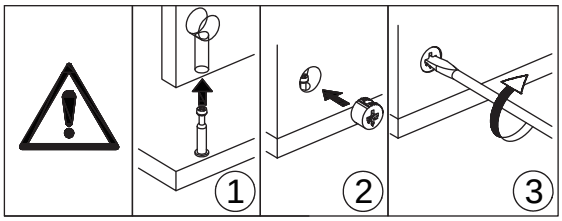

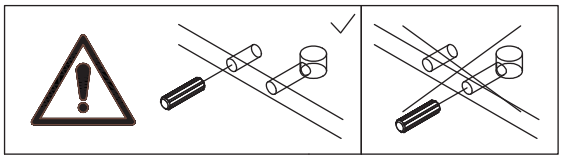

Connect panel 5 to panel 2 using wooden dowel (C), and tighten by turning eccentric wheel (B) clockwise.

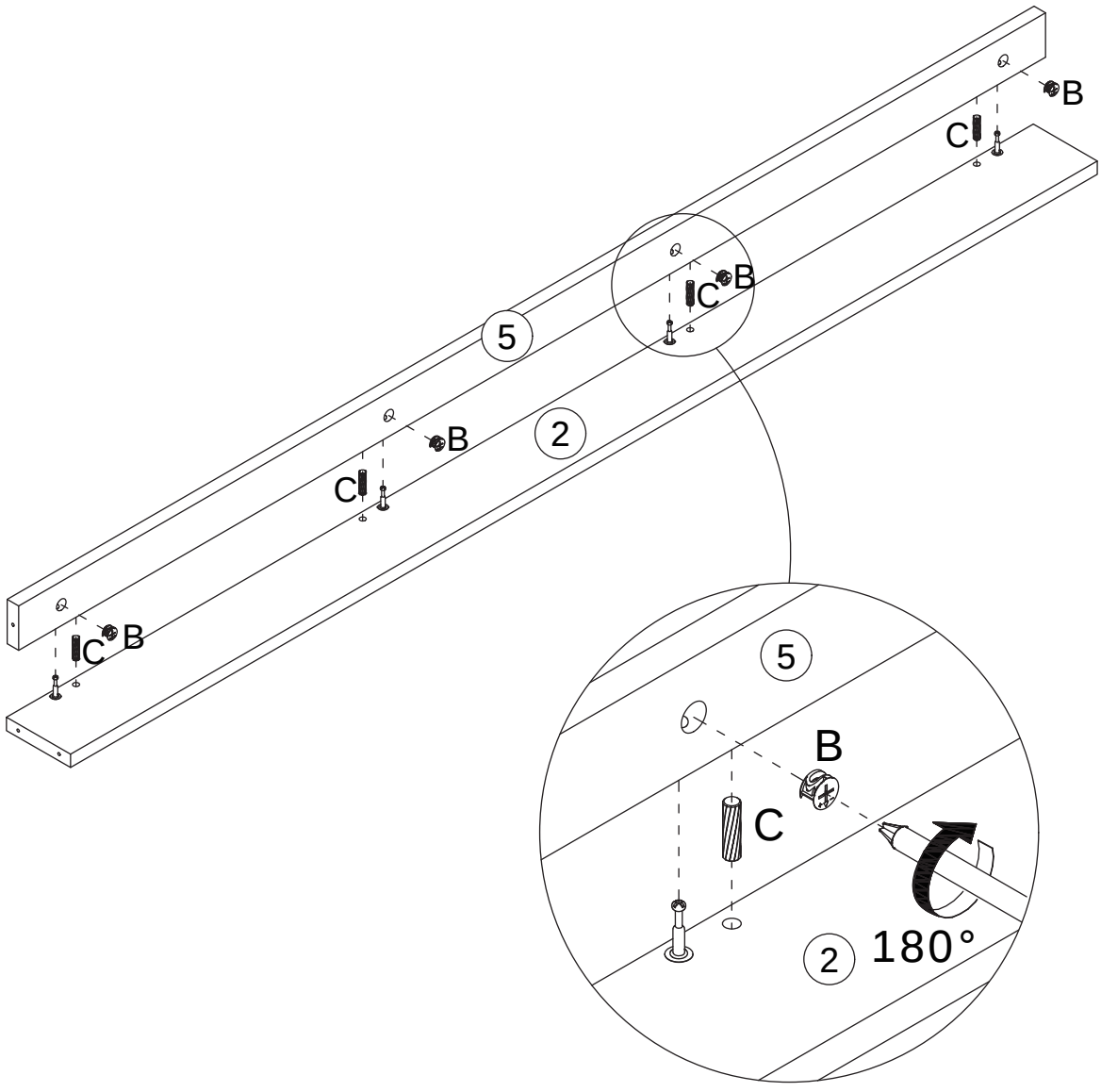

5

C x 4	D x 4	P x 4	AC x 1	
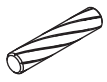	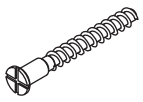		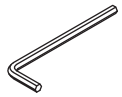	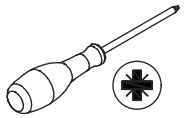
CRF0830A	CRC0540A	CRG0635A	M4	

Connect panels 1 and 6 to panel 3 using wooden dowel (C), and secure them with screw (D).
Secure parts (11) and (12) to panel 3 using screw (P).

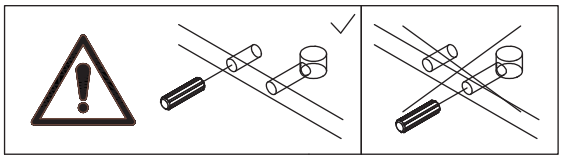

Pay attention to the front-to-back orientation of part (12). It can be distinguished based on the diameter of the through hole.

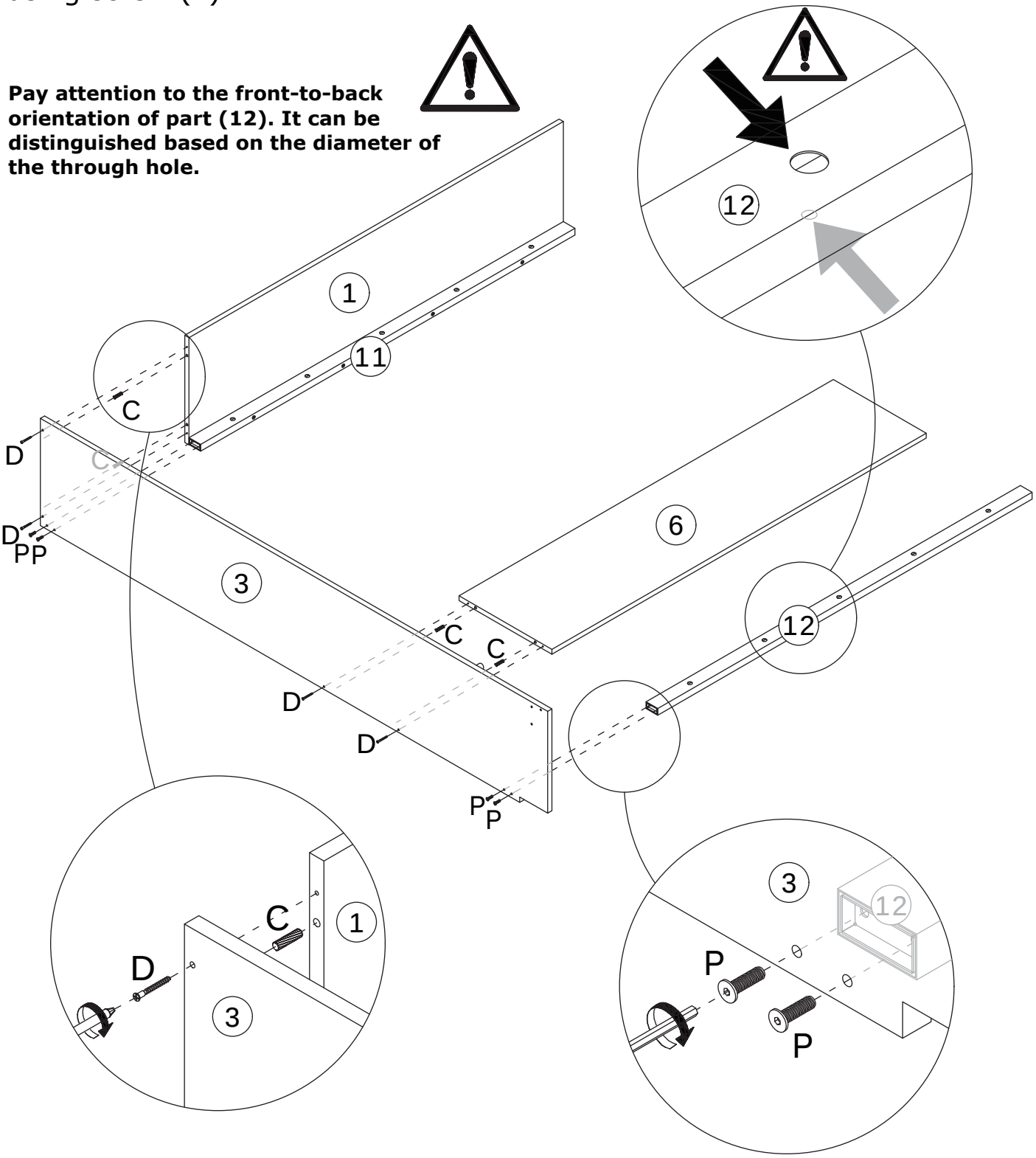

6

C x 4	D x 10	P x 4	AC x 1	
CRF0830A	CRC0540A	CRG0635A	M4	

Connect panels 1 and 6 to panel 4 using wooden dowel (C), and secure them with screw (D).
Secure parts (11) and (12) to panel 4 using screw (P).
Secure panel 5 to panels 3 and 4 using screw (D).

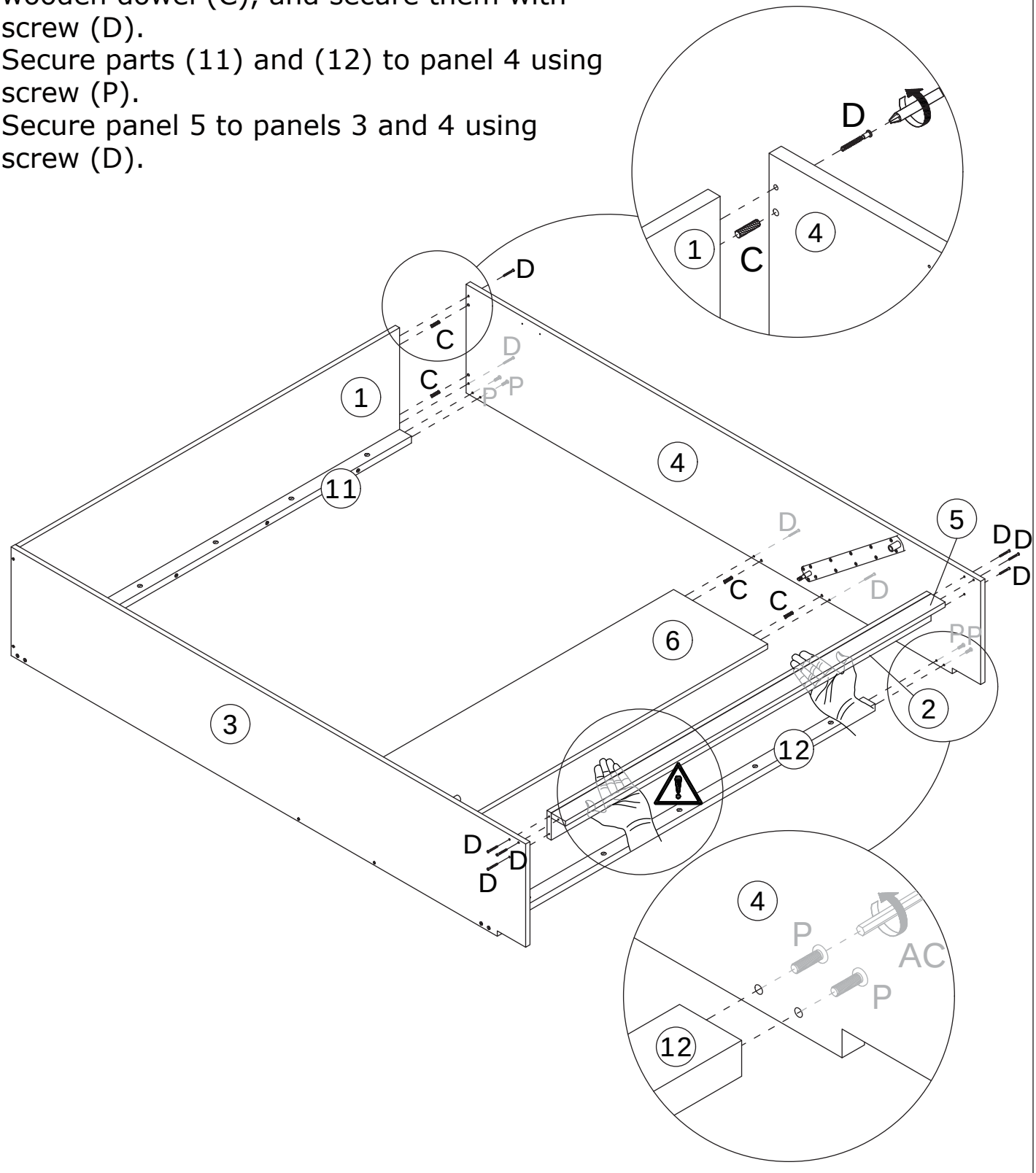

WALL ANCHORING REQUIREMENTS & INSTALLATION RECOMMENDATIONS

Important information to read before starting the assembly.
Keep this information for future reference.

IMPORTANT WARNINGS

Risk of serious injury if the wall bed overturns.
To prevent overturning, the wall bed must be permanently secured to the wall.
Installation, adjustment (including disassembly), and anchoring of the wall bed must be performed exclusively by a qualified professional*. Failure to securely anchor the wall bed to the wall may result overturning, posing a risk of serious injury to the installer, bed users, and nearby individuals.
The selection of appropriate wall anchors depends on the wall substrate. Use only anchors specifically rated

* Qualified person: it is necessary to have a good understanding of the wall structure where the bed is anchored, including the positioning of the wall studs and structural components in the case of a wood or metal structure. If you do not have the necessary skills, make sure that the wall anchoring is done by someone who has the qualifications and required knowledge. When you choose the installer, make sure to comply with all applicable regulations in the province, state or country where the furniture is installed.

IMPORTANT WARNINGS

INSTALLATION AND APPROPRIATE HARDWARE

Using appropriate hardware, all anchor screws for the wall bed must be securely fastened to wood or metal studs, structural framing members, or a masonry wall. Only anchor screws suitable for wood-frame walls are included with this bed.

NEVER USE DRYWALL ANCHORS OR ATTACH THE BED DIRECTLY TO DRYWALL.

Refer to the wall anchoring requirements and installation instructions provided in the user manual—specifically those corresponding to your wall type—and use only the approved anchors specified therein.

NUMBER OF SCREWS REQUIRED
ALL SCREWS MUST BE FIRMLY AND DEEPLY ANCHORED INTO THE WALL'S STRUCTURAL COMPONENTS.

** A CERTIFIED CONSTRUCTION PROFESSIONAL, IN COMPLIANCE WITH APPLICABLE REGULATIONS IN THE PROVINCE, STATE OR COUNTRY WHERE THE FURNITURE IS INSTALLED.

If there is a keel inside the wall, please select Option A
If there is no keel inside the wall, please select Option B.

Option A

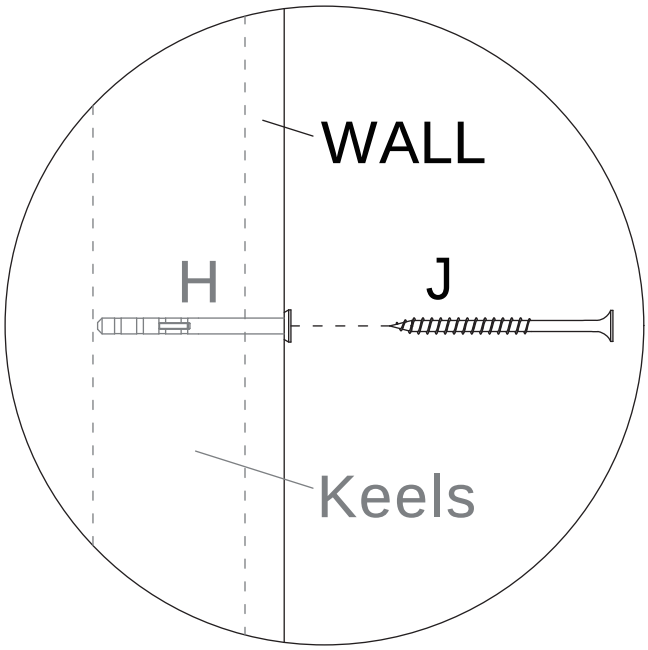

Option B

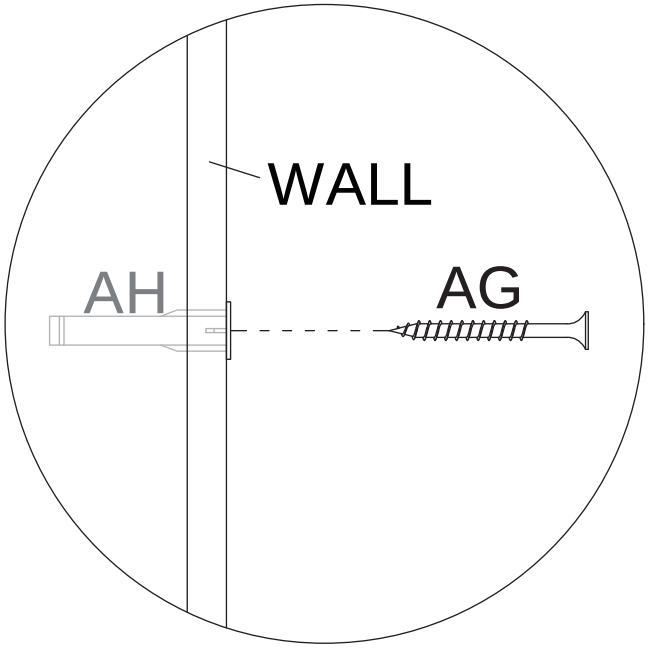

7

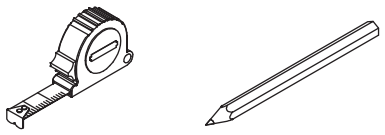

Option A

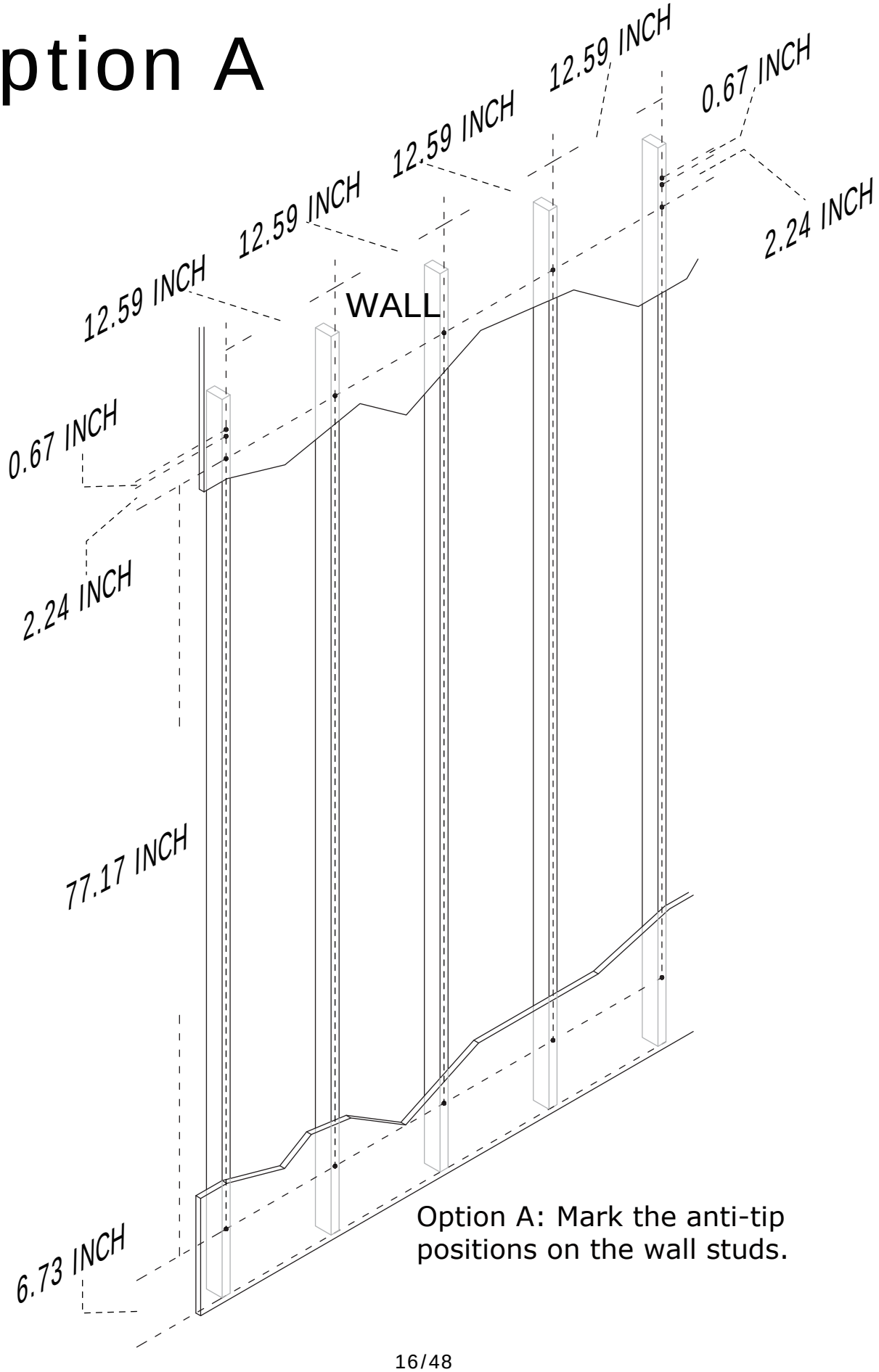

Option A: Mark the anti-tip positions on the wall studs.

8

H x 14

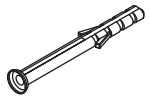



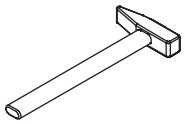

Option A

Option A: Install expansion screw (H) into the wall studs according to the anti-tip positioning specified in Step 7.

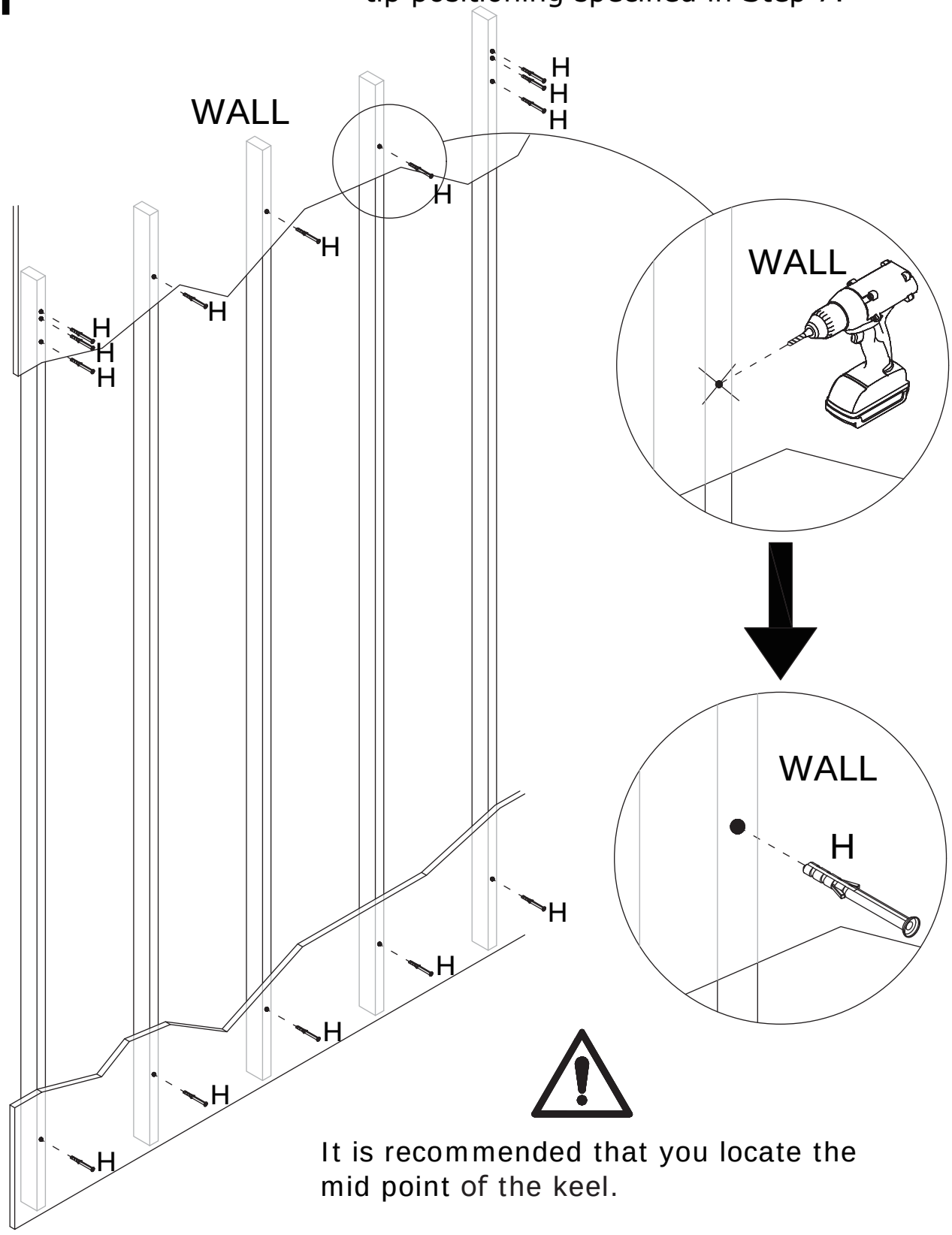

It is recommended that you locate the mid point of the keel.

9

J x 10

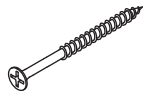

CRD0580A

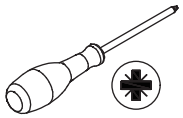



J



CRD0580A

AG



CRD0468A

Option A

Option A: Turn the cabinet upside down and install an anti-tip device.

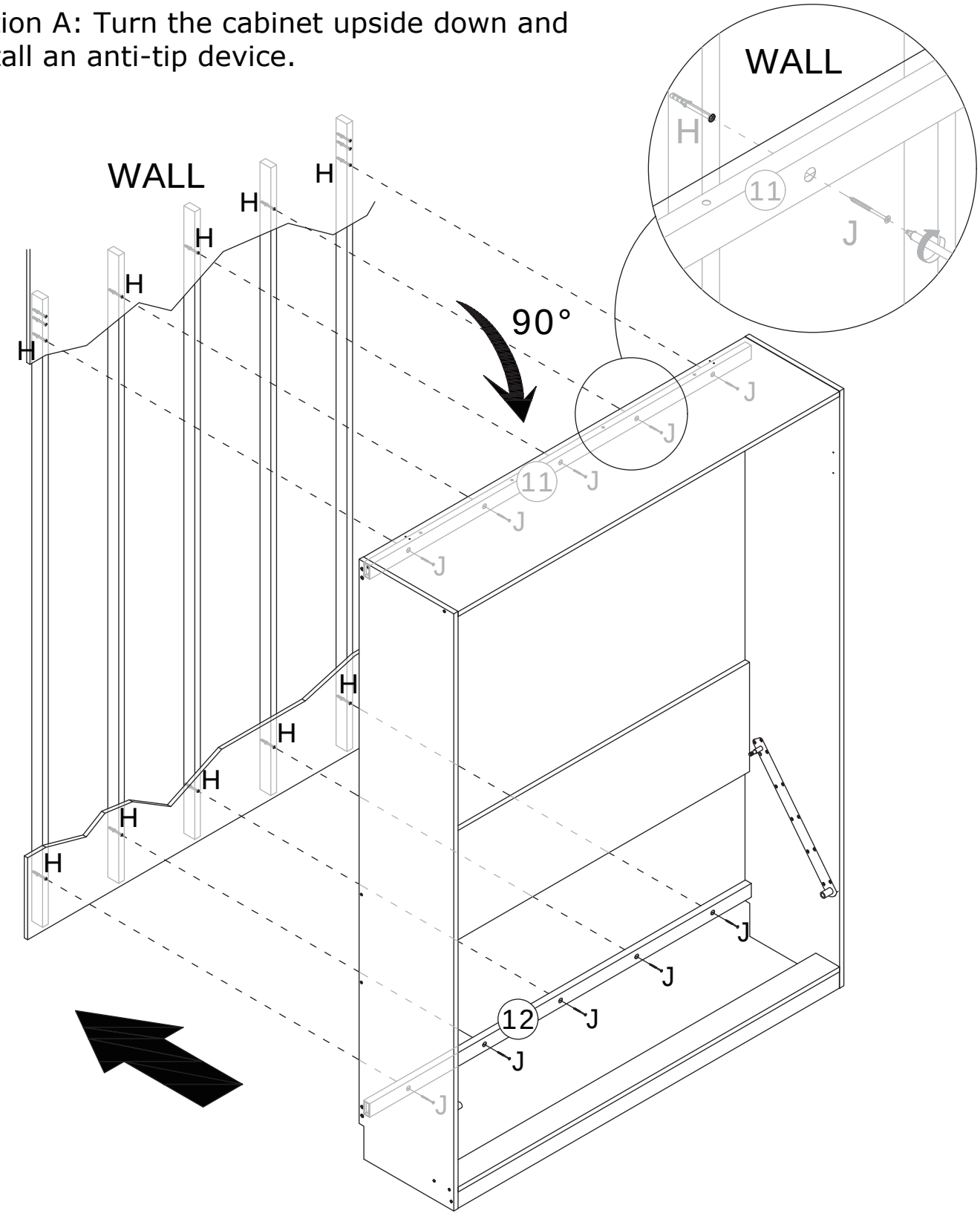

10

E x 4	X x 2	
 CRD3514A		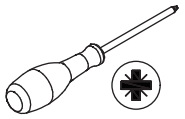

Option A

	E	AA	AB
	 CRD3514A	 CRD0314A	 CRD0416A

Option A: Secure part (X) to panel 1using screw (E).

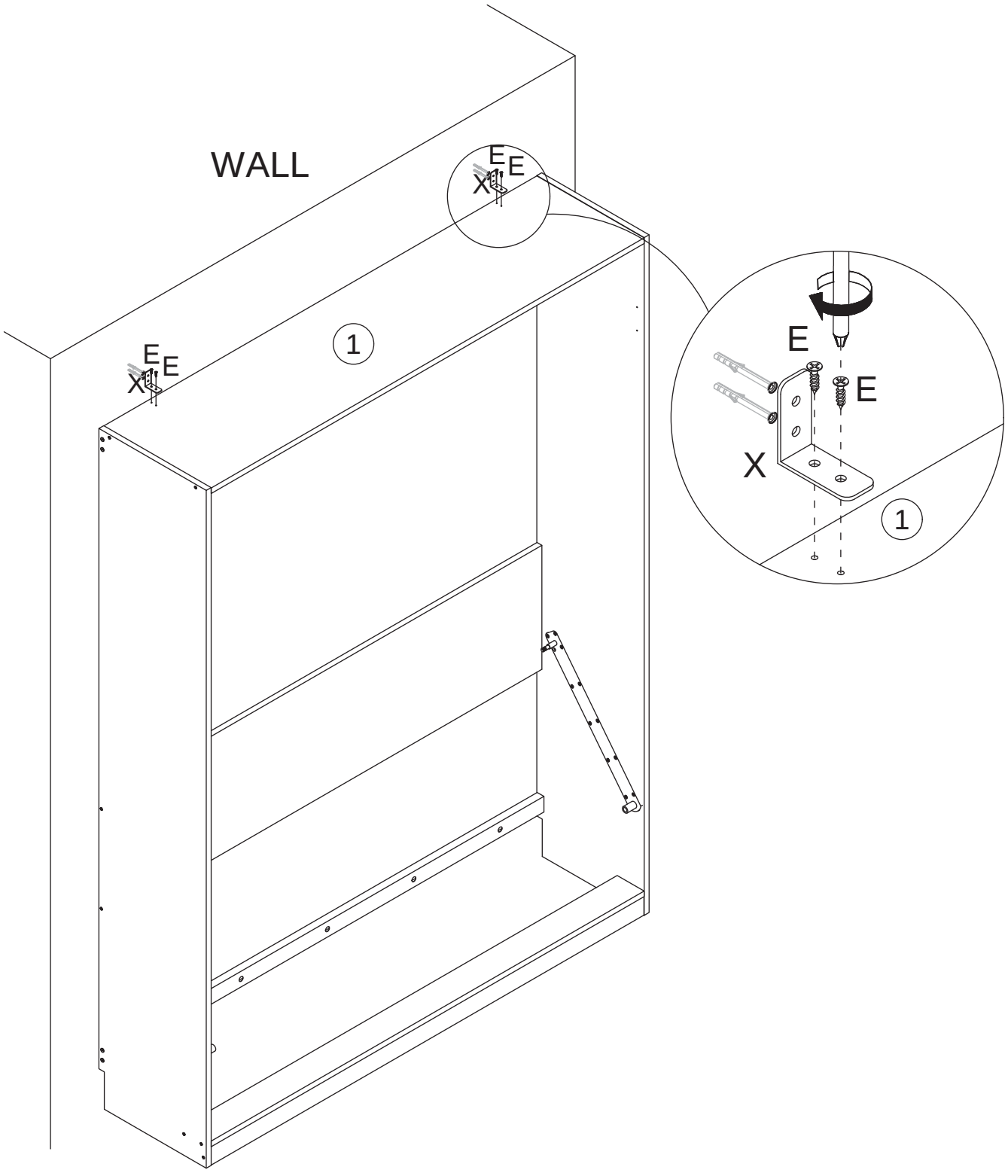

11

J x 4

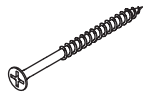

CRD0580A

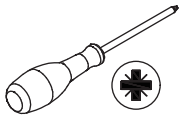

Option A



J



CRD0580A

AG



CRD0468A

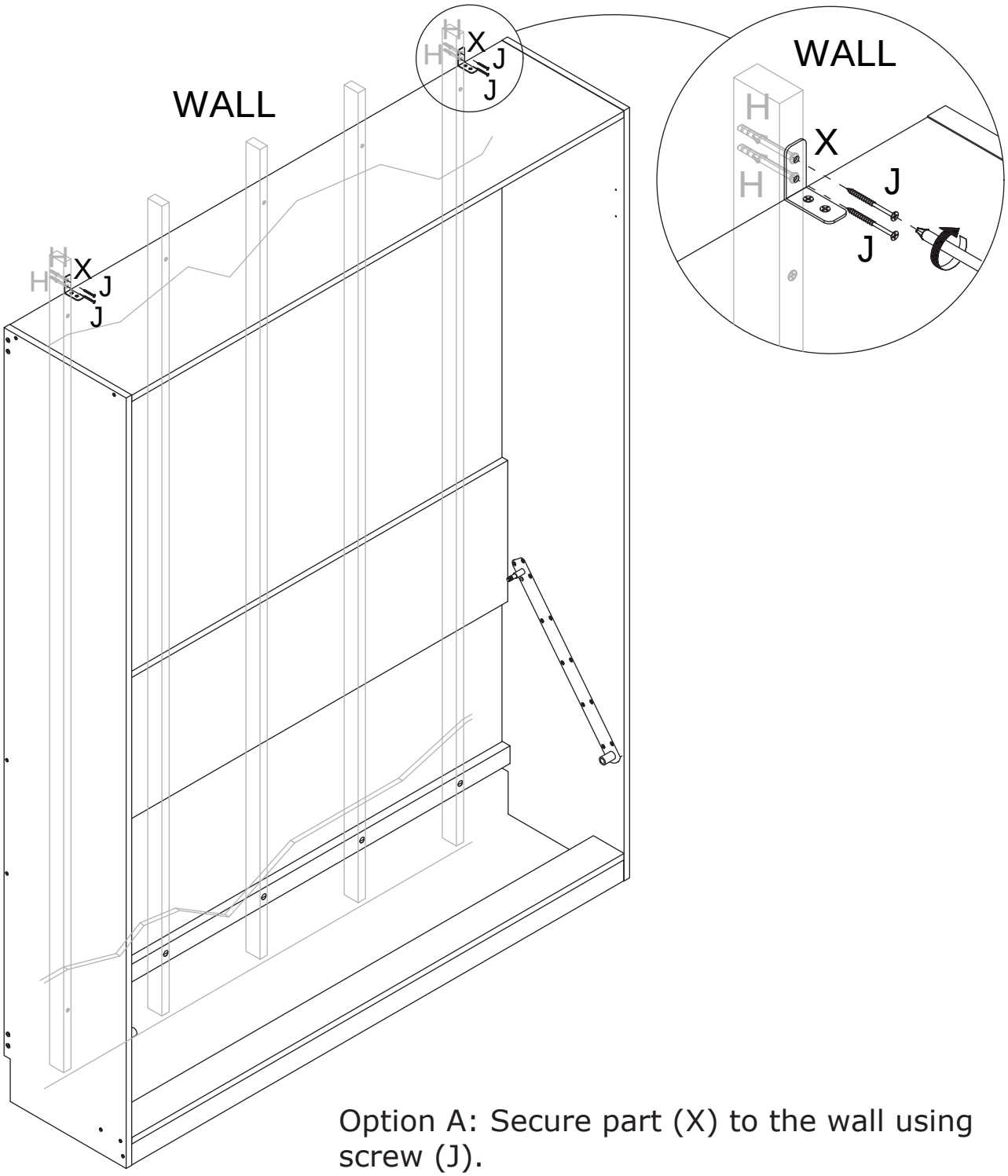

Option A: Secure part (X) to the wall using screw (J).

12

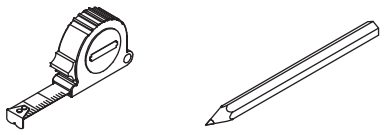

Option B

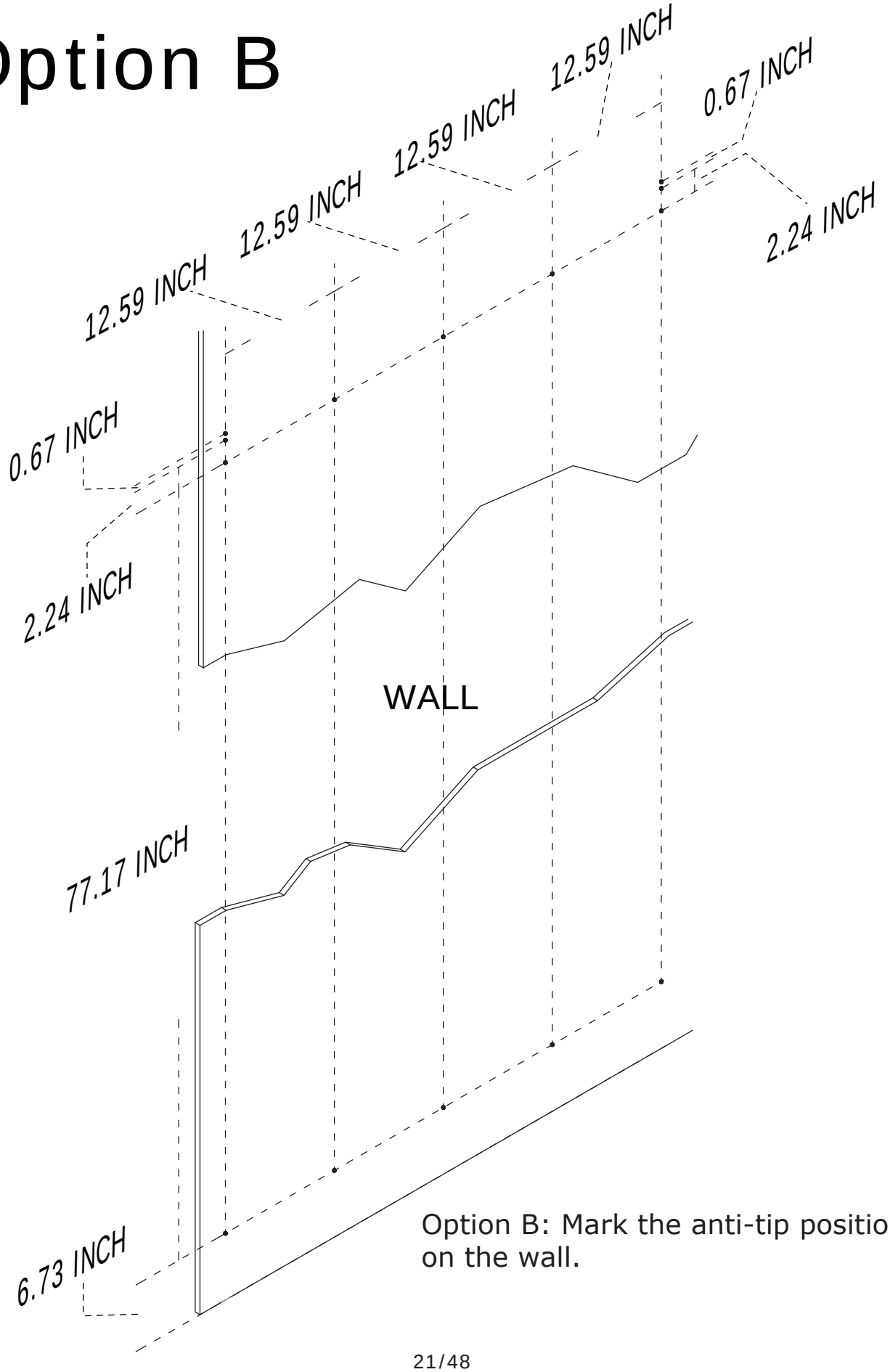

Option B: Mark the anti-tip positions on the wall.

13

AH x 10

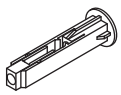



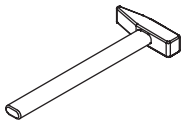

Option B

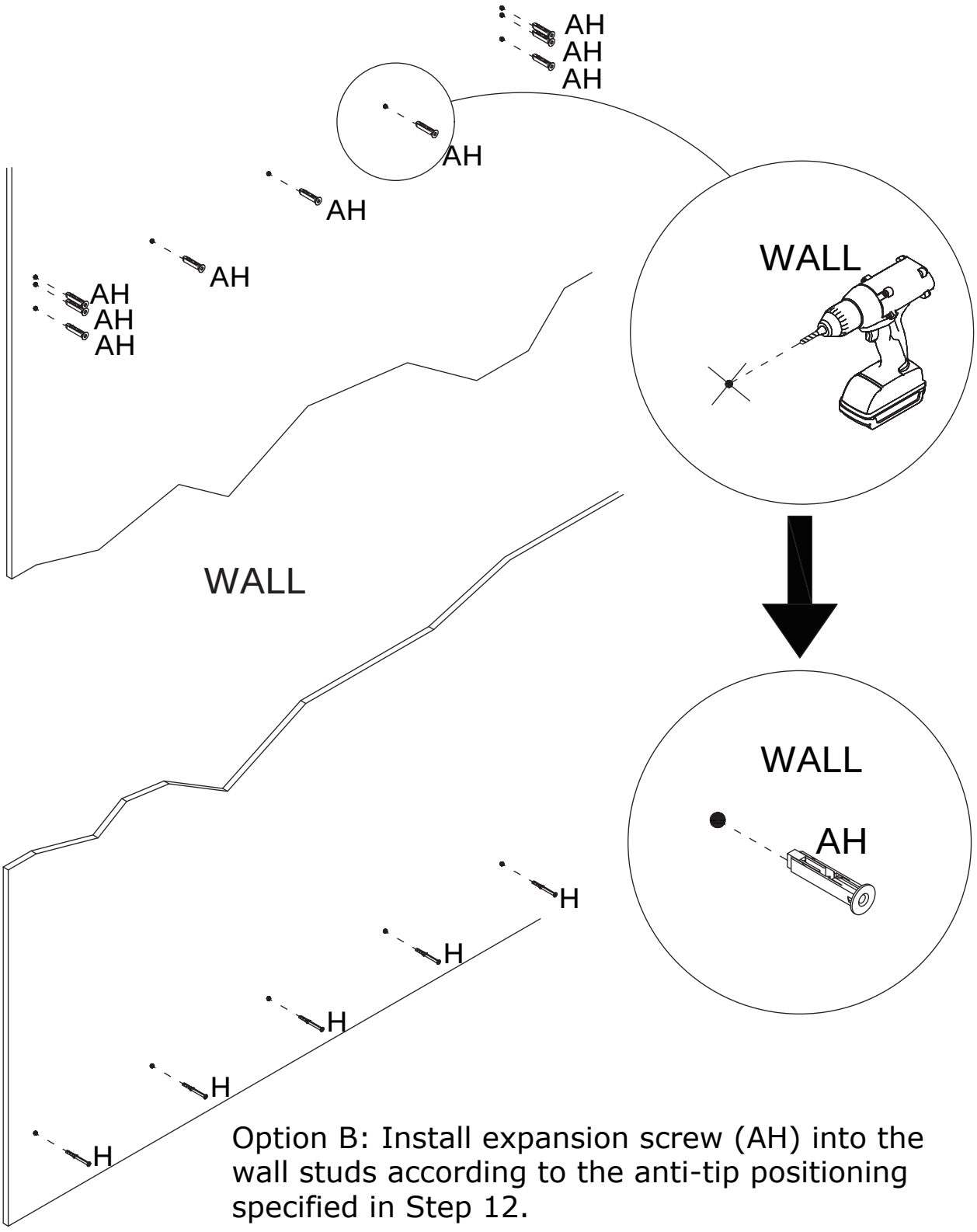

Option B: Install expansion screw (AH) into the wall studs according to the anti-tip positioning specified in Step 12.

14

AG x 10

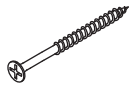

CRD0468A

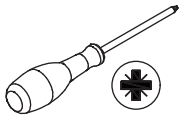



J

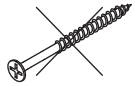

CRD0580A

AG



CRD0468A

Option B

Option B: Turn the cabinet upside down and mount it to wall.

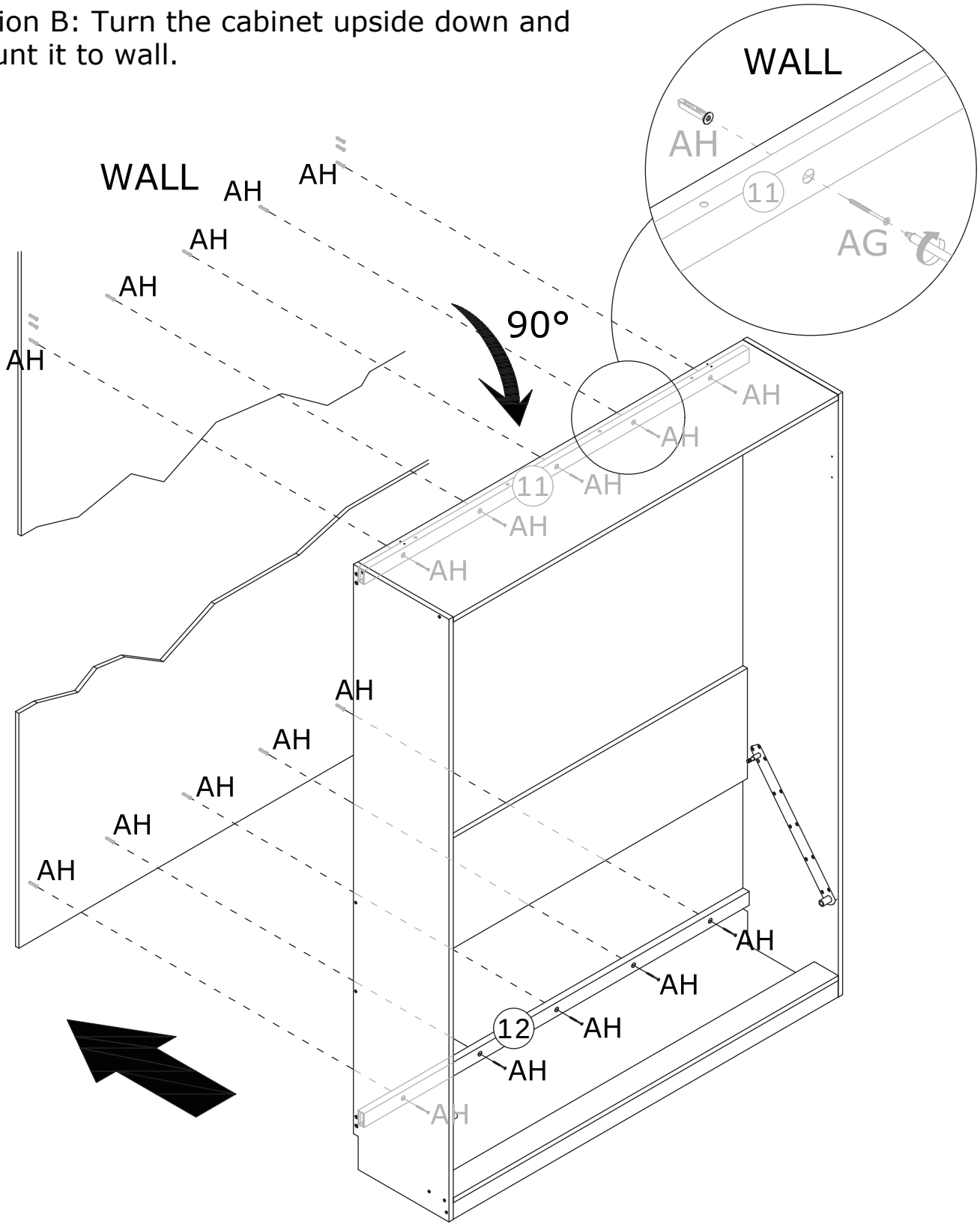

15

E x 4	X x 2	
 CRD3514A		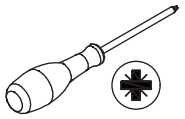

Option B

	E	AA	AB
			
	CRD3514A	CRD0314A	CRD0416A

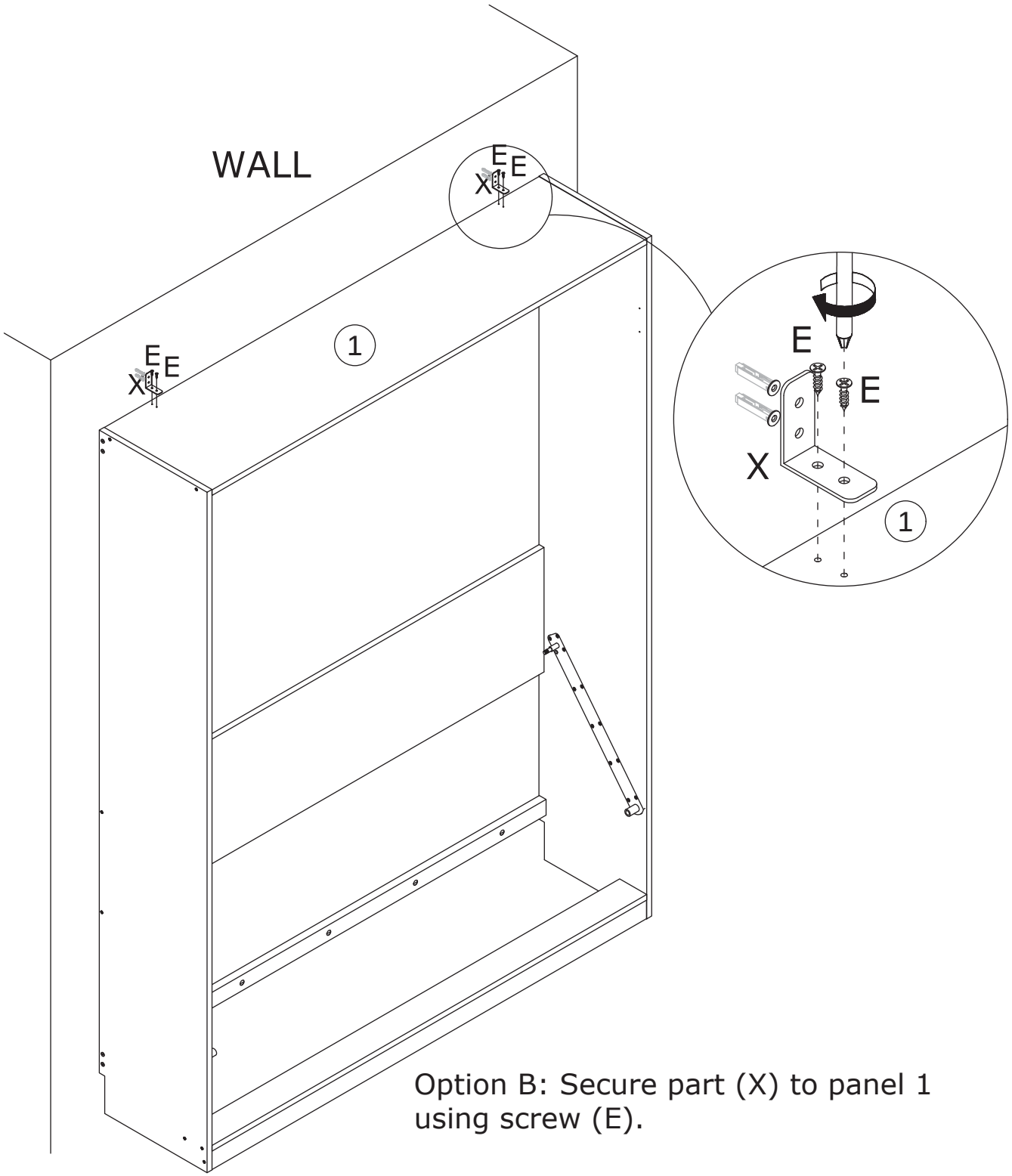

Option B: Secure part (X) to panel 1 using screw (E).

16

AG x 4

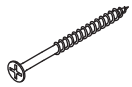

CRD0468A

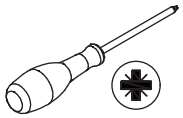

Option B



J

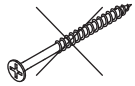

CRD0580A

AG



CRD0468A

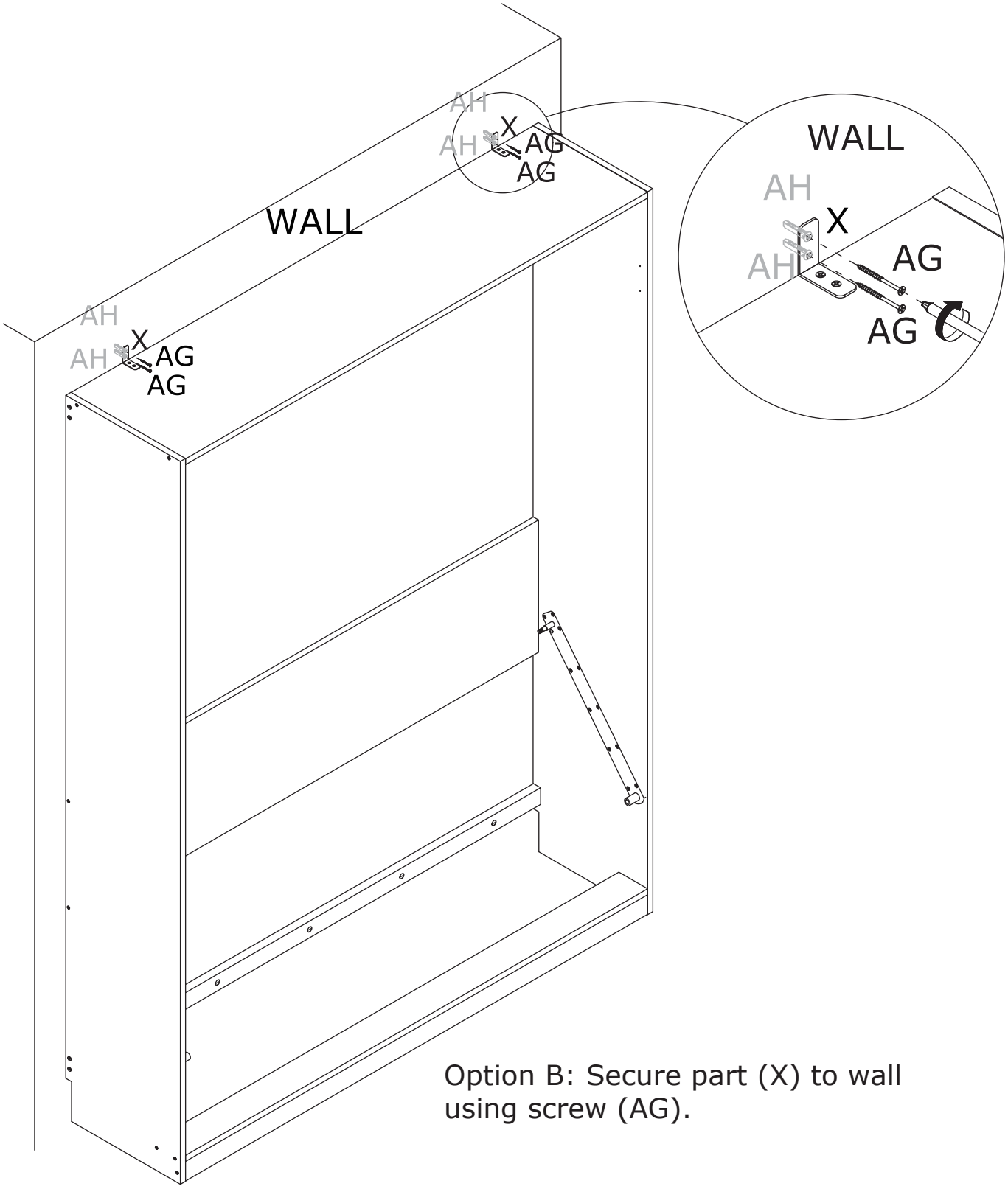

Option B: Secure part (X) to wall using screw (AG).

After installing the anti-tip device, please perform a pull test on the bed to prevent potential hazards caused by the device being loosely installed and the bed tipping over.

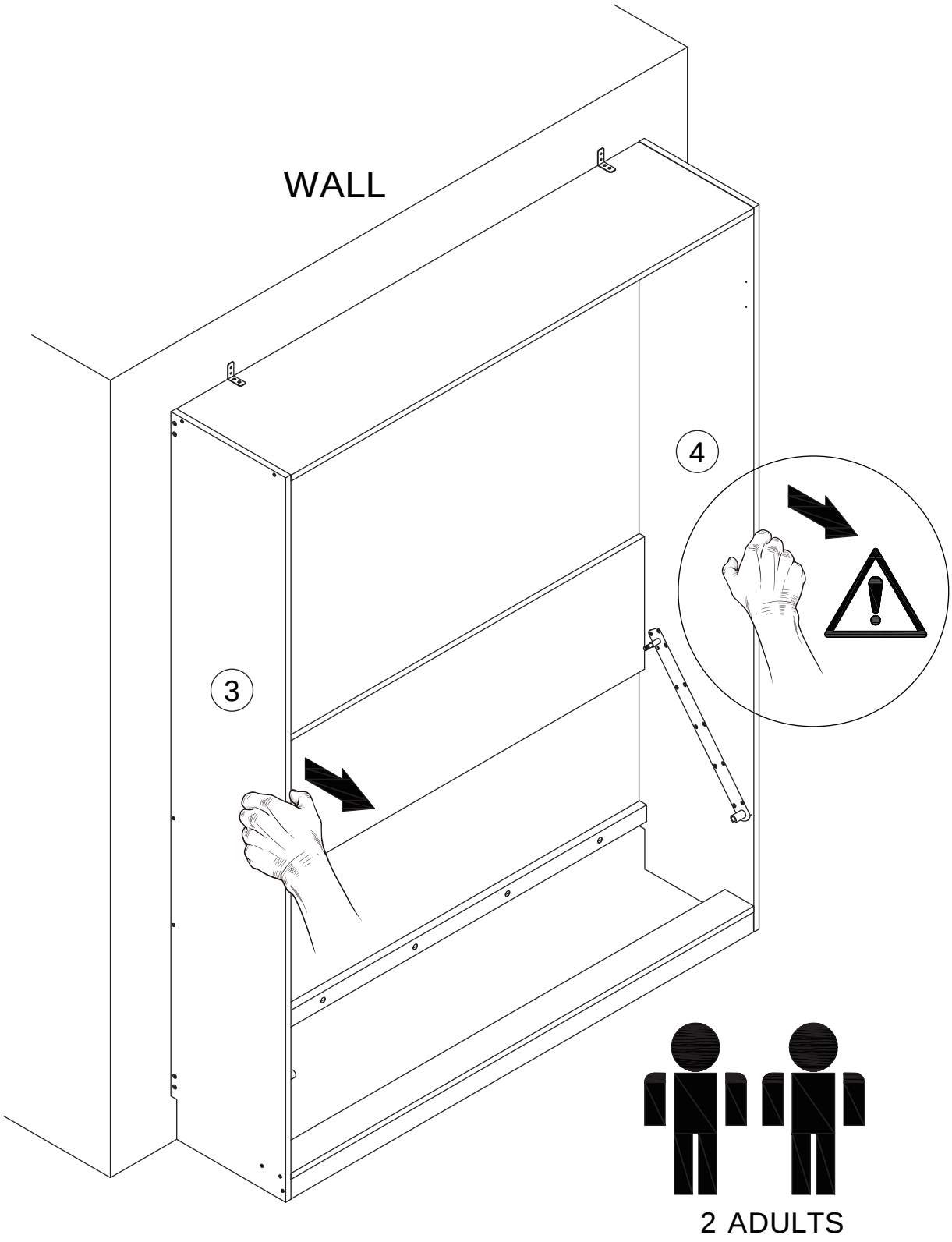

17

M x 16	AC x 1	
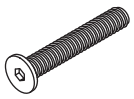 CRG0645A	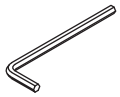 M4	

Connect parts (16), (17), and (18) to part (14) using screw (M).

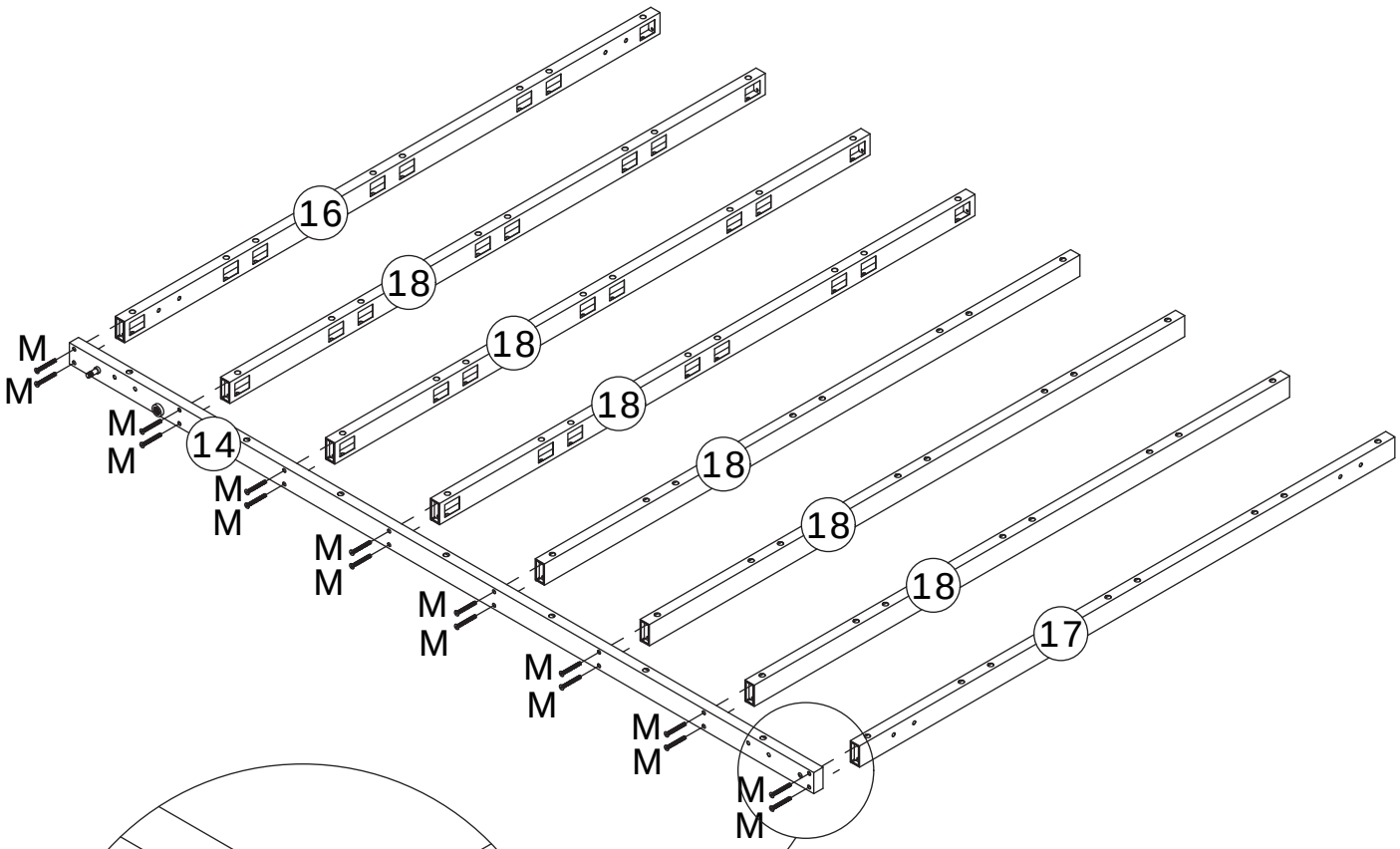

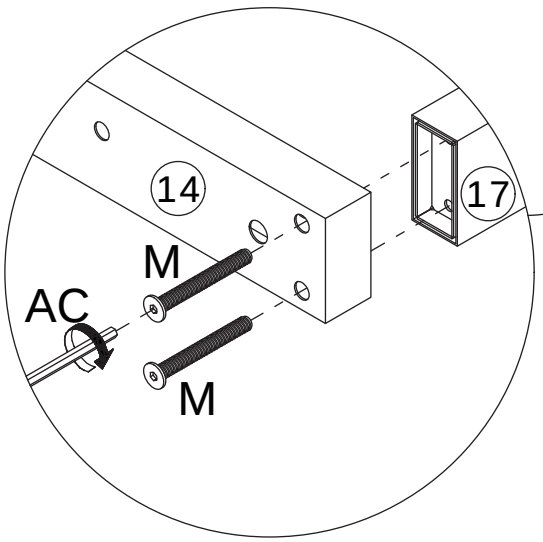



Please ensure the corners are equal diagonally. If not, loosen some screws, make adjustments, and then tighten again.

18

M x 16	AC x 1	
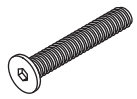 CRG0645A	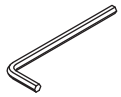 M4	

Connect parts (16), (17), and (18) to part (15) using screw (M).

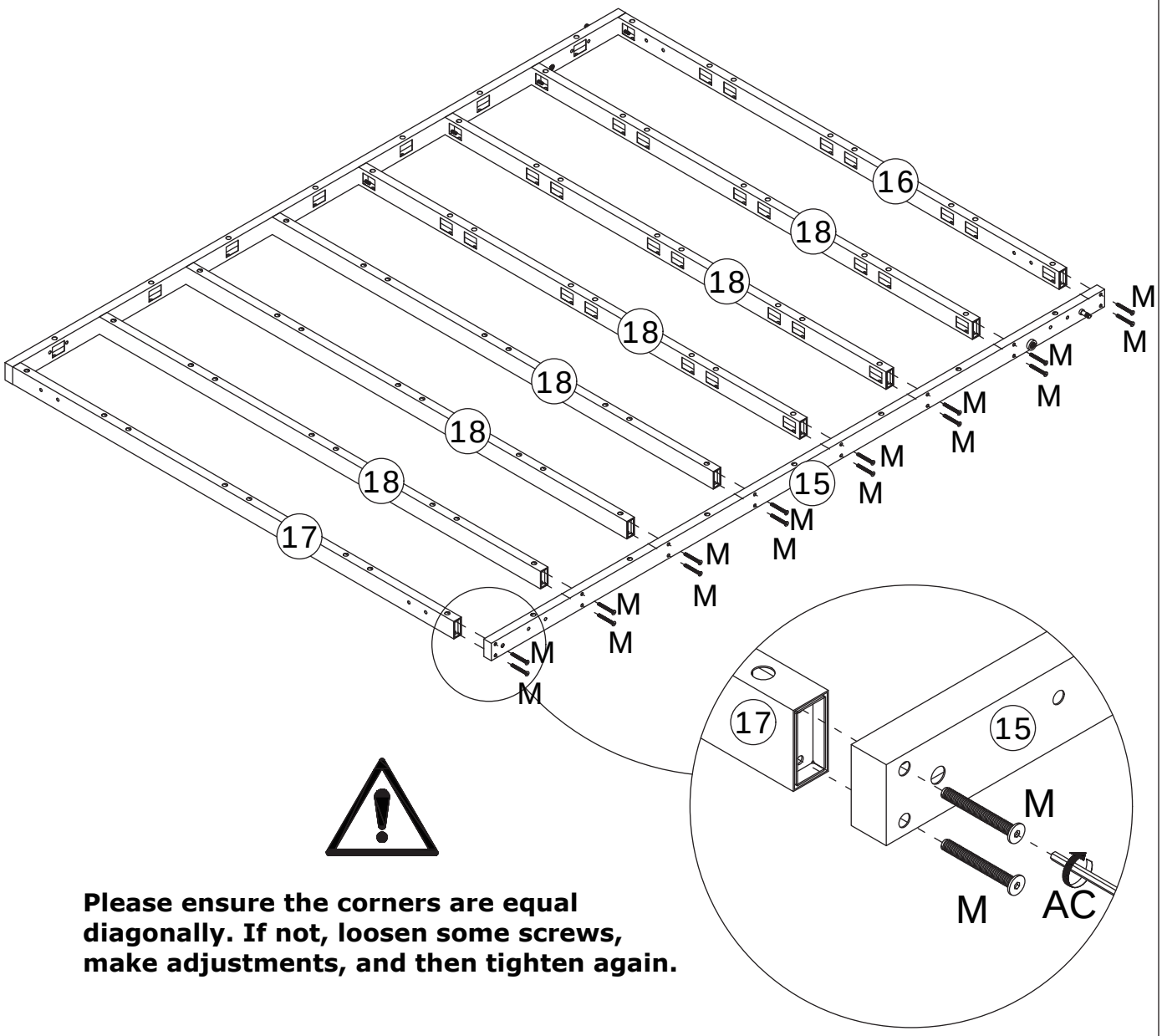

Please ensure the corners are equal diagonally. If not, loosen some screws, make adjustments, and then tighten again.

19

G x 32	AC x 1	
 CRG0612A	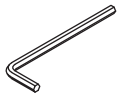 M4	

Attach parts (16), (17), and (18) to panels 8 and 9 using screw (G).
Pay attention to the orientation of panels 8 and 9.

As shown, the two pre-drilled holes on panels 8 and 9 are close to part (17).

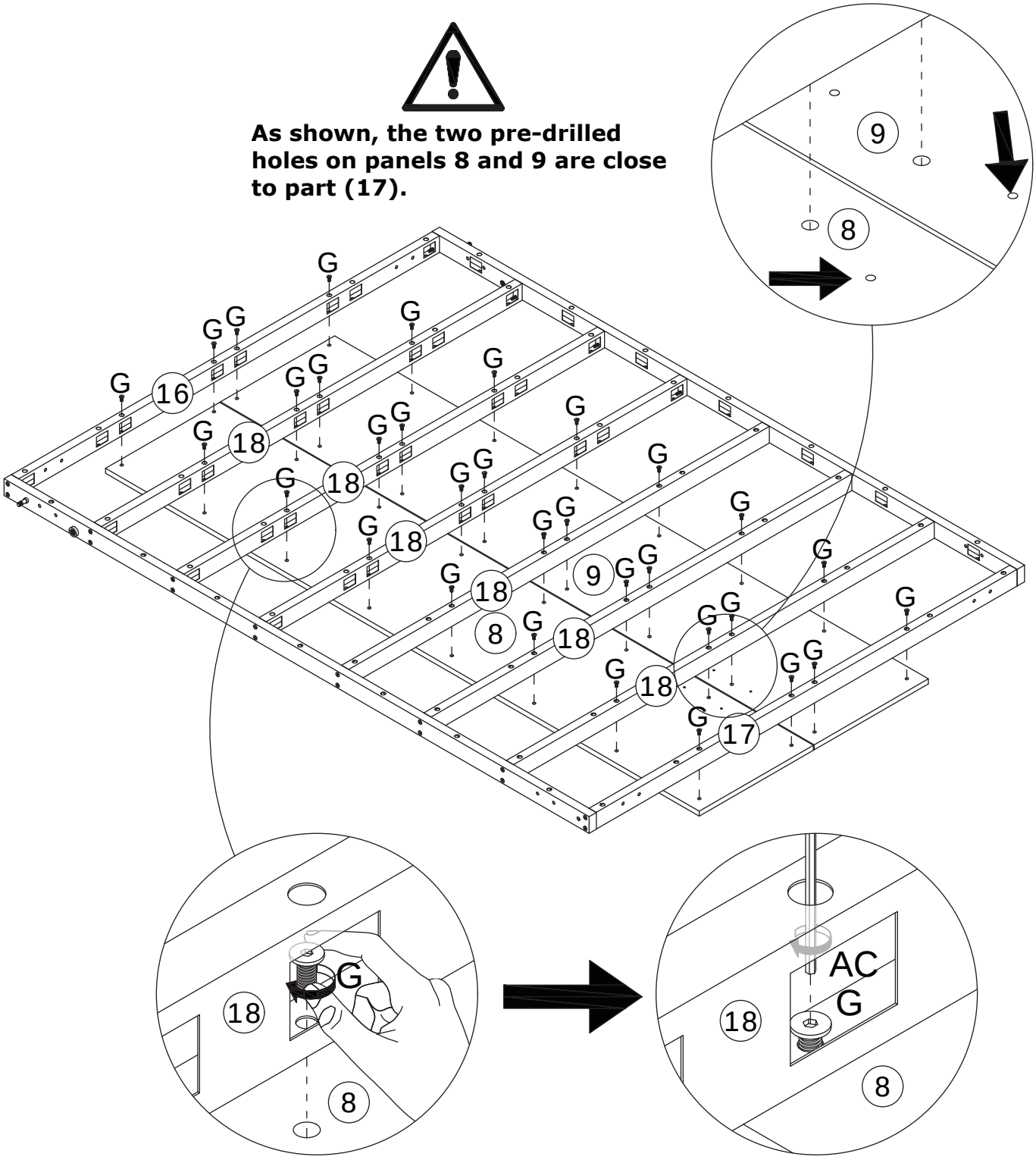

20

L x 4	AC x 1	
 CRG0616A	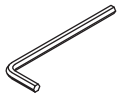 M4	

Secure part (22) to part (16) using screw (L).

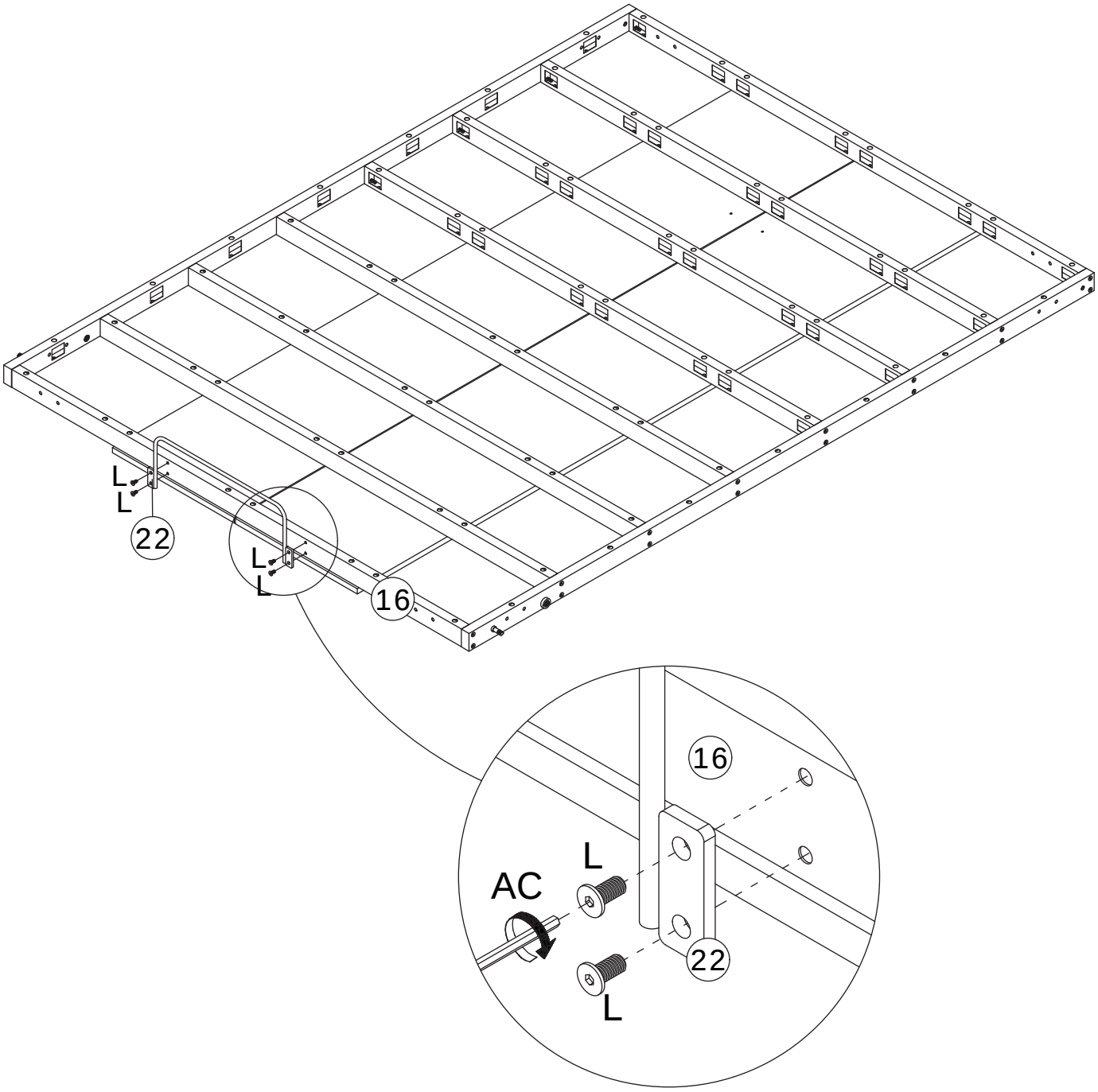

21

G x 4	S x 2	AC x 1	AF x 1	
CRG0612A		M4	M8	

First, insert part (19) into part (15); insert part (20) into part (14). Then connect parts (19) and (20) to part (21) using screw (G). Finally, secure part (19) to part (15), and part (20) to part (14) using nut (S).

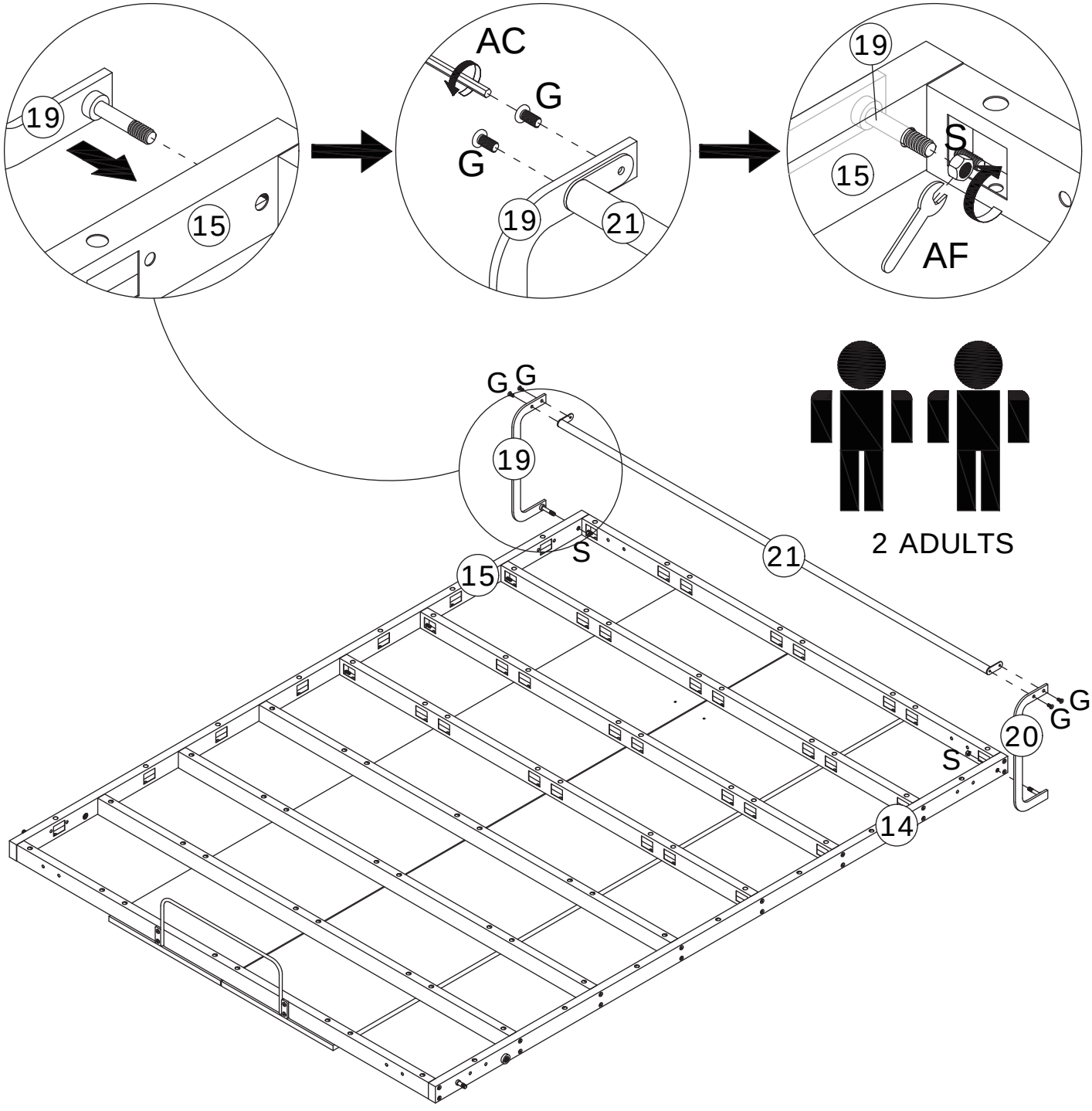

22

N x 4	P x 16	Q x 16	AC x 1	AE x 1	
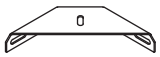	 CRG0635A		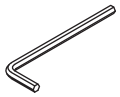 M4	 M6	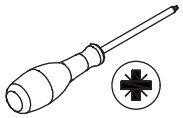

Secure part (N) to the corners of the mounting unit using screw (P) and nut (Q).

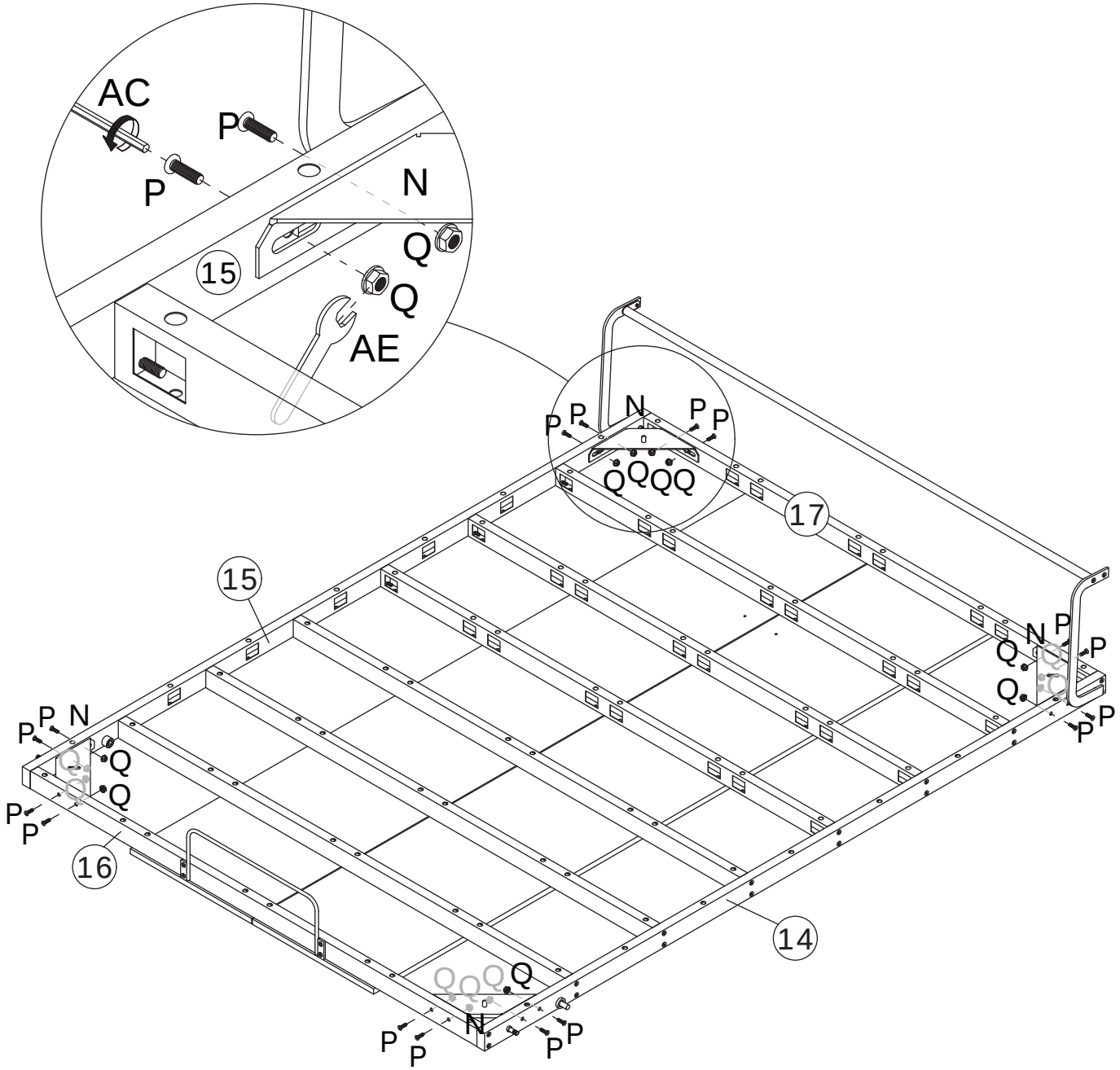

23

R x 2	T x 2	AF x 1	
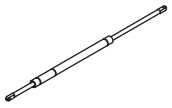		 M8	

Attach rod (R) to parts (14) and (15) using nut (T).

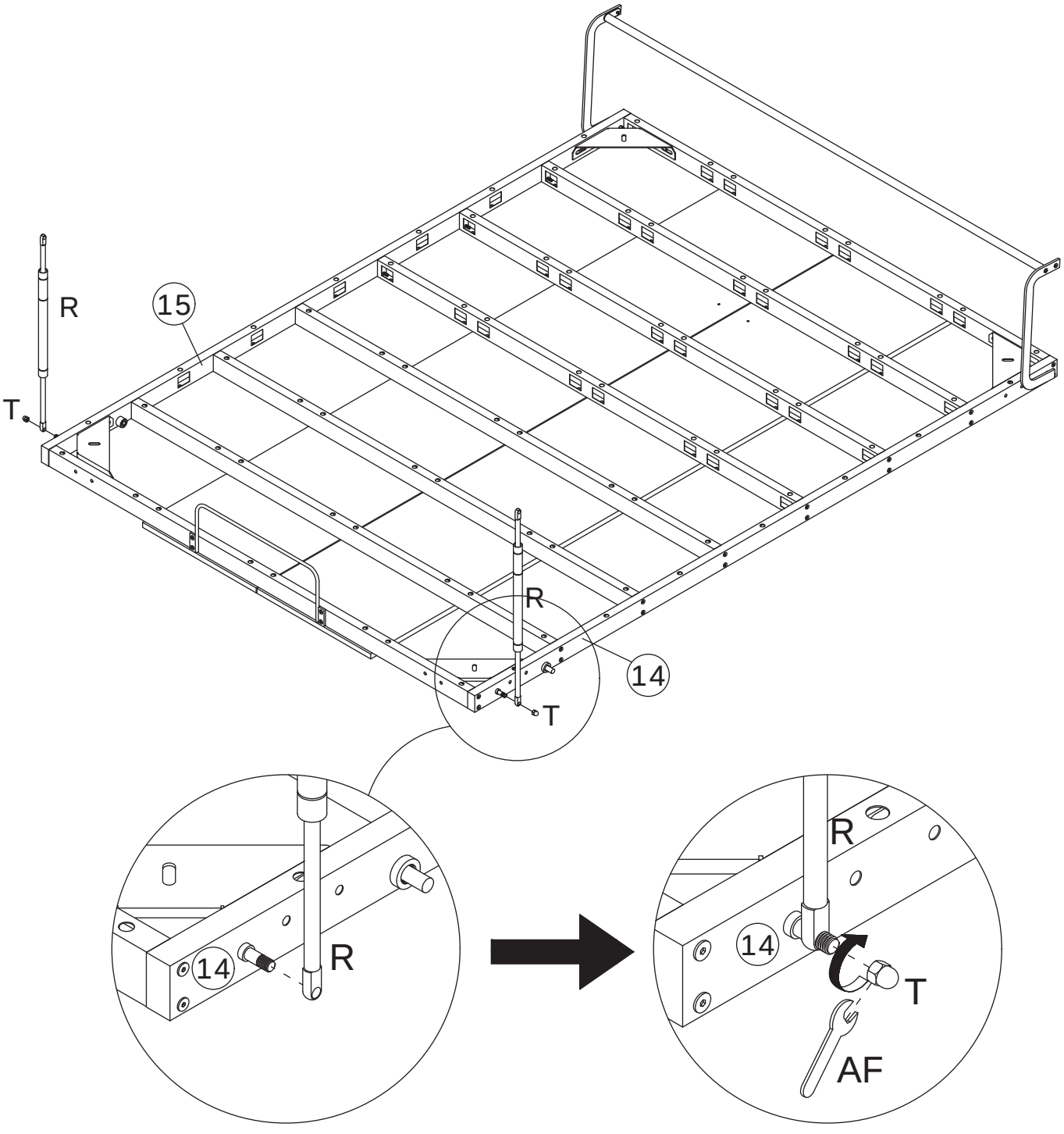

24

Assemble the bed frame to the main body.

Caution: Be careful not to pinch your fingers.

Keep hands away from the area when lifting the bed frame to avoid pinching .

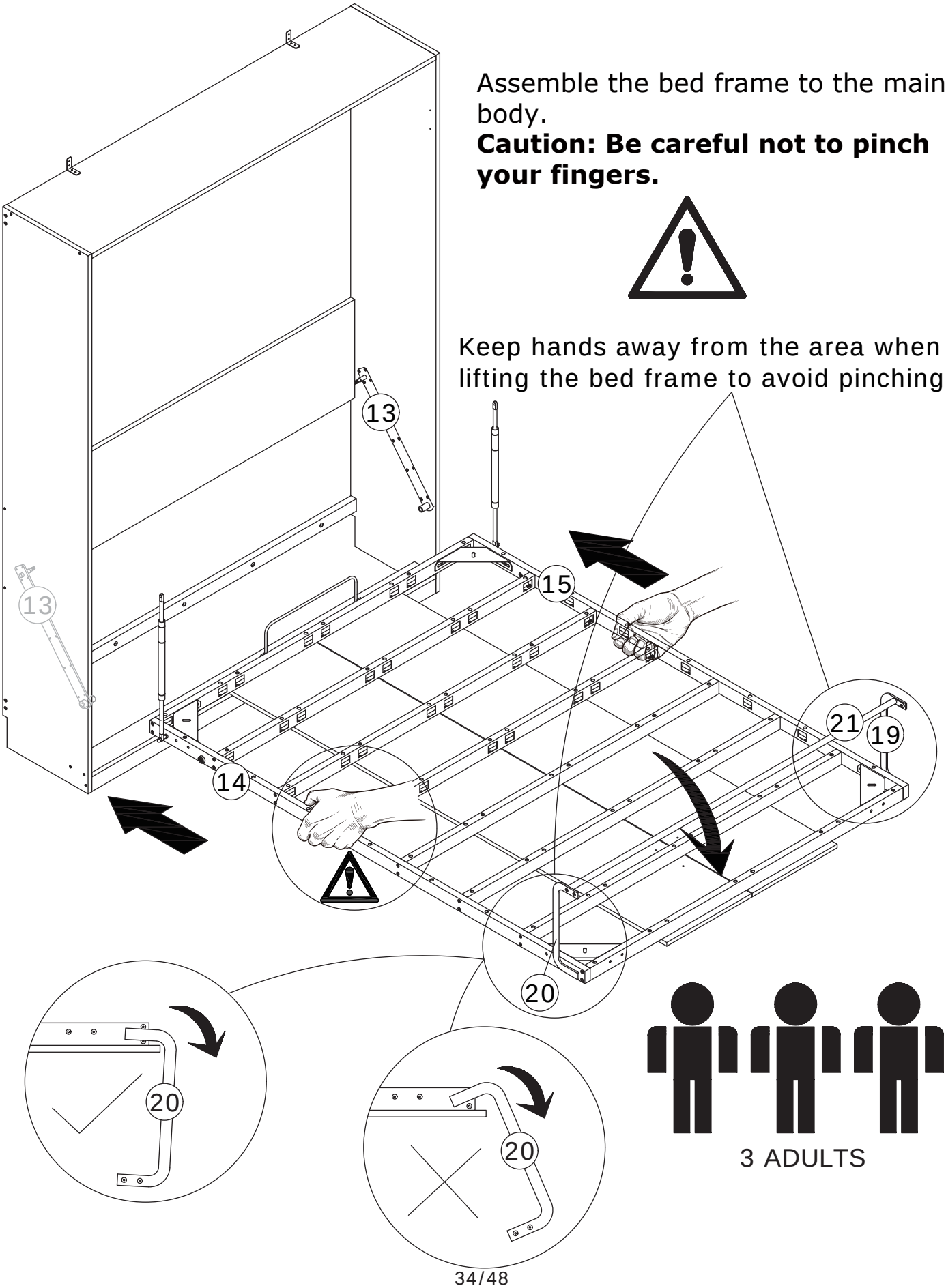

3 ADULTS

25

AD x 1

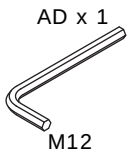

Screw part (23) into parts (14) and (15) and (13).

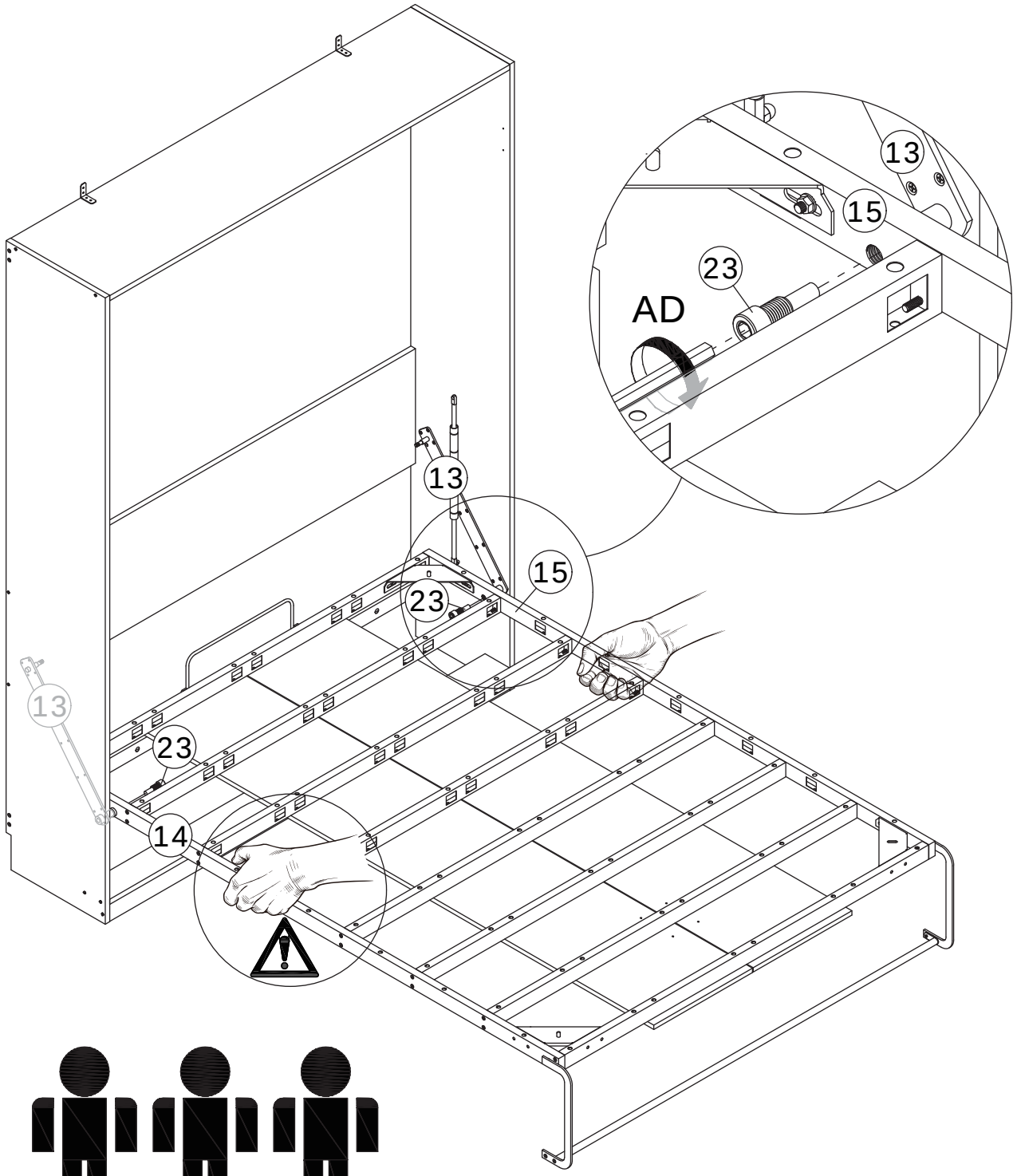

3 ADULTS

26

U x 2	V x 4	
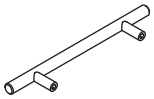	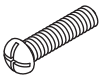 CRE0422A	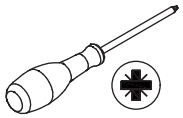

Secure handle (U) to panels 8 and 9 using screw (V).

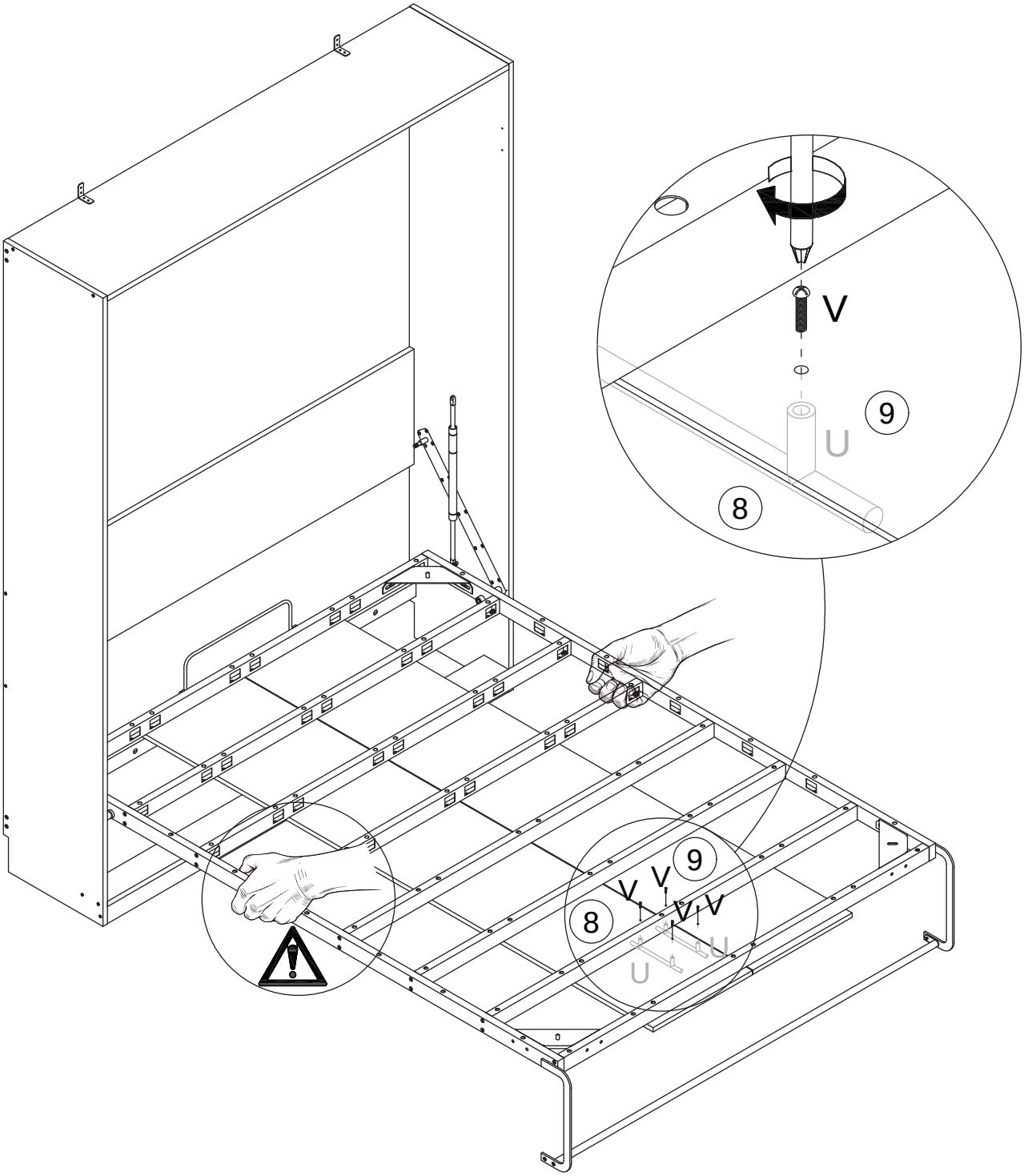

27

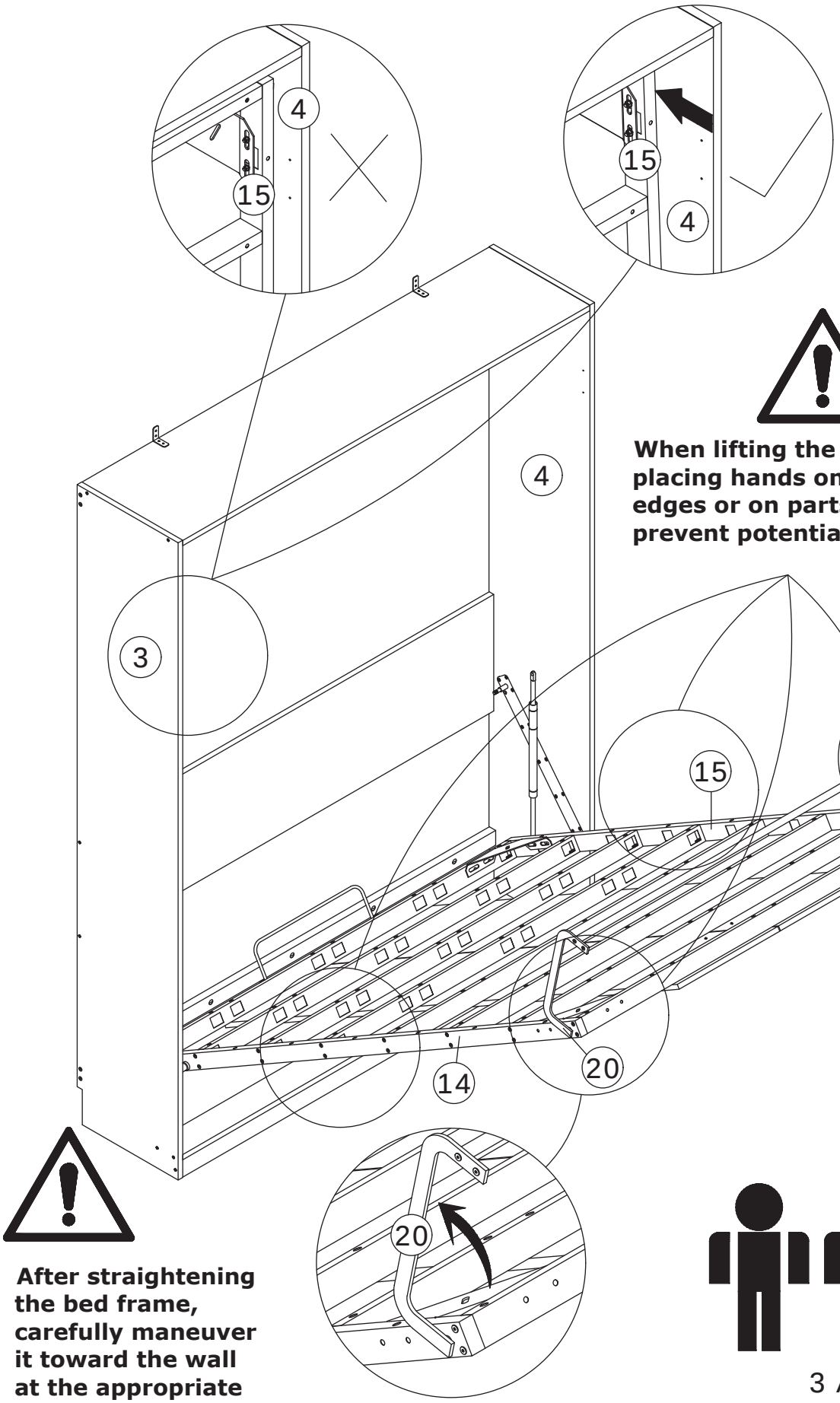

Fold down the bed frame and push it back against the wall a suitable distance.

When lifting the bed frame, avoid placing hands on the frame's edges or on parts (19) and (20) to prevent potential crushing injuries.

After straightening the bed frame, carefully maneuver it toward the wall at the appropriate angle.

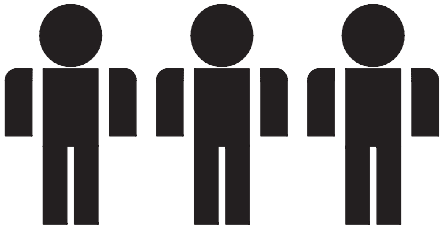

3 ADULTS

28

T x 2	AF x 1	
	 M8	

Secure rod (R) to part (13) using nut (T).

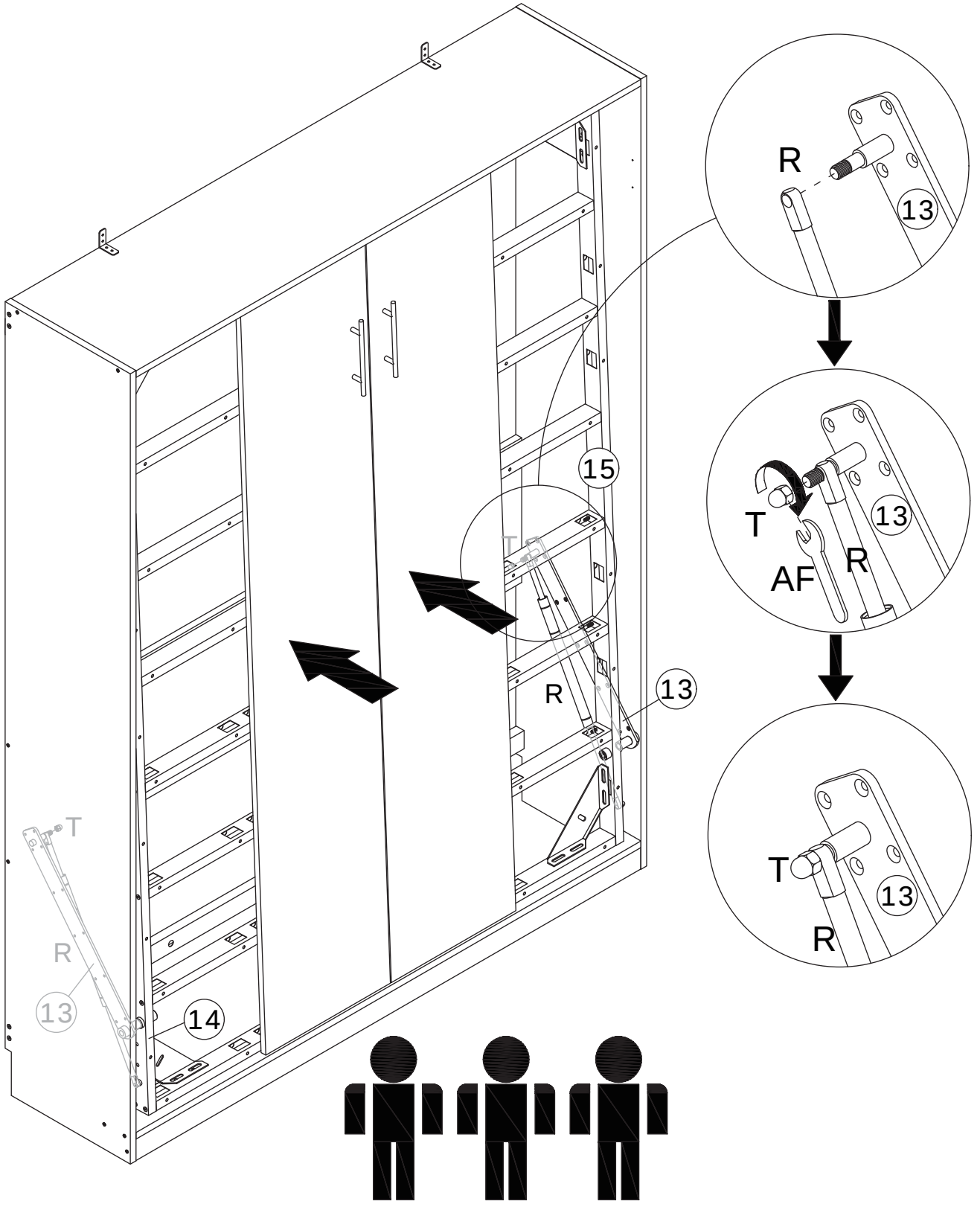

3 ADULTS

29

Open the bed frame and flip down parts (19), (20), and (21).
Caution: Be careful not to pinch your fingers.

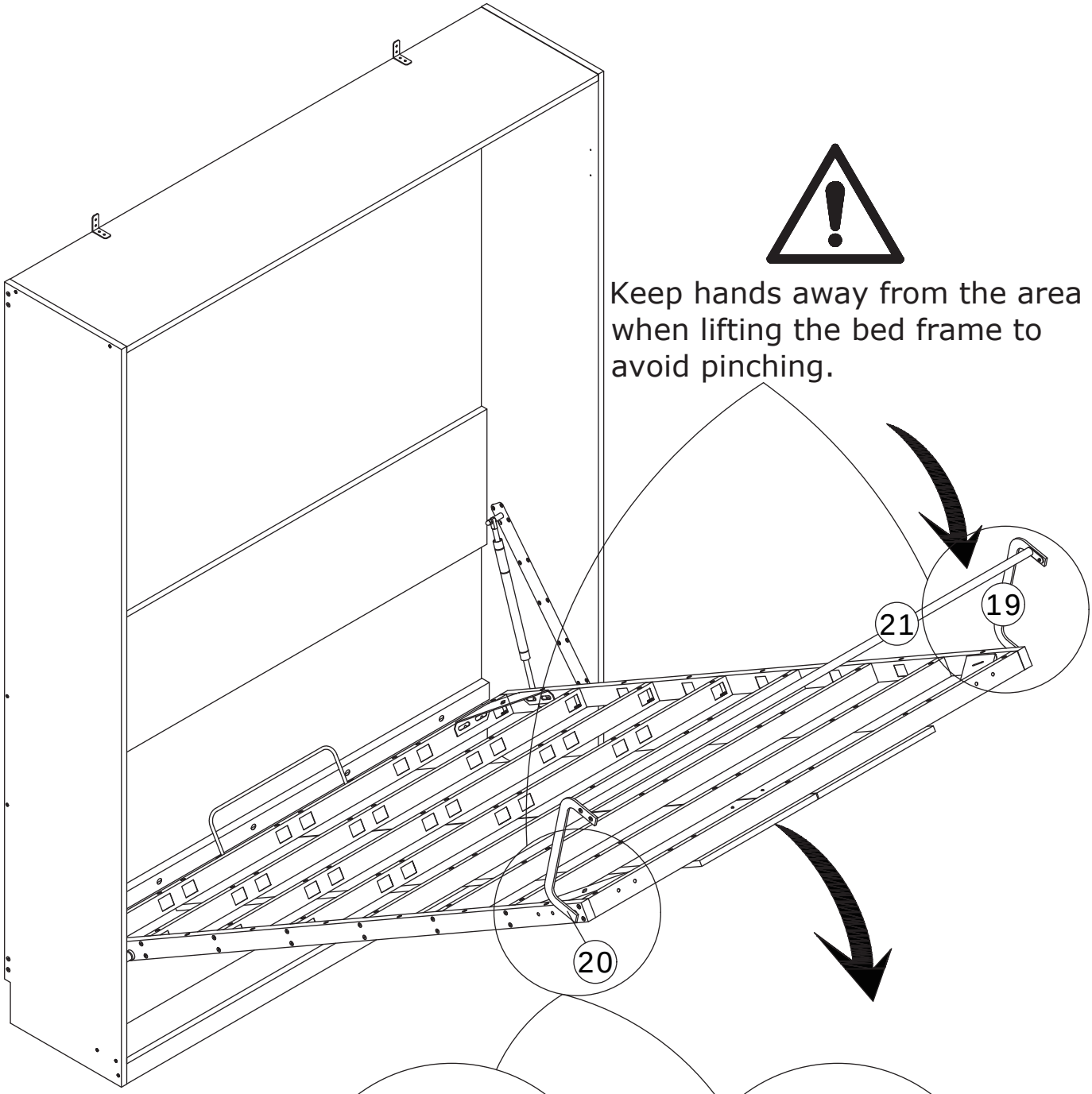

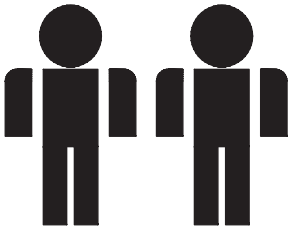
2 ADULTS

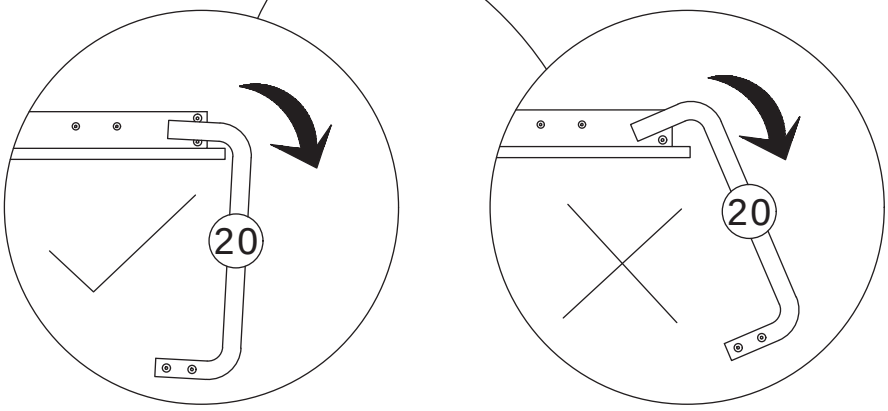

30

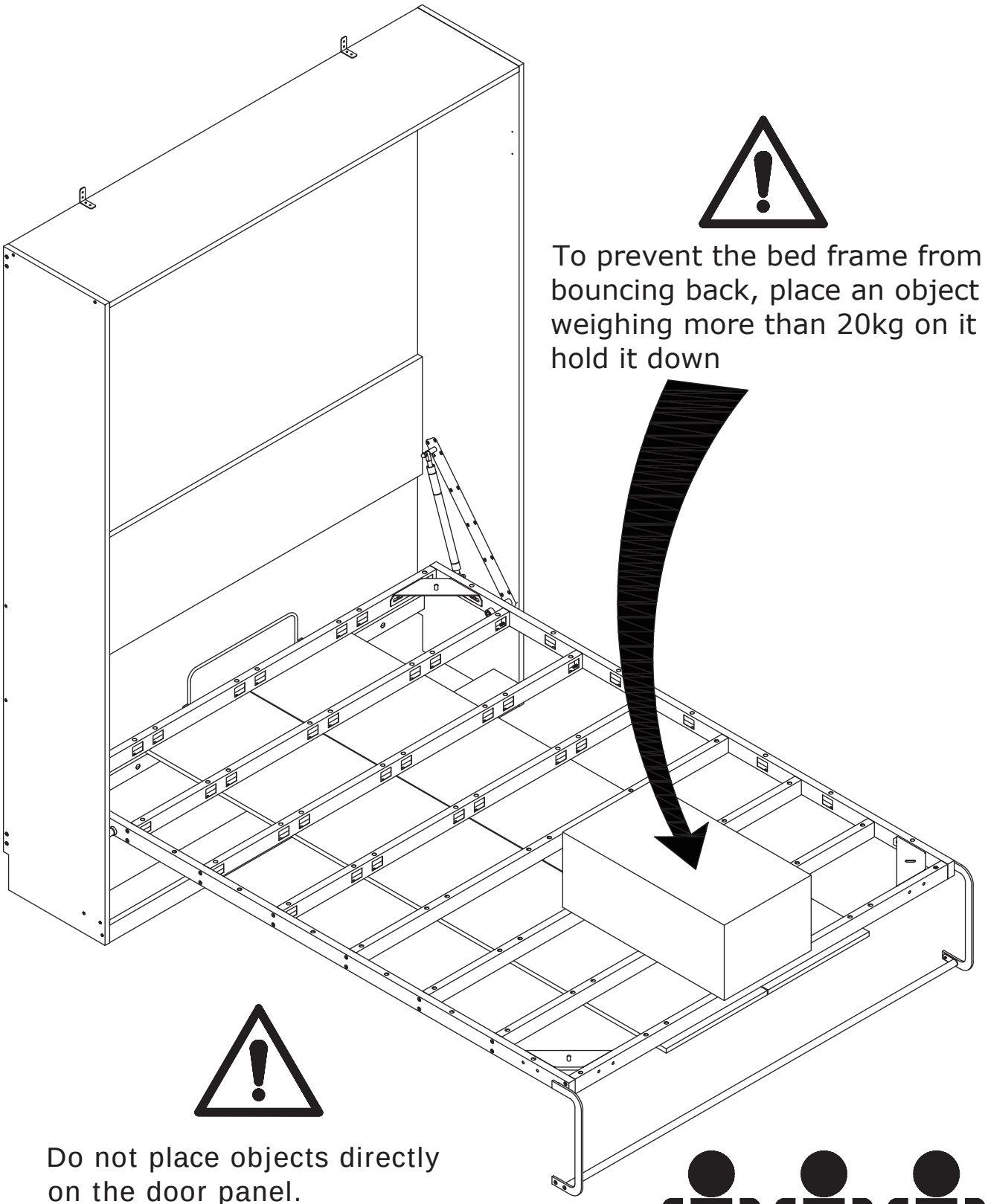

To prevent the bed frame from bouncing back, place an object weighing more than 20kg on it to hold it down

Do not place objects directly on the door panel.

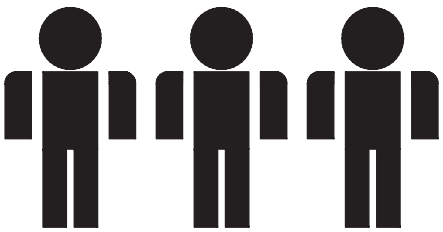

3 ADULTS

31

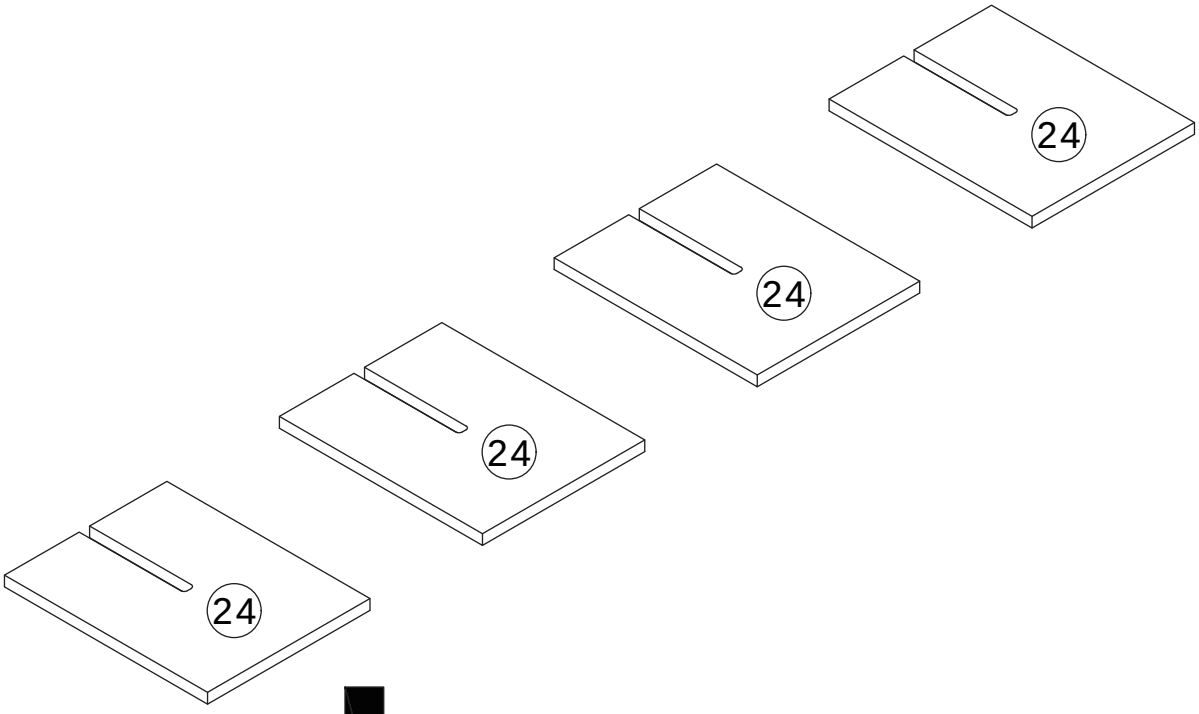

Connect two panel 24 together.

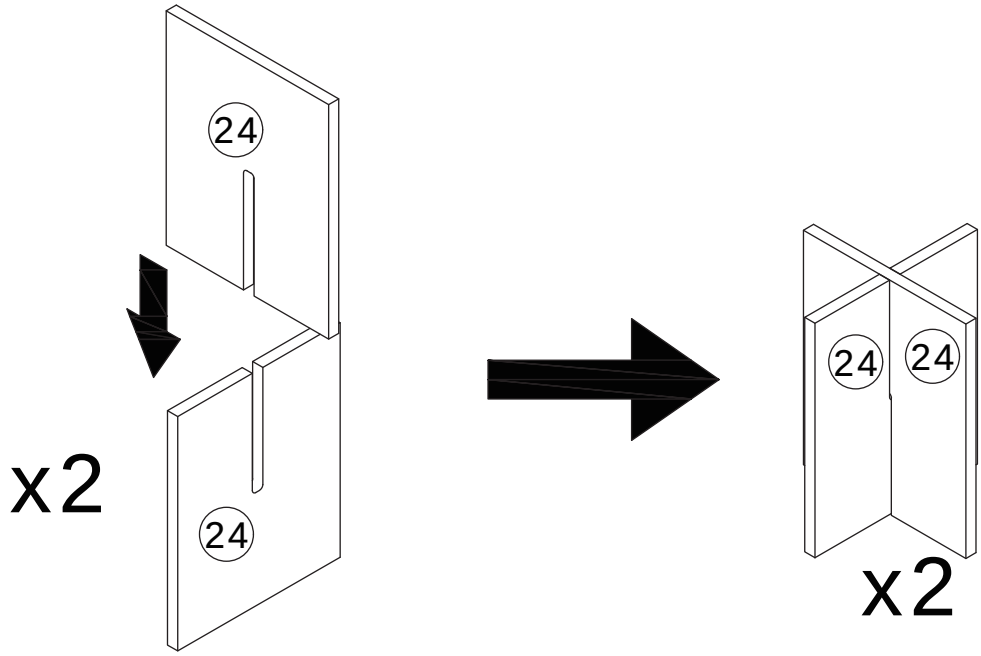

Panel 24 is only used as an auxiliary plate, does not participate in cabinet assembly, and can be disposed of as you wish after use.

32

E x 4	W x 2	Z x 2	AA x 4	
 CRD3514A	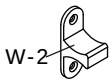 W-2	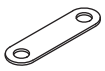	 CRD0314A	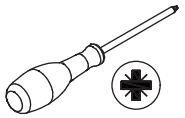

	E	AA	AB
	 CRD3514A	 CRD0314A	 CRD0416A

Secure part (Z) to panels 7 and 10 using screw (AA).
Secure part (W-2) to panels 7 and 10 using screw (E).

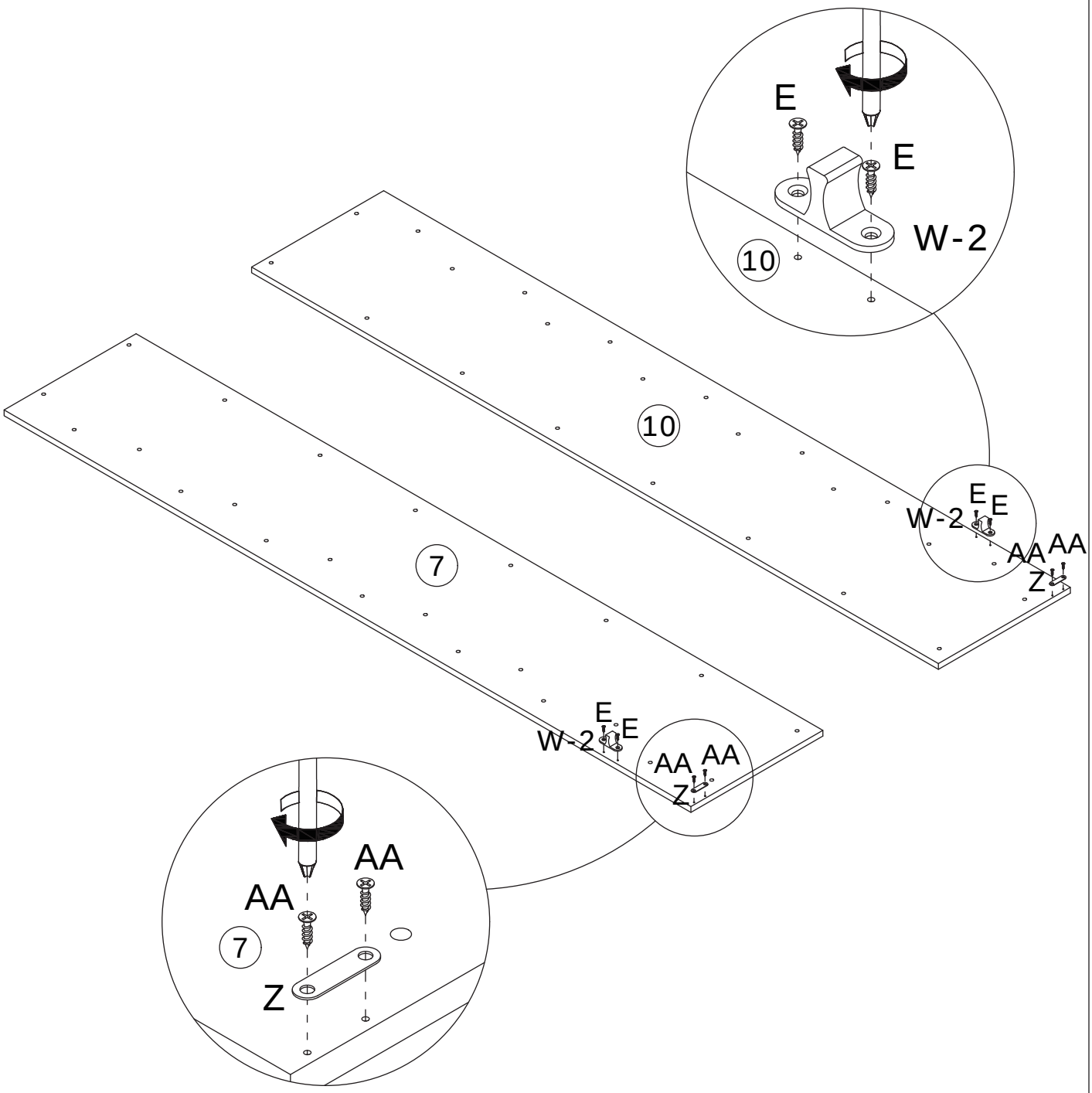

33

G x 23	AC x 1	
 CRG0612A	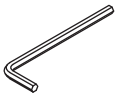 M4	

Secure panel 7 to parts (16), (17), and (18) using screw (G).
Use the assembled component (24) as a support.

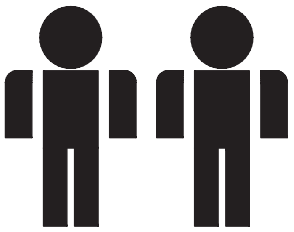

2 ADULTS



Auxiliary panel 24 serves to support panel 7.

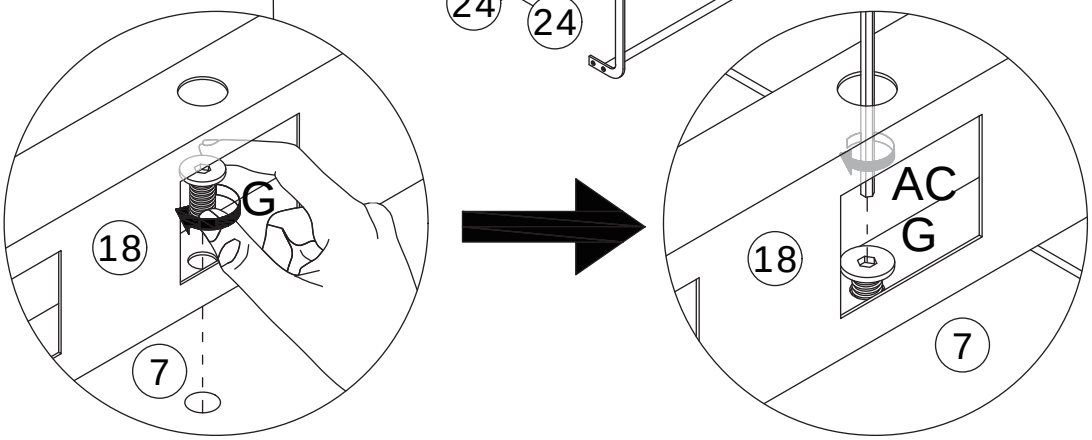

34

G x 23	AC x 1	
CRG0612A	M4	

Secure panel 10 to parts (16), (17), and (18) using screw (G).
Use the assembled component (24) as a support.

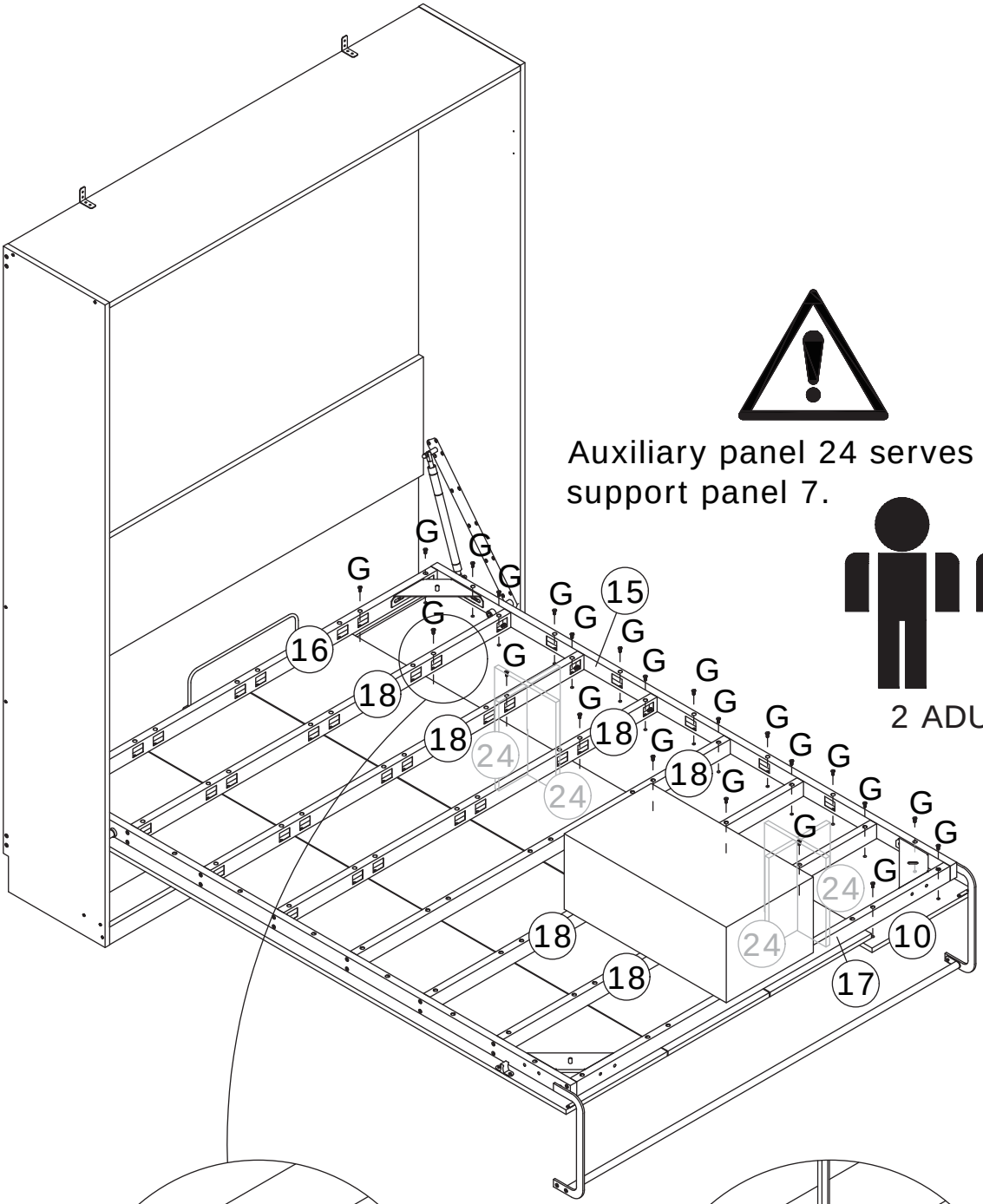

Auxiliary panel 24 serves to support panel 7.

2 ADULTS

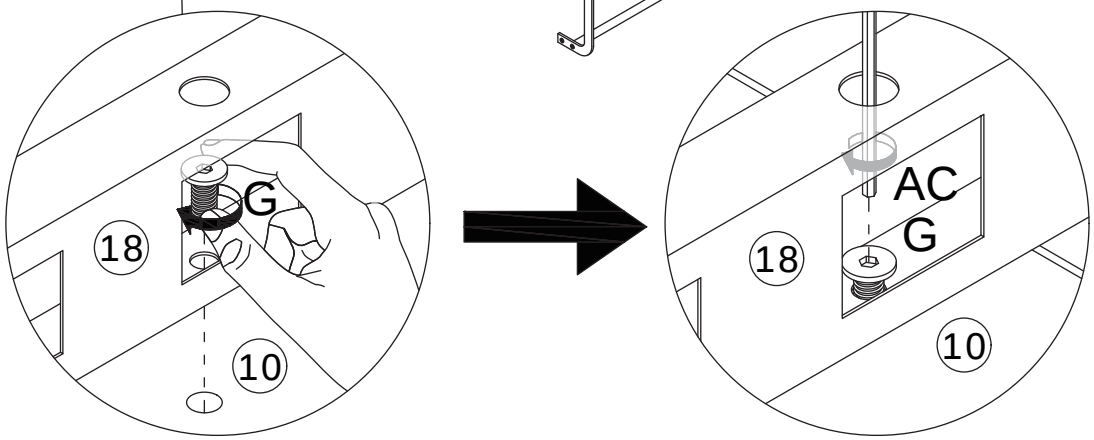

35

E x 4	W x 2	
 CRD3514A	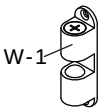 W-1	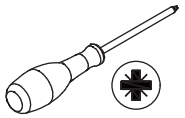

Secure part (W-1) to panels 3 and 4 using screw (E).

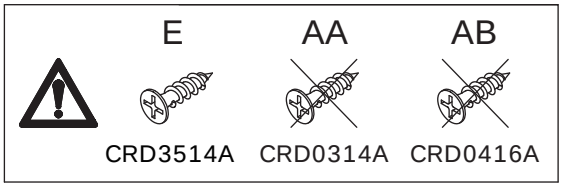

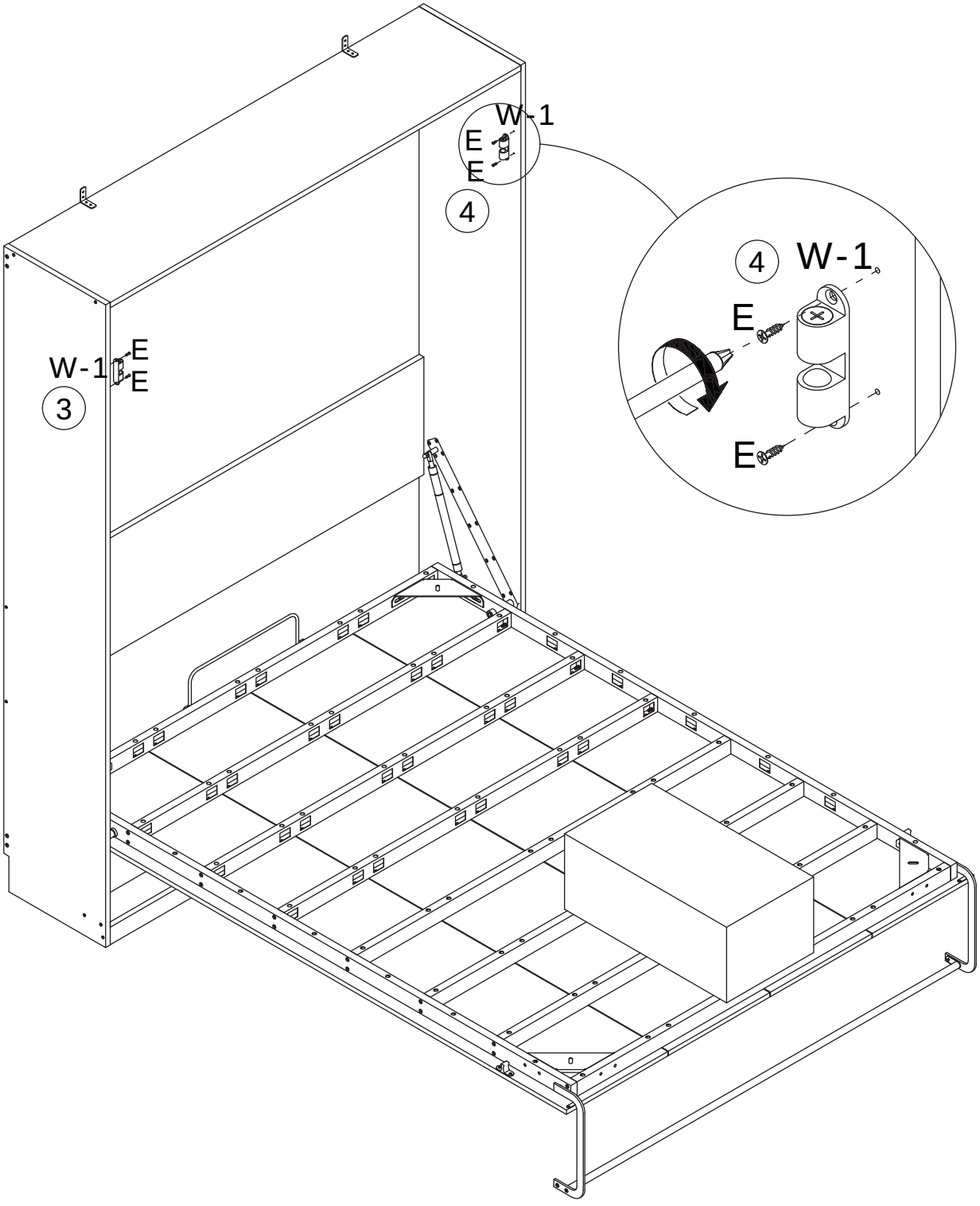

36

Y x 2

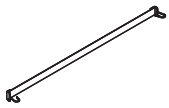

Use strap (Y) to secure the mattress to the bed frame.

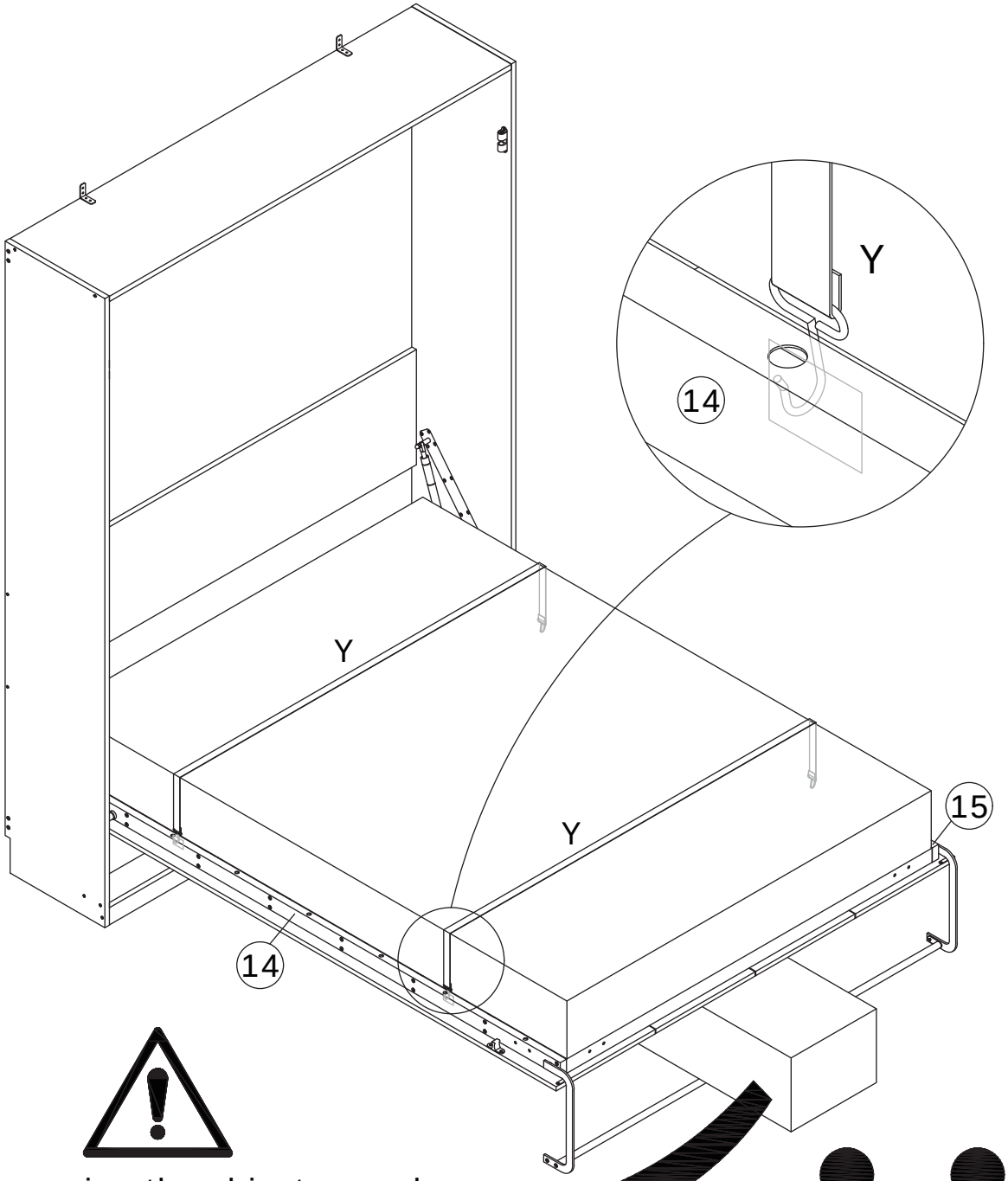

When moving the object, guard against the rebound of the bed frame.

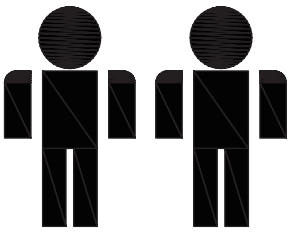

2 ADULTS

37

Fold down the bed frame.

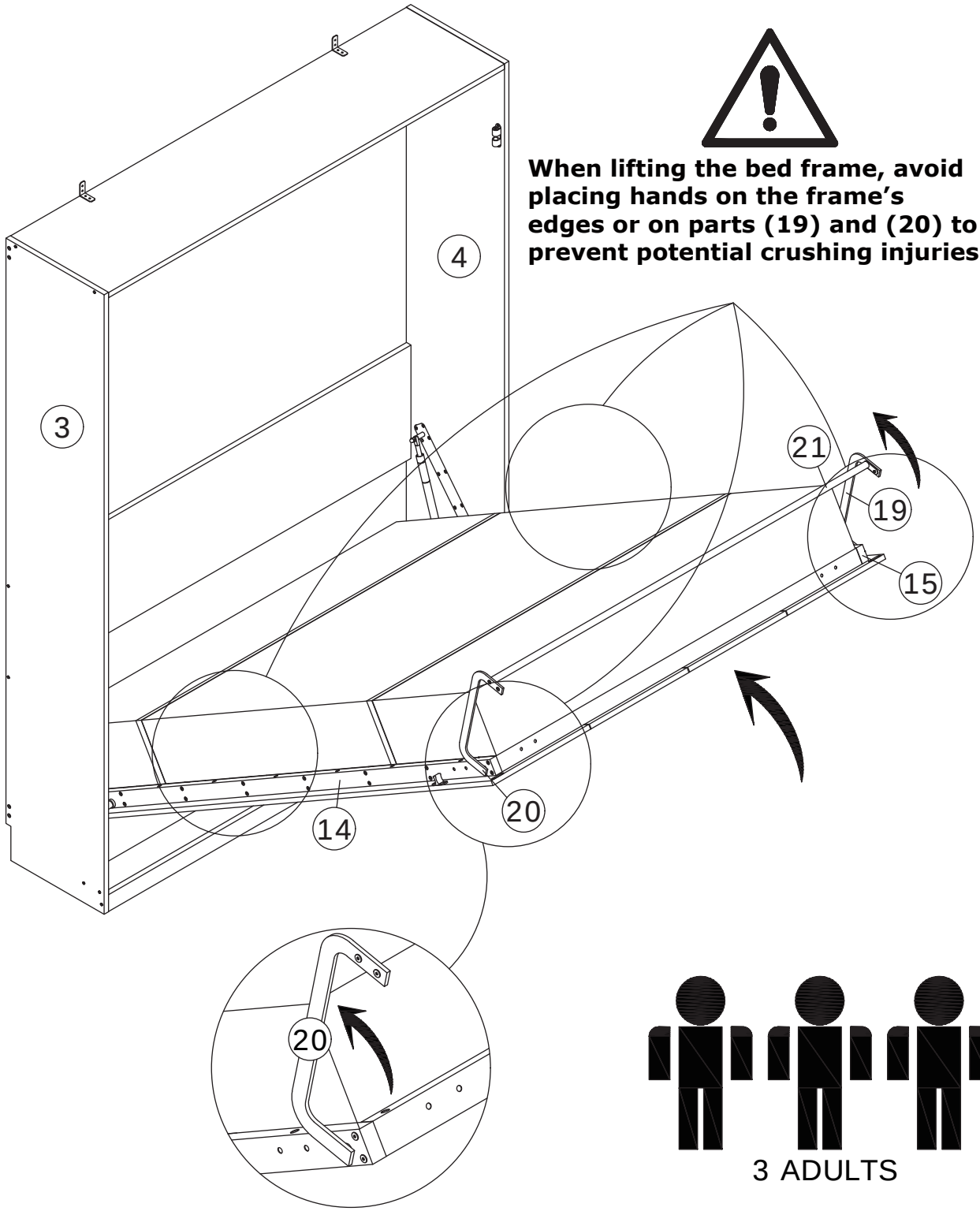

When lifting the bed frame, avoid placing hands on the frame's edges or on parts (19) and (20) to prevent potential crushing injuries

3 ADULTS

38

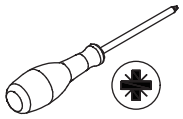

If the door panel fails to close tightly when being shut, you may pull the door panel open to a proper angle and adjust the part (W-1). Beware of pinching hands caused by door panel rebound.

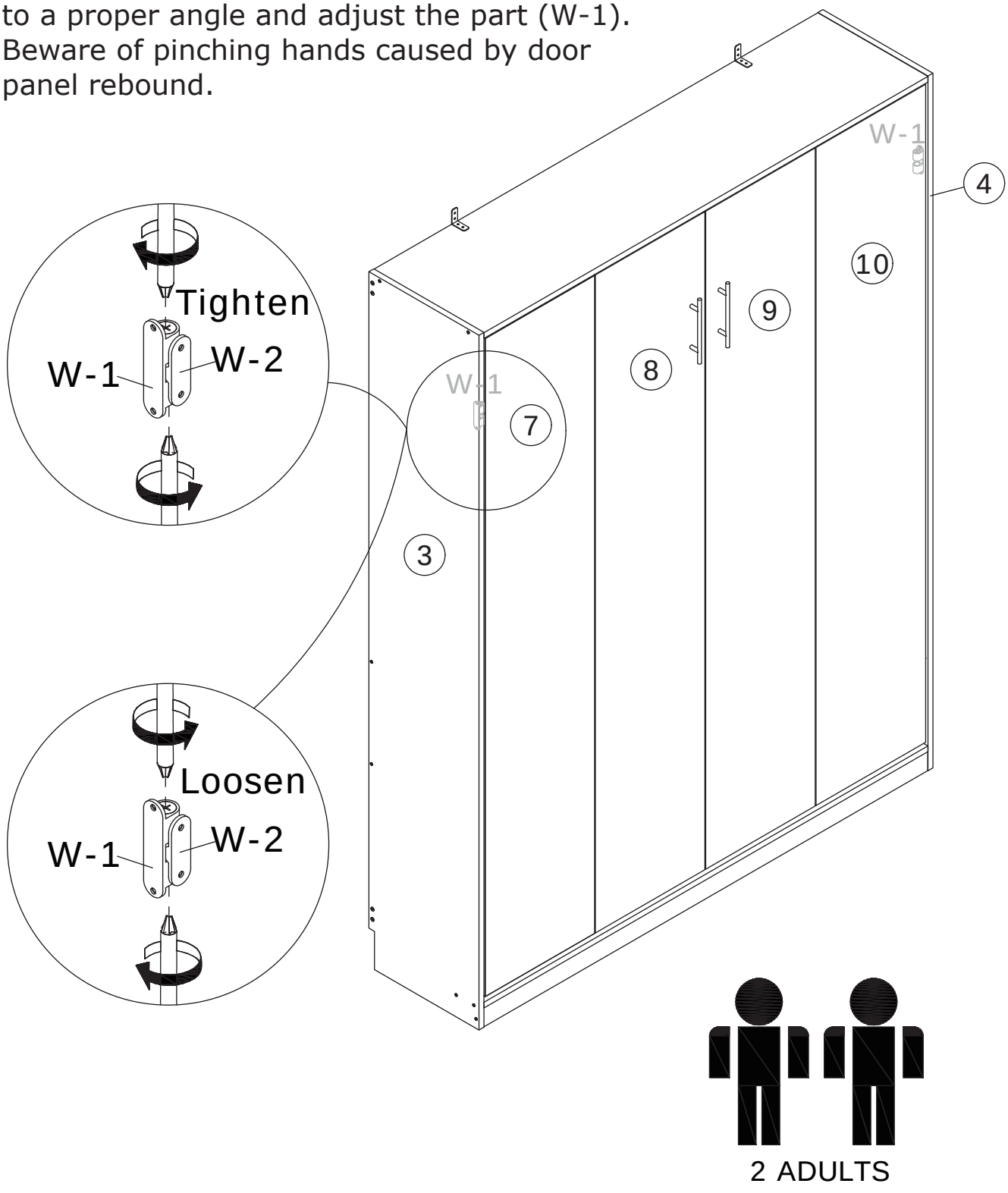

2 ADULTS

WARRANTY

WARRANTY CLAIMS

•There is a 30-day warranty for broken furniture or any other problems that do not work properly. The warranty will start from the date of purchase which must be verified by proof of purchase.

•Before making a claim, we may be able to answer your query, simply call us. Please leave your purchase order number, along with some details of the problem, if you want a replacement part. We will arrange within 48 hours. If there is out of stock, we will reply with a shipping date.

•The product must be used in accordance with the instructions provided. For health reasons.

•For other reasons, if the furniture needs to be returned, it must be cleaned and dried and operated within 30 days of receipt.

Type of Warranty Claim

•Failure to follow the furniture instructions will invalidate the warranty. Attention please.

•Does not include damage during installation, but includes damage during transportation.

Scope of responsibility

•Shall not bear any responsibility for misuse or user damage and / or loss of parts during the installation of furniture.

•After using, the damage and scratches of the furniture are not covered by the warranty.

The Warranty Relates to All Bought in The Us and Covers The Following Areas

•Sheet parts: 1 month from the date of purchase.

•Electrical parts: 1 month from the date of purchase.

RETURNS

CHANGED YOUR MIND AND NEED TO RETURN YOU ITEM?

PLEASE FOLLOW THE BELOW INSTRUCTIONS:

- If you have purchased and have simply changed your mind, follow the retailer's instructions for returns.

DEFECTIVE ITEMS

- If your item is defective in any way, i.e. it doesn't work but you can't identify why, in the first instance, please call us.

DAMAGED ITEMS

- If you receive an order with obvious shipping damage from the retailer, then we suggest the delivery is refused. If the delivery has been accepted and then shipping damage is found, please follow the specific instructions advised by the retailer.
  In all circumstances please save all packaging material and paperwork for the order. Please be aware that if you dispose of packaging material or attempt to return the merchandise without contacting the fulfiller, you jeopardise your chances of making a claim, and you may not receive a credit for the return.

AFTER-SALES CONTACT


adelahu@fufugaga.com


208-820-0068