Dining Chair

Assembly Guide



IMPORTANT: please read these instructions fully before starting assembly



SAFETY AND CARE ADVICE



NO POWER TOOLS

- Check you have all the components and tools listed
- Remove all fittings from their bags and separate into groups
- We do not recommend use of power tools - this could damage the unit. Only use hand screwdrivers and Allen keys
- Keep children and animals away from the work area, small parts could cause choking if swallowed
- Make sure you have enough space to lay out the parts before starting
- Assemble the item as close to its final position (same room) as possible
- Do not over tighten the nuts to avoid damage to the threads
- Only clean using a damp cloth and mild detergent. Do not use bleach or abrasive cleaners
- Do not allow children to climb or play on this product
- From time to time, check there are no loose screws in this unit
- This product should not be discarded with household waste. Take to your local authority waste disposal centre
- Unless otherwise stated, this product is designed for domestic use and is not certified for commercial or contract settings.

IMPORTANT INFORMATION

20 Minute Build

Two Person Build

Max Weight Capacity 120kg

Note: Assembly estimates are approximate and can differ based on the specific environment and user experience.

Label	Part Name	Drawing	Quantity
1	Front Leg Frame		1
2	Back Leg Frame		1
3	Seat		1

Please note, the fixings above are for a single chair.

WHAT'S IN THE BOX

Note: the quantities are the correct amount to complete the assembly. In some cases more fixings may be supplied than are required.

Label	Part Name	Drawing	Size (mm)	Quantity
A	Metal Washer		M8 x 18	10
B	Allen Screw		M6 x 18	4
C	Allen Screw		M8 x 45	3
D	Nut		M8	3
E	Allen Key		M5	1
F	Box Spanner		M8	1
G	Spring Washer		M8	7

Please note, the fixings above are for a single chair.

Note:

- Use a clear, flat surface to avoid bumps or scratches before assembling.
- Insert all fixings loosely at first to allow for alignment; only tighten them once everything is properly positioned, as some adjustment may be required.
- Avoid over-tightening, as this may damage the parts.
- Seek assistance when moving large or heavy parts

STEP 1

Connect the 2x leg frames together [1 +2]. Secure using 3x metal washer [A] followed by 3x screw [C] on the front side of the legs [1]. Secure on the rear side legs [2] using 3x metal washer [A], 3x spring washer [G] and 3x nut [D]. To allow for alignment, partially tighten the fixings with Allen key [E] and box spanner [F]

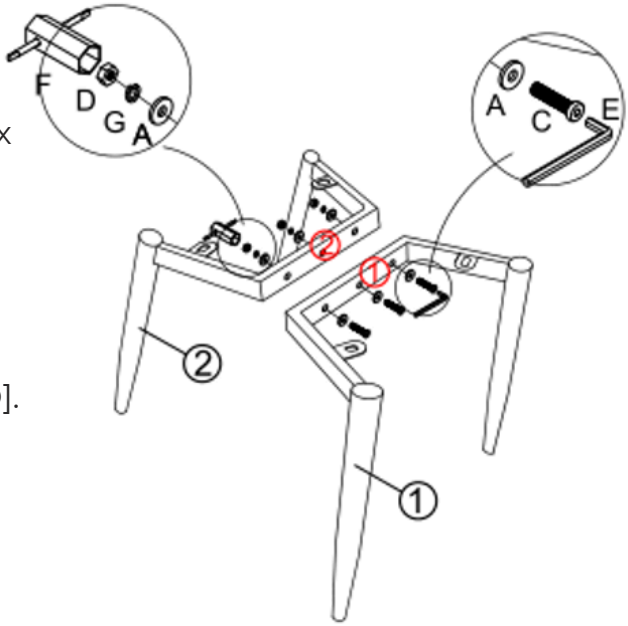

NOTE: Insert ALL screws loosely, only fully tighten when instructed to do so. In the event of miss-alignment or chair wobbling, please untighten screws, realign and re-tighten.

STEP 2

Align the legs [1 +2] to the chair seat [3].
Align the tabs on the leg frame with the holes in the chair seat and secure using 4x metal washer [A], 4x spring washer [G] and 4x Allen screw [B].
To allow for alignment, partially tighten the fixings with Allen key [E]

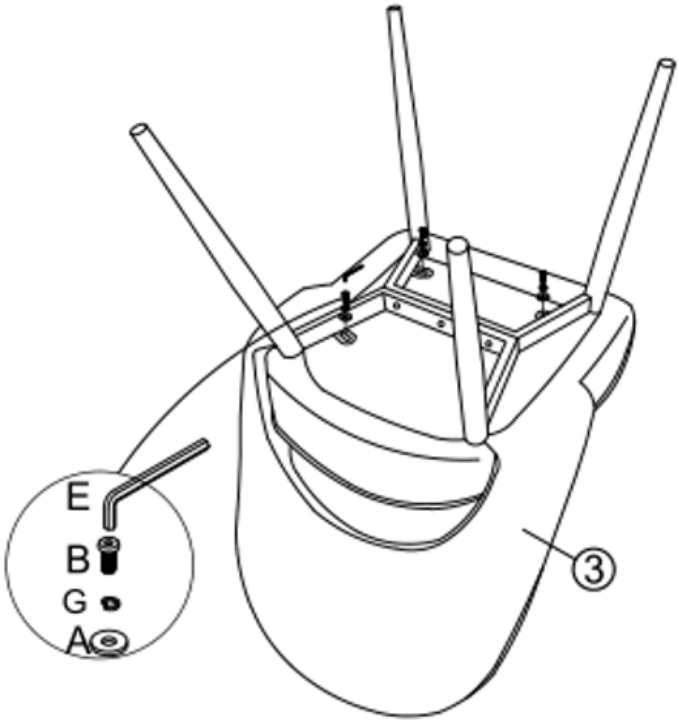

STEP 3

Carefully, turn your chair over to stand on the feet.
Apply weight to the chair to allow the legs to level.
Fully tighten All fixings.

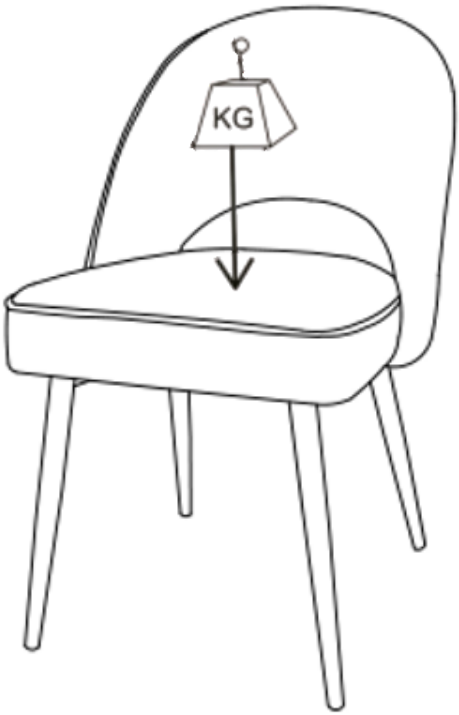

STEP 4

Check the stability.
Your Chair is now ready to use!

STEP 5

Repeat the assembly process for any subsequent chairs.

Please ensure any and all fixings and fittings are FULLY tightened before using this product

our 2 year GUARANTEE

Our products come with a 2 year guarantee, giving you extra peace of mind when shopping with us!

What the guarantee covers

PRE-INSERTED FIXINGS
e.g. loose metal threads

FAULTY JOINTS
e.g. legs bending

EXTERNAL FIXING FAULTS
e.g. metal discs removing from table top

STRUCTURAL INTEGRITY
e.g. the frame of the product