ASSEMBLING INSTRUCTION

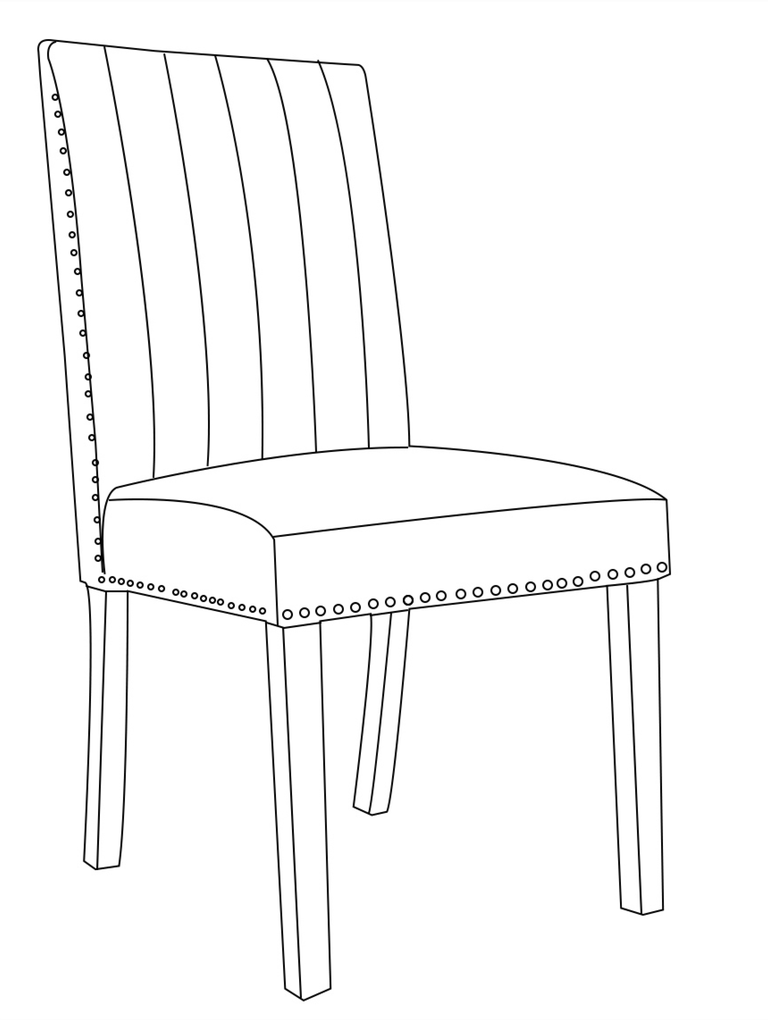

HARDWARE LIST

CODE	PARTS	QTY.
A	M8x70MM	9
B	ALLEN KEY	1

1

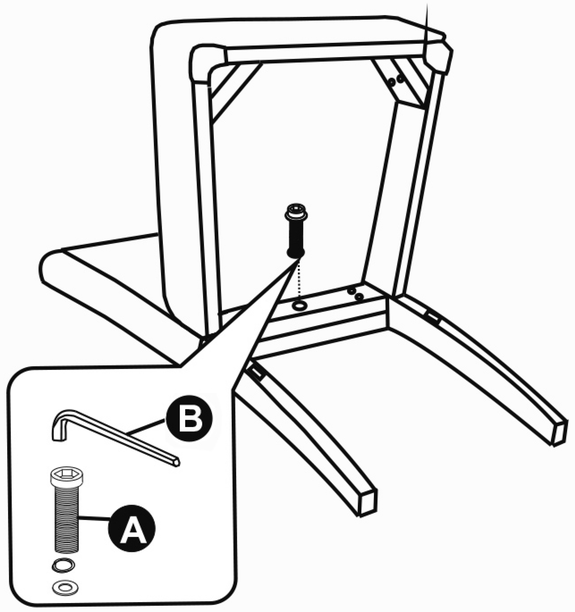

Put the bolts in the holes, tight the bolts, but not too tight, 80% is ok.

2

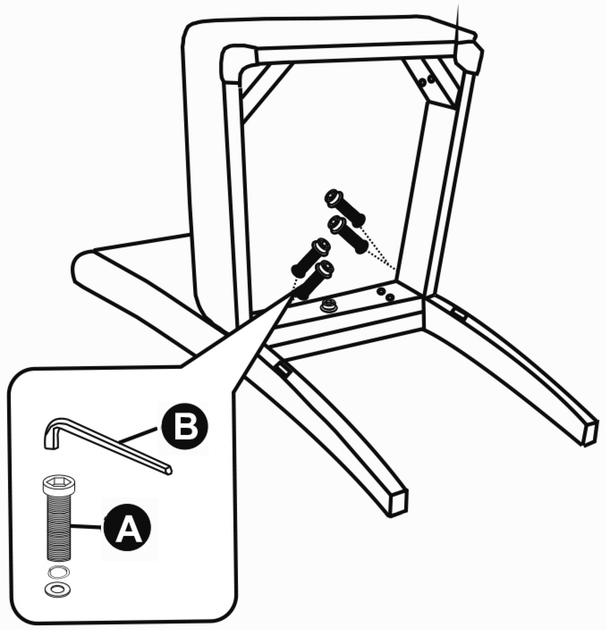

Put the bolts in the holes, tight the bolts, but not too tight, 80% is ok.

3

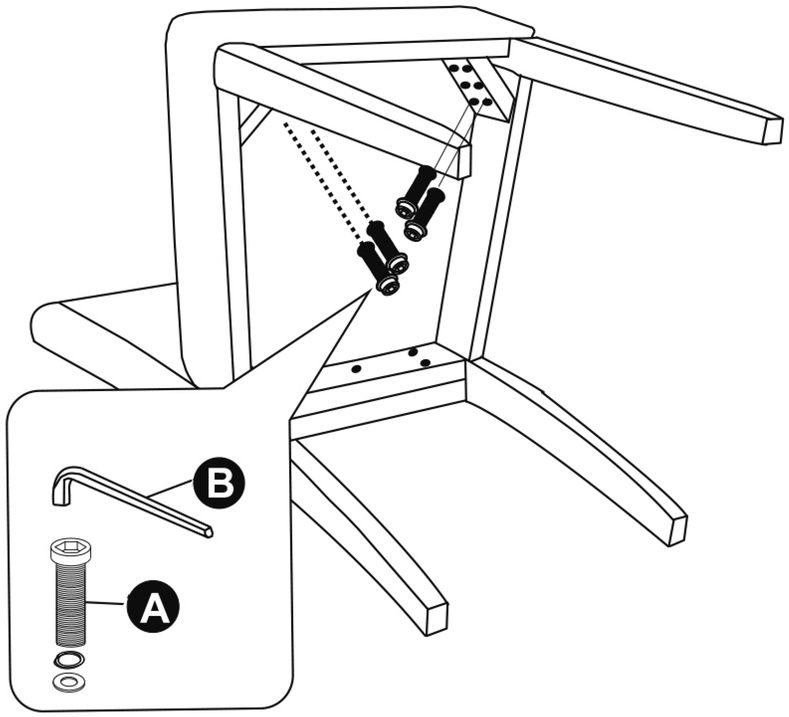

Put the bolts in the holes, tight the bolts, but not too tight, 80% is ok.

4

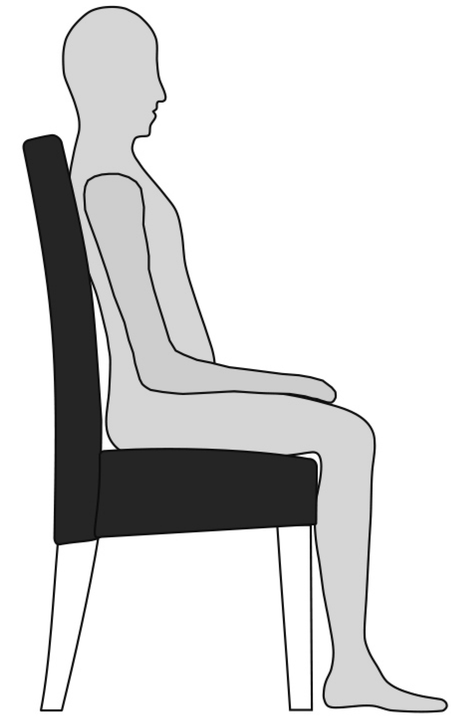

Then adjust the balance of the chair.

5

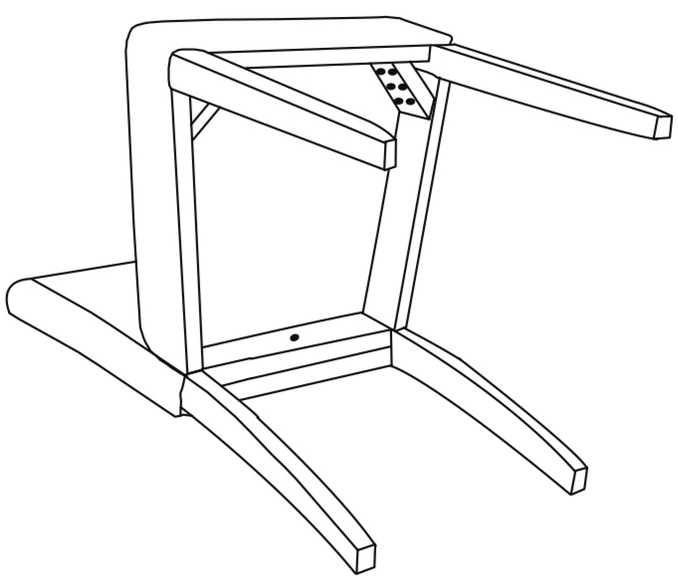

Tight all the bolts to 100%

6

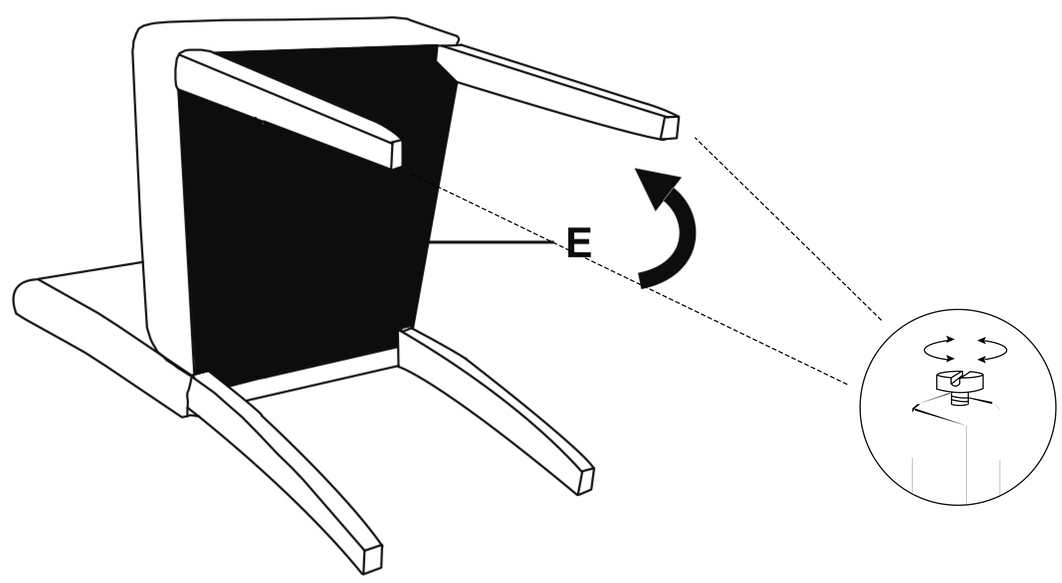

Stick the black cover under the seat