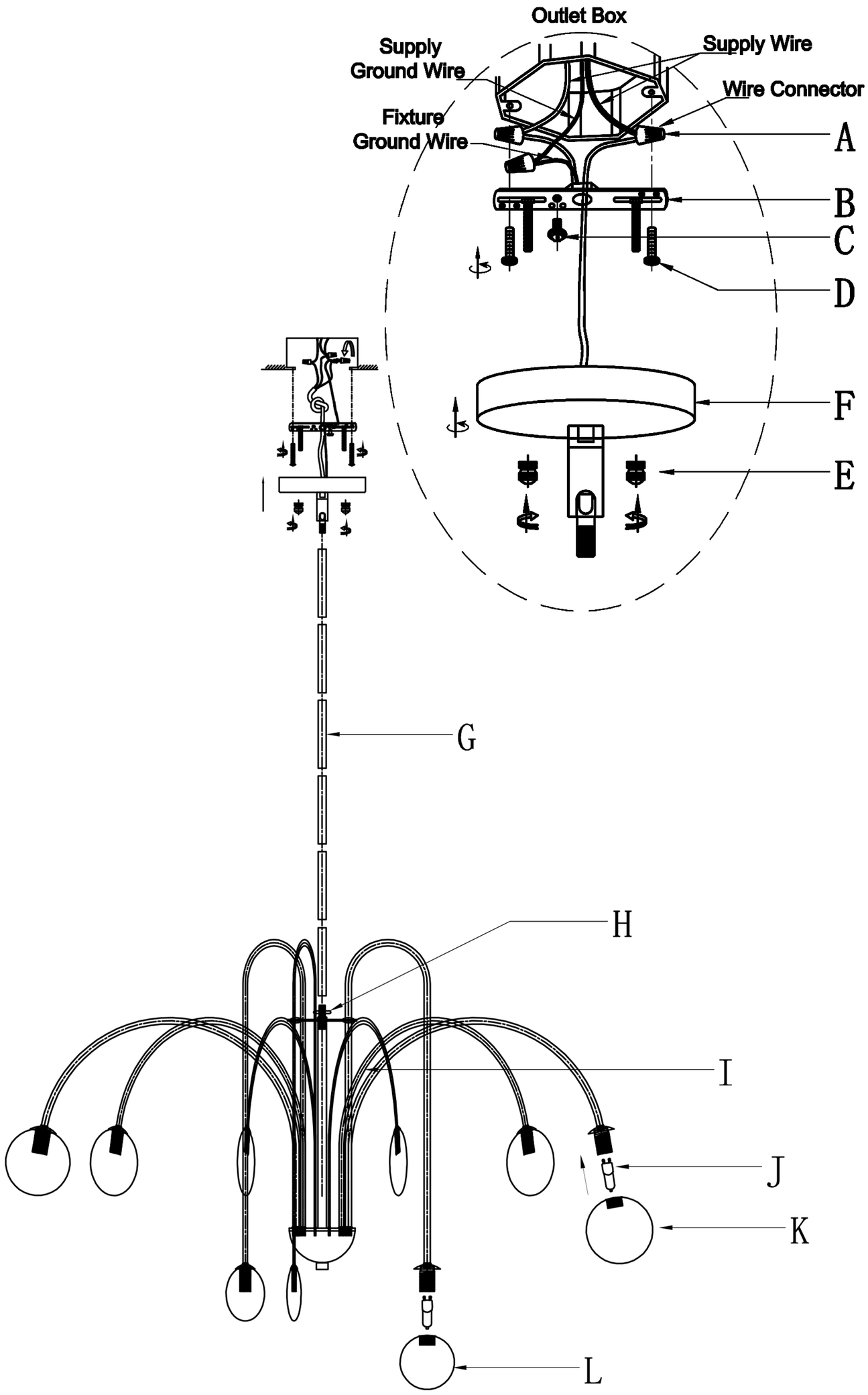

Installation Steps:

Step 1: Open the folding bends (6 big arms and 3 small arms) on the light frame (I), respectively, evenly spaced.
Step 2: Sleeve the flat cover (H) onto the light frame (I), and then connect and fix the iron pipes (G) in turn, and then rotate and fix the canopy(F) onto the iron pipes (G).
Step 3: Lock the mounting plate (B) to the junction box with screws (D), connect the lamp body wires and power cables together with the junction cap (A), and then fix the ground wire with the ground wire green screws.
Step 4: Fix the canopy (F) to the ceiling with nuts (E).
Step 5: Insert the bulbs (J) (bulbs not included), then rotate the large glass shade (K) and small glass shade (L) to the designated lamp head in turn.

Accessories:

A: Wiring Cap*3	
B: Mounting Plate*1	
C: Screws*1	
D: Screws*4	
E: Nut*2	
F: Canopy*1	
G: Iron pipe*6	
H: Flat Cover*1	
I: Light Frame*1	
K: Large Glass Shade*6	
L: Small Glass Shade*3	

Notice: This light fixture should be installed in accordance with all applicable, local installation codes, and by a person familiar with the construction and operation of it, as well as the hazards involved. Inspect items and contents carefully. If any damage or defect is found, do not install it.