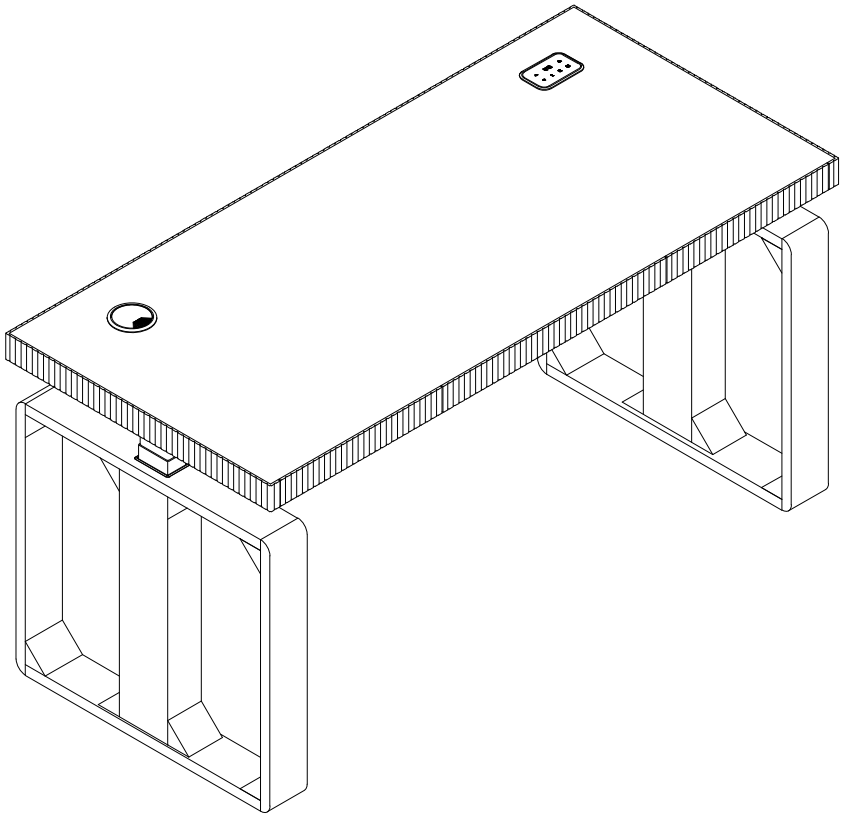

ITEM NO.Z6DKBO0852

Thank you for purchasing the Standing Desk.

Please read the instructions and warnings carefully before use, to ensure safe and satisfactory operation of this product. At HULALA home we are committed to making great products possible. From our in-house Design Team, to our Buyers, we work together to bring great designs to life. Our expert Product Technologists work collaboratively with our buyers and suppliers to assure the legality, safety and quality of the product we sell. We are all committed to designing and developing products to the highest industry standards. We hope you are happy with your product and welcome any feedback or comments you may have.

Exploded Diagram

Z6DKBO0852

Carton A

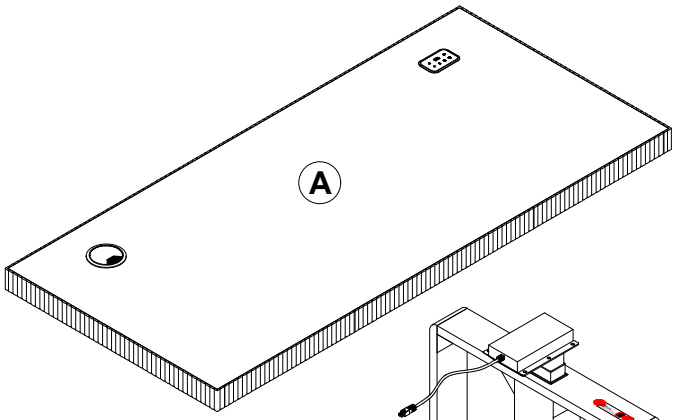

Carton B

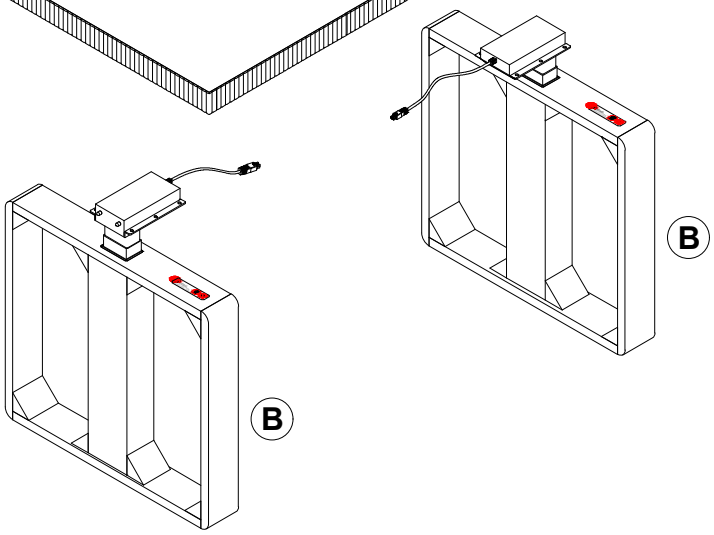



Two persons

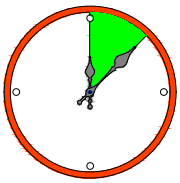

Around 20 min

HARDWARE LIST (in Carton A)

1 x 12 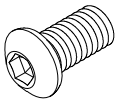 Bolt M6*12mm	**2** x 1 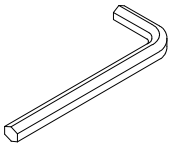 Allen Key 4#	

SPARE LIST

1 x 1 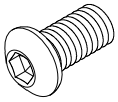 Bolt M6*12mm	Complimentary x 4 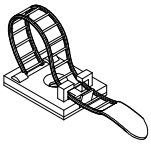 Cable Clip	Complimentary x 4  Flat Head Screw Ø3x12mm for Cable Clip

Be sure to check all packing material carefully for small parts, which may have come loose inside the carton during shipment.

STEP 1

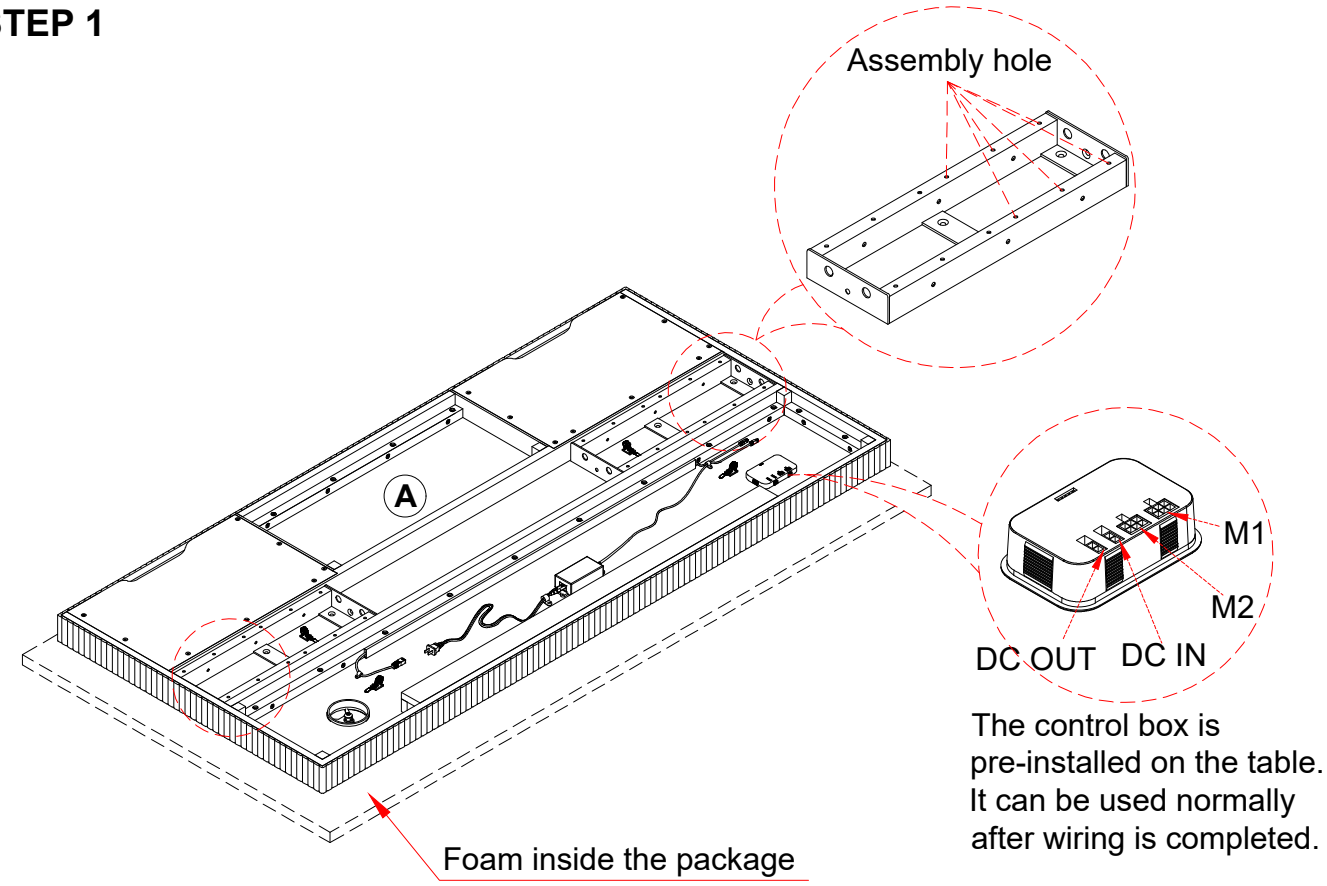

The control box is pre-installed on the table. It can be used normally after wiring is completed.

Place the foam from the packaging under the table top to protect it from damage during installation.

STEP 2

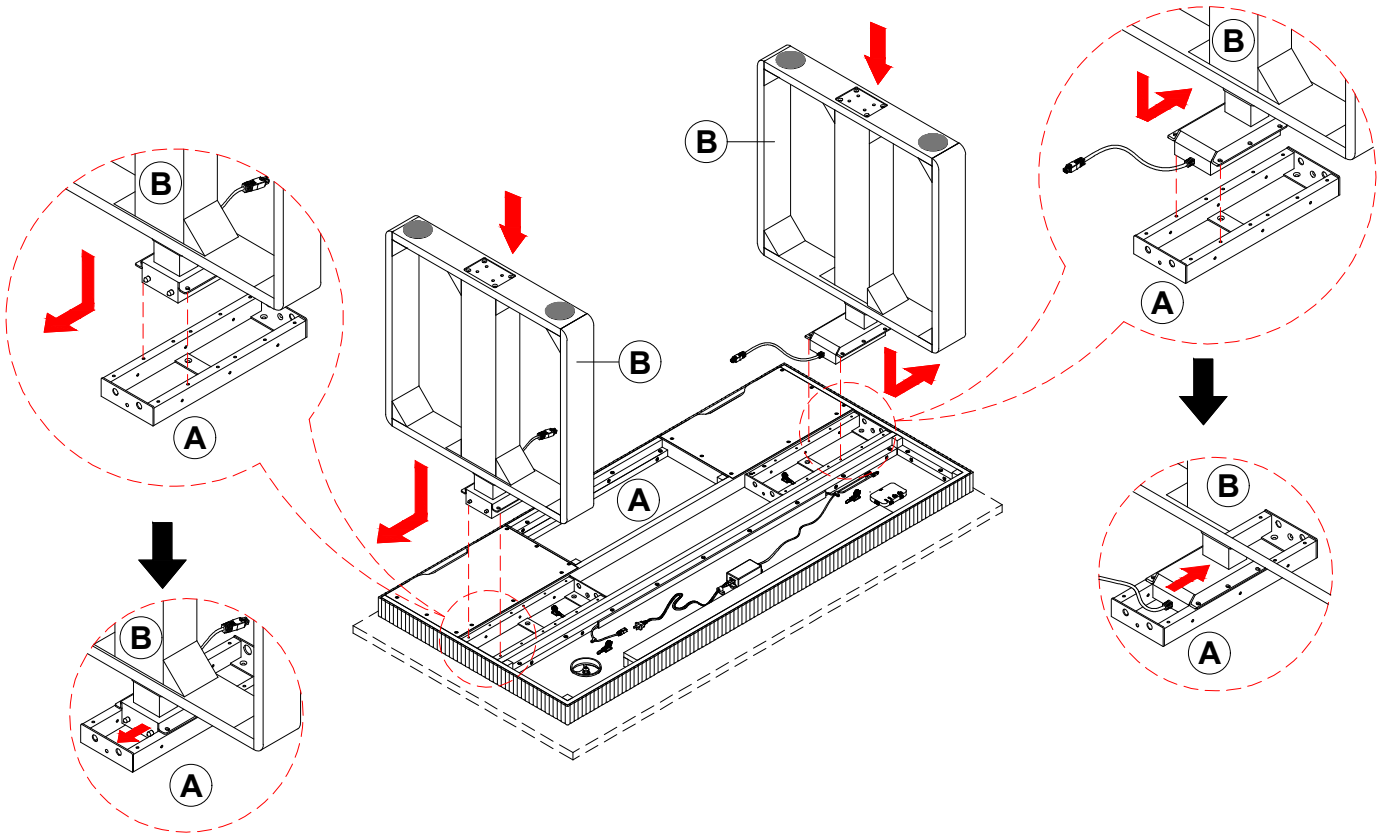

Put Foot into the bottom of table and carefully slide it to both sides respectively until it is completely aligned on both sides.

STEP 3

1		x 8
2		x 1

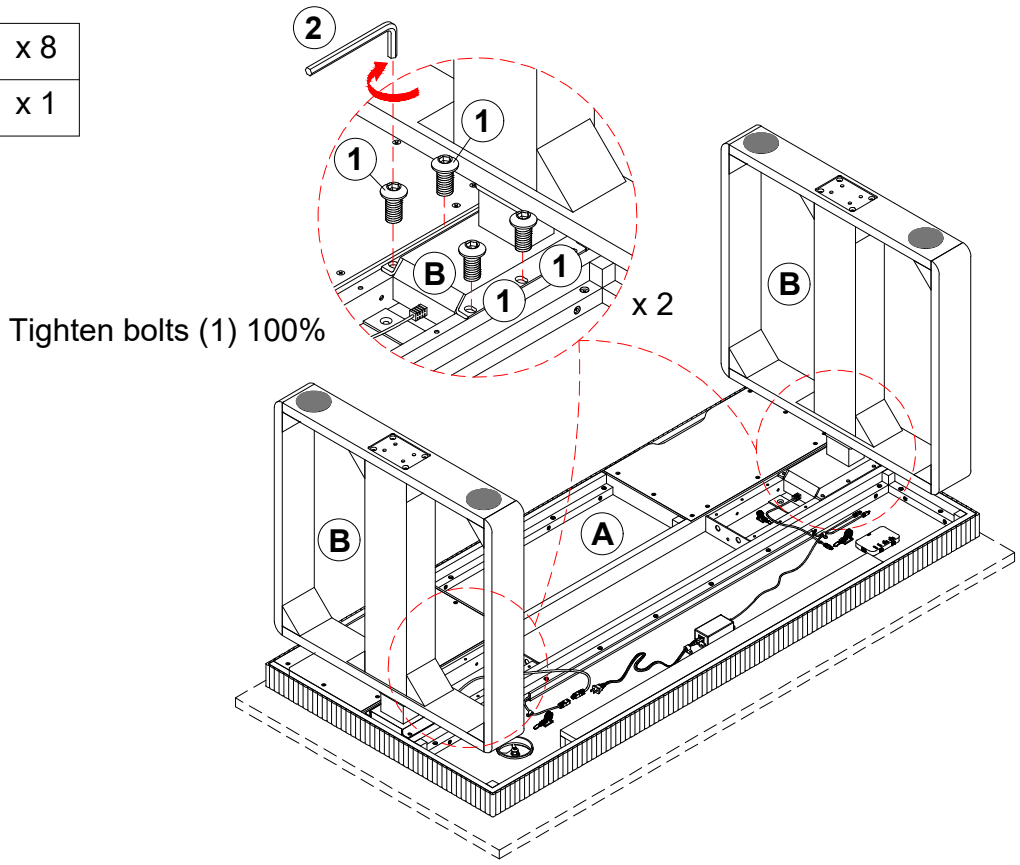

Tighten bolts (1) 100%

Use the Allen Key (2) to tighten bolts (1) to approximately .

STEP 4

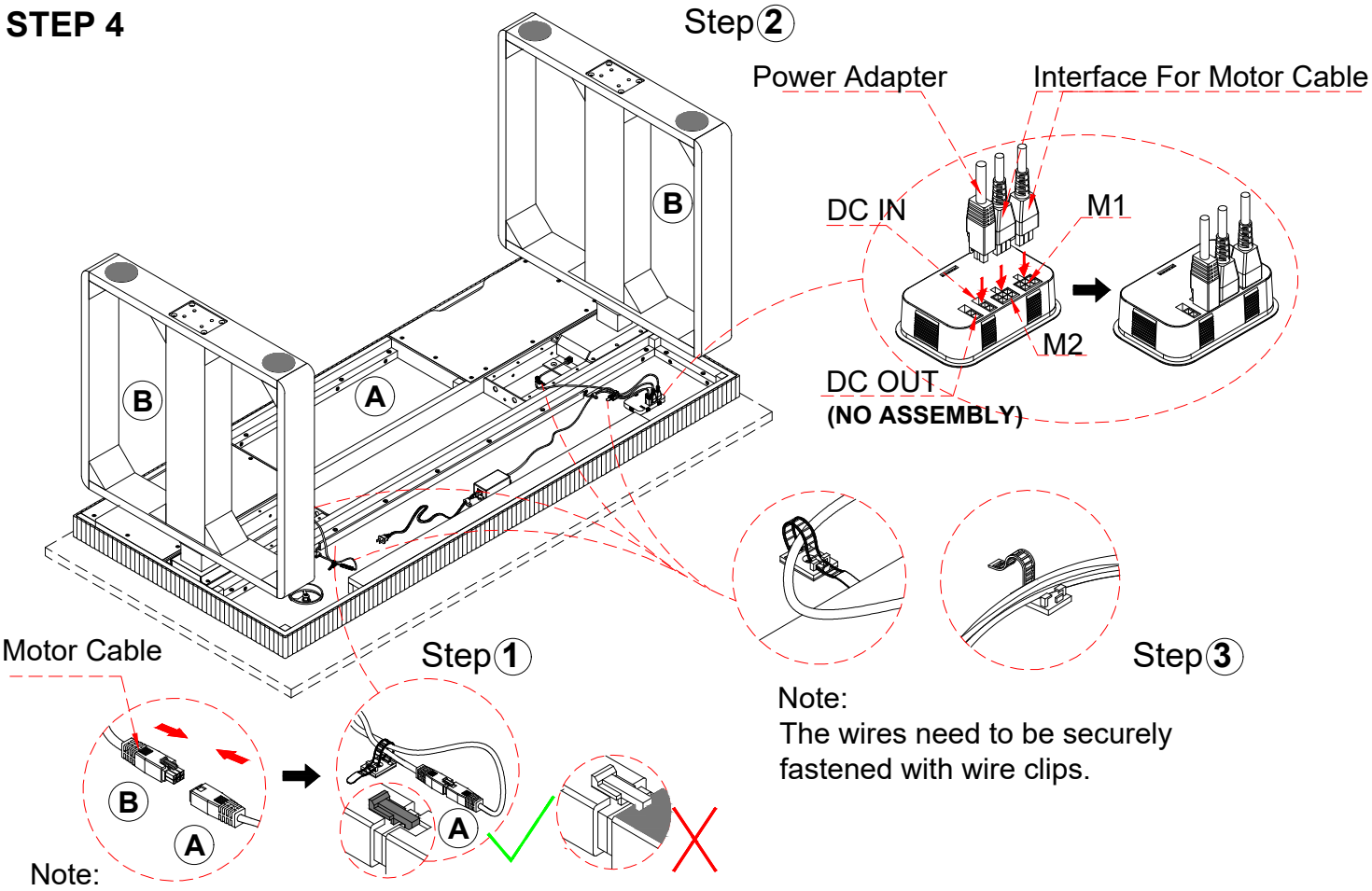

Note:
The wires need to be securely fastened with wire clips.

Note:
Please note that the connector here must not be incorrect.

STEP 5

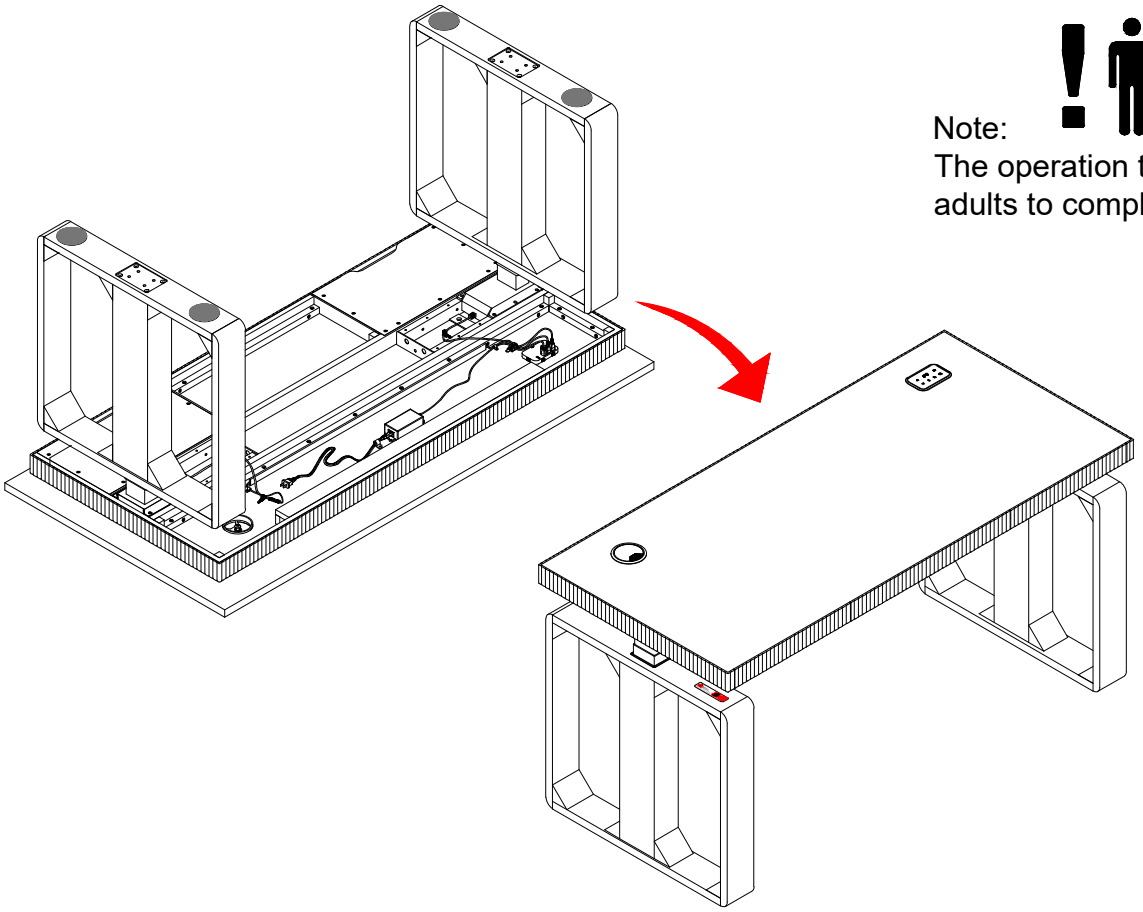

Note:
The operation takes two adults to complete.

Flip the table to upright position,as shown.

STEP 6

1		x 4

After raising the tabletop, tighten all bolts from underneath.

STEP 7

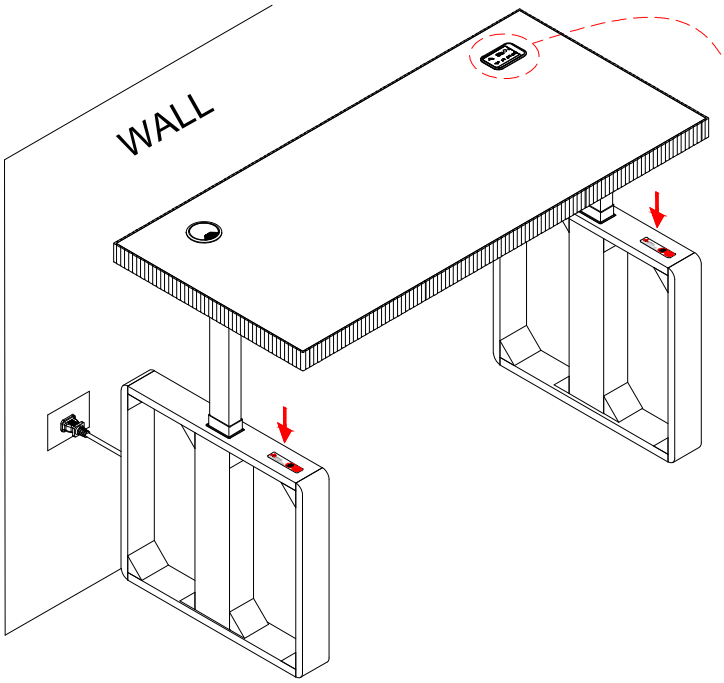

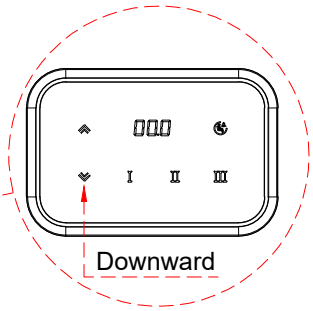

For details, refer to the Controller Manual.

WARNING:
Do not place hands or objects on top to prevent injury or danger!



CAUTION:
The sound you hear when activating the lifting function is normal and is caused by the high speed of the motor.

WARNING:
1.The load of the lifting table must be less than 200 LBS!
2.When raising or lowering the tabletop, ensure that the tabletop remains stationary and does not move!

OPTION

Does not include the monitor bracket.

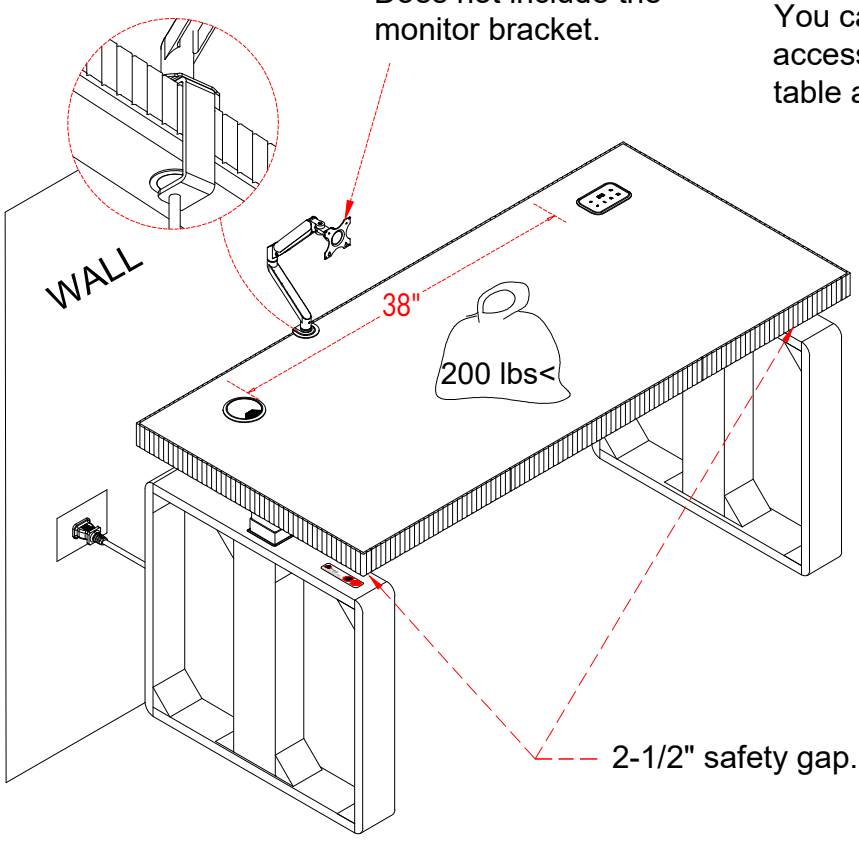

Option:
You can choose to add installation accessory cable clips on the back of the table according to your preferences.

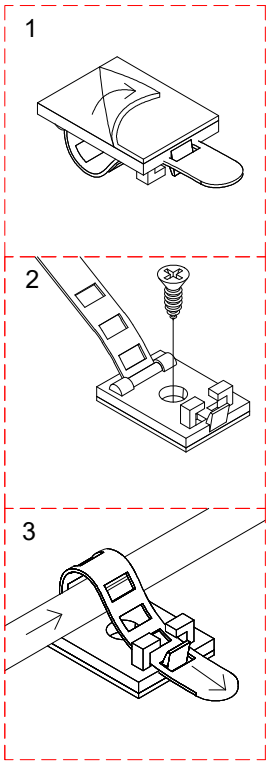

MAINTAINANCE AND WARNING 

- Keep furniture away from heat.
- Do not clean furniture with harsh cleansers or polish. Do not use detergents, Solvents, abrasives, spray packs or leather cleaner. Use non-color mild soap with warm water clean spills(Mix 1:10 soap to water)
- Do not place furniture under direct sunlight, material will possibly fade over time.
- Do not use on site dry Cleaning machine.
- Children should not climb or jump on the furniture.
- Do not write on furniture without a padded barrier to protect the surface.
- Not for commercial use, For residential use only.
- The maximum load is 200 LBS.

WARRANTY

We strive to offer high ¸ quality products, and we also try our best to satisfy each and every customer that orders from us with product or service as needed. We provide 30 days warranty starting from the time you receive the item. Each customer must provide a record of their order such as the order number, or item receipt for any items that are out of the warranty period you may also still receive replacement parts by purchasing them with our company if they are available.

Are you having difficulty with assembly? Missing parts? Please send email with your order No to customerservice@hulalahome.com

For return, please check the return policy with the retailer or market place you bought from. Appreciate your purchasing from us. Pop up your life by our furniture piece!