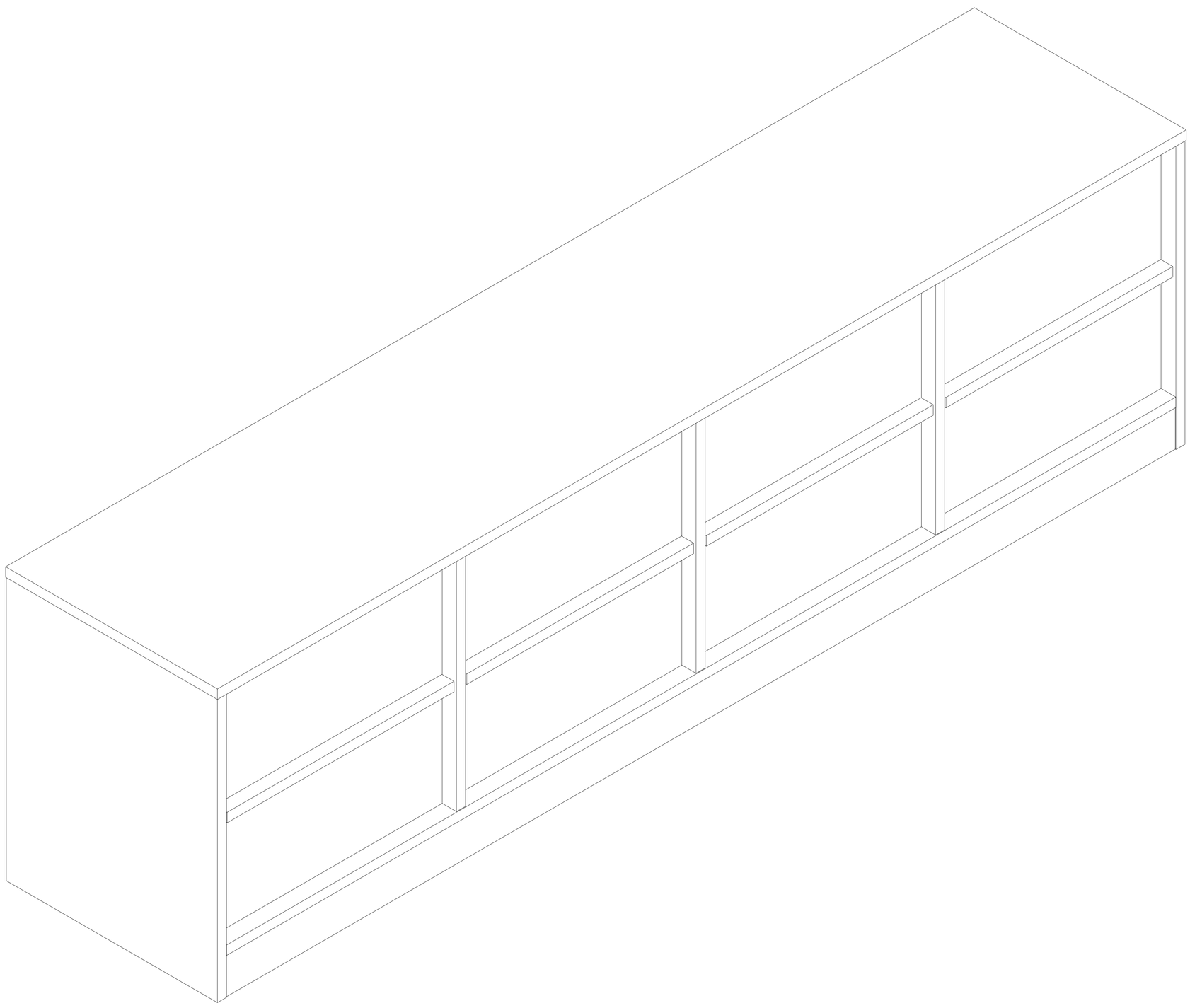

General Guidelines

- Please read the following instruction carefully and use the product accordingly.
- Please keep this manual and hand it over when you transfer the product.
- Please check that you have all the listed components and tools, before you start assembling the item.
- Assemble the item as close to its final position(in the same room) as possible.

Care and Maintanance

- The product is intended for indoor use only. The product must be assembled and used in accordance
- with the provisions of the manual.
- Avoid long-term exposure to humid environments to prevent mildew.
- Keep the product away from fire sources and high temperatures. Do not expose the product to direct sunlight.
- Do not place any hot objects on the surface of the product.

Warning ⚠

- Keep children and animals away from the work area, small parts could choke if swallowed.
- Children are not allowed to climb or stand on the product to avoid personal injury caused by the product tilting or tipping over.
- Please do not use the product if there is/are defective and/or missing part/s, as this can result in damage or injury.
- To avoid the potential dangers of suffocation, please keep all parts and packaging (film, plastic bags, foam, etc.) away from babies and children.

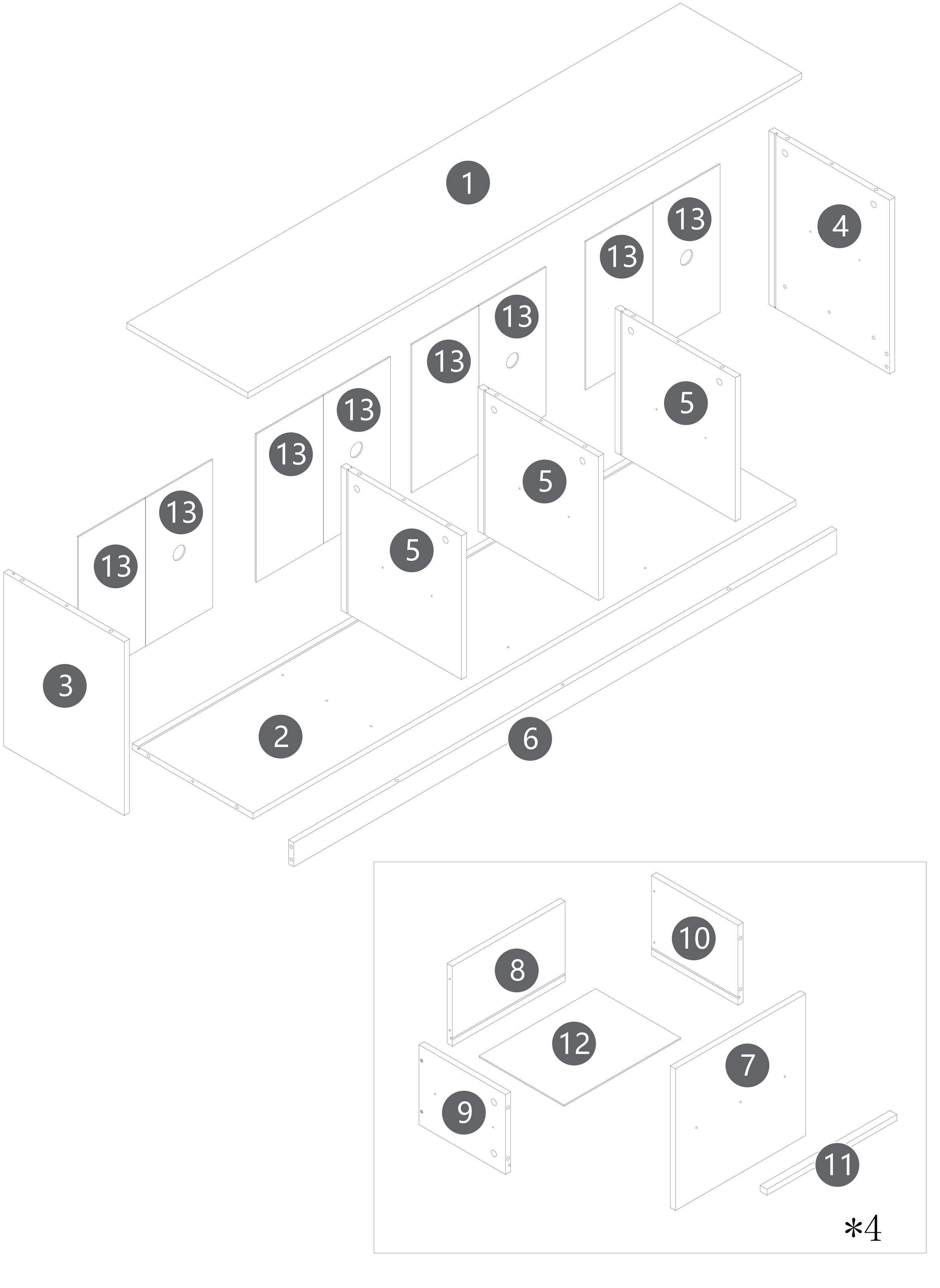
1
4
13
13
13
13
13
13
13
13
5
5
5
13
13
3
2
6
8
10
12
7
9
11
*4

1 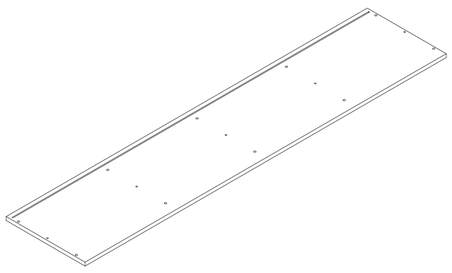 1601*350(mm) 63.03*13.78(inch) 1PC	2 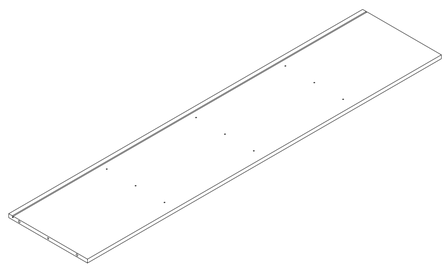 1569*349(mm) 61.77*13.74(inch) 1PC	3 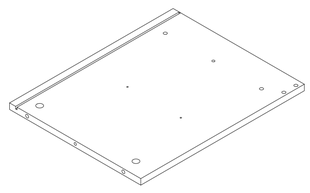 435*349(mm) 17.13*13.74(inch) 1PC	4 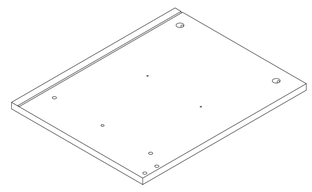 435*349(mm) 17.13*13.74(inch) 1PC	5 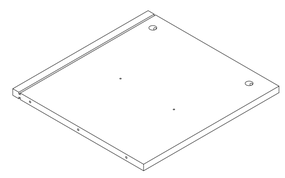 360*348(mm) 14.17*13.7(inch) 3PCS
6 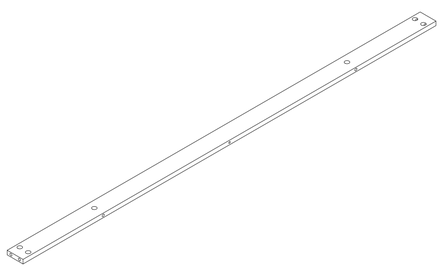 1569*20(mm) 61.77*0.79(inch) 1PC	7 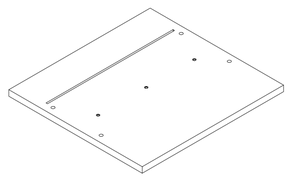 376*355(mm) 14.8*13.98(inch) 4PCS	8 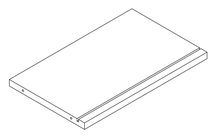 326*200(mm) 12.83*7.87(inch) 4PCS	9 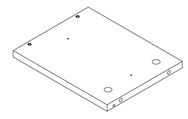 250*200(mm) 9.84*7.87(inch) 4PCS	10 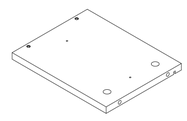 250*200(mm) 9.84*7.87(inch) 4PCS
11 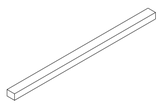 375*20(mm) 14.76*0.97(inch) 4PCS	12 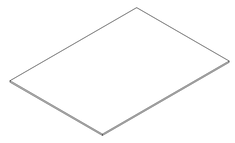 337*246(mm) 13.27*9.69(inch) 4PCS	13 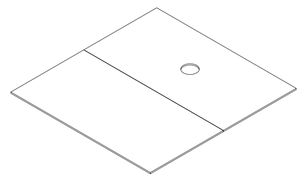 371*194(mm) 14.61*7.64(inch) 8PCS		

A 36x

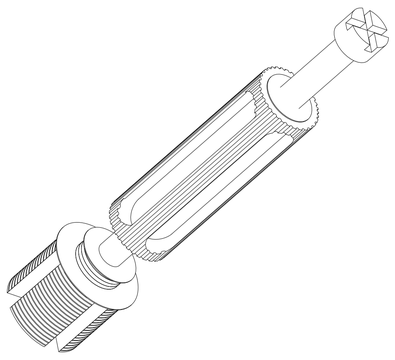

B 36x

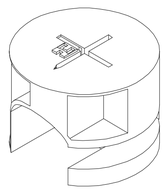

15x12mm

C 8x

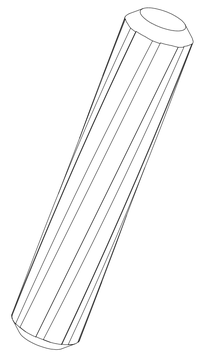

M8x40mm

D 9x

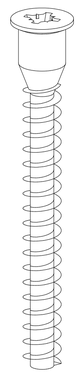

M7x50mm

E 16x

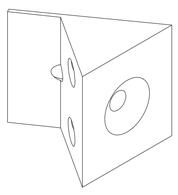

F 16x

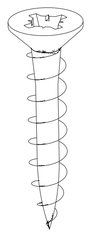

M3x12mm

G 32x

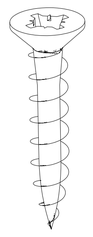

M3.5x14mm

H 16x

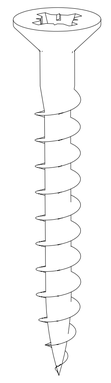

M3.5x35mm

I 12x

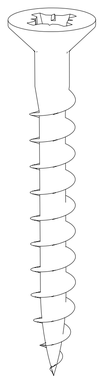

M3.5x25mm

J 16x

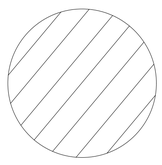

K 4x

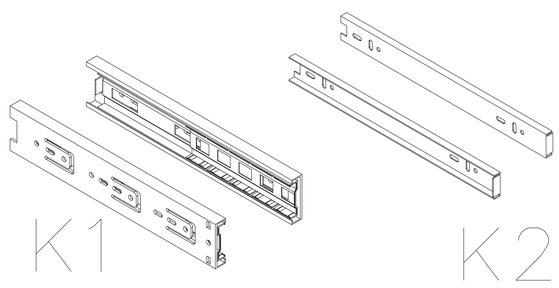

K1 K2

250mm

Hardware installation demonstration

NOTE:Please make sure "A"hardware tightened and can't be pulled out!

I

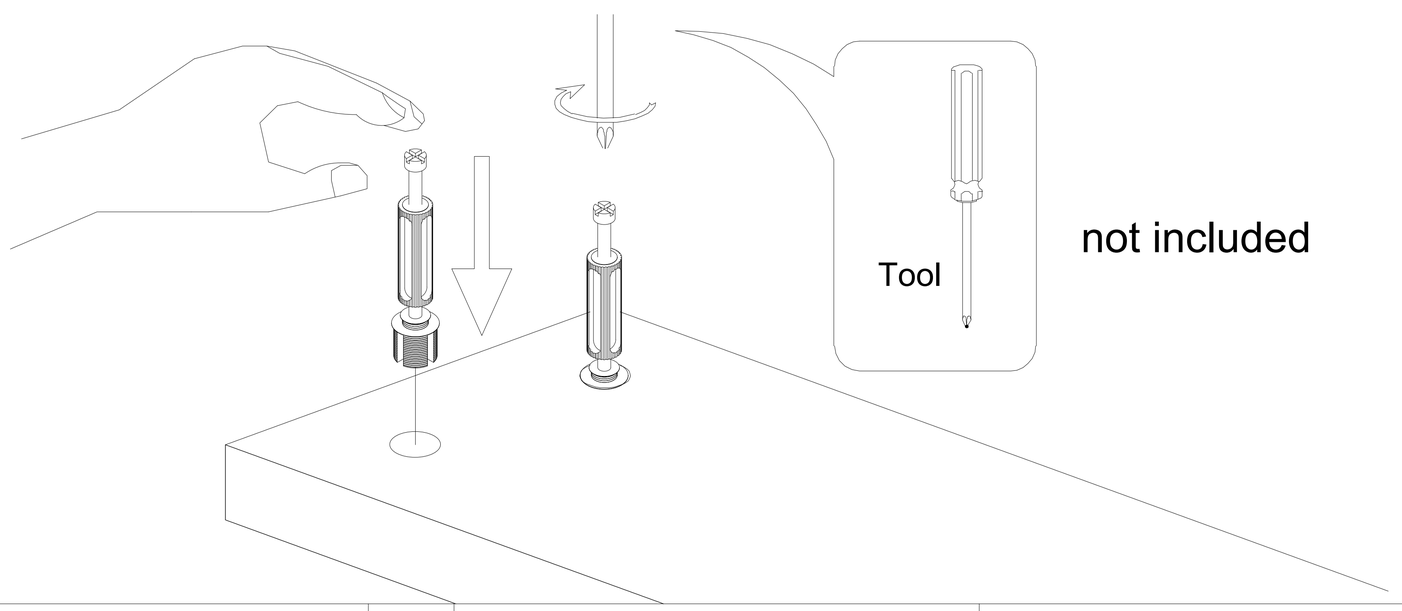

II

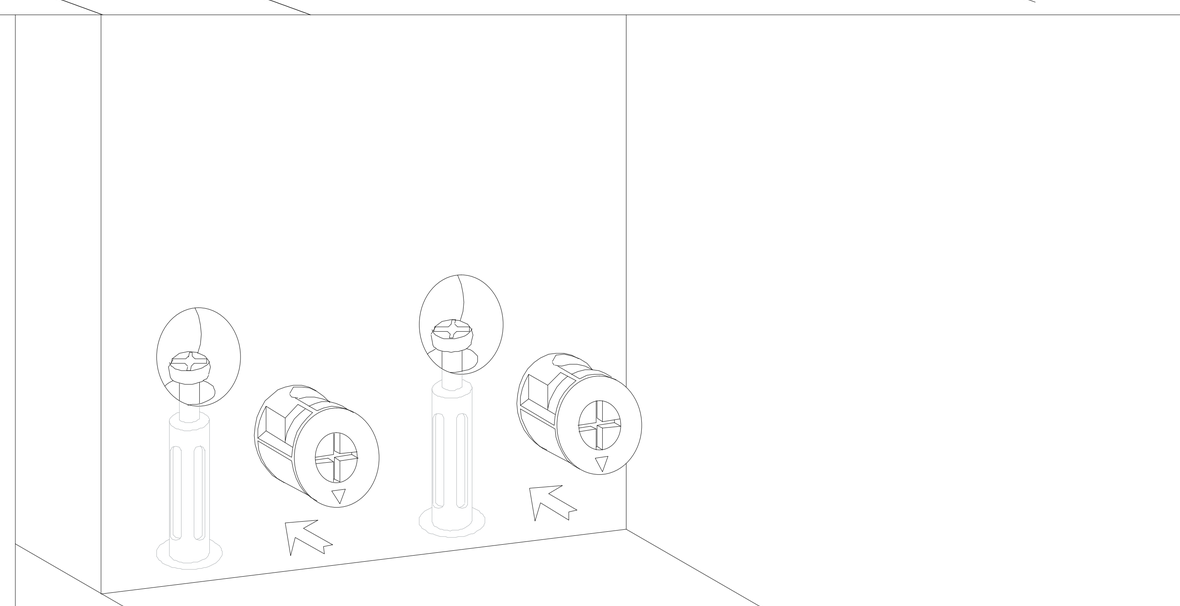

III

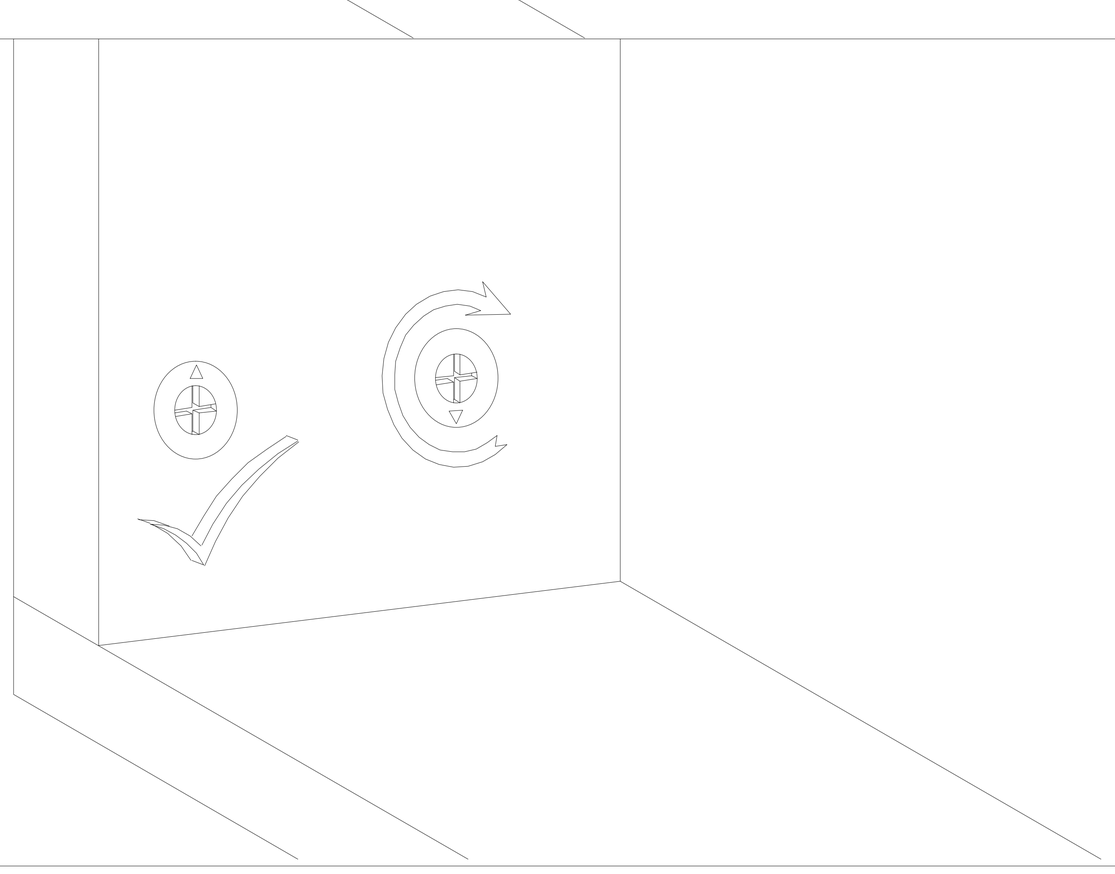

01

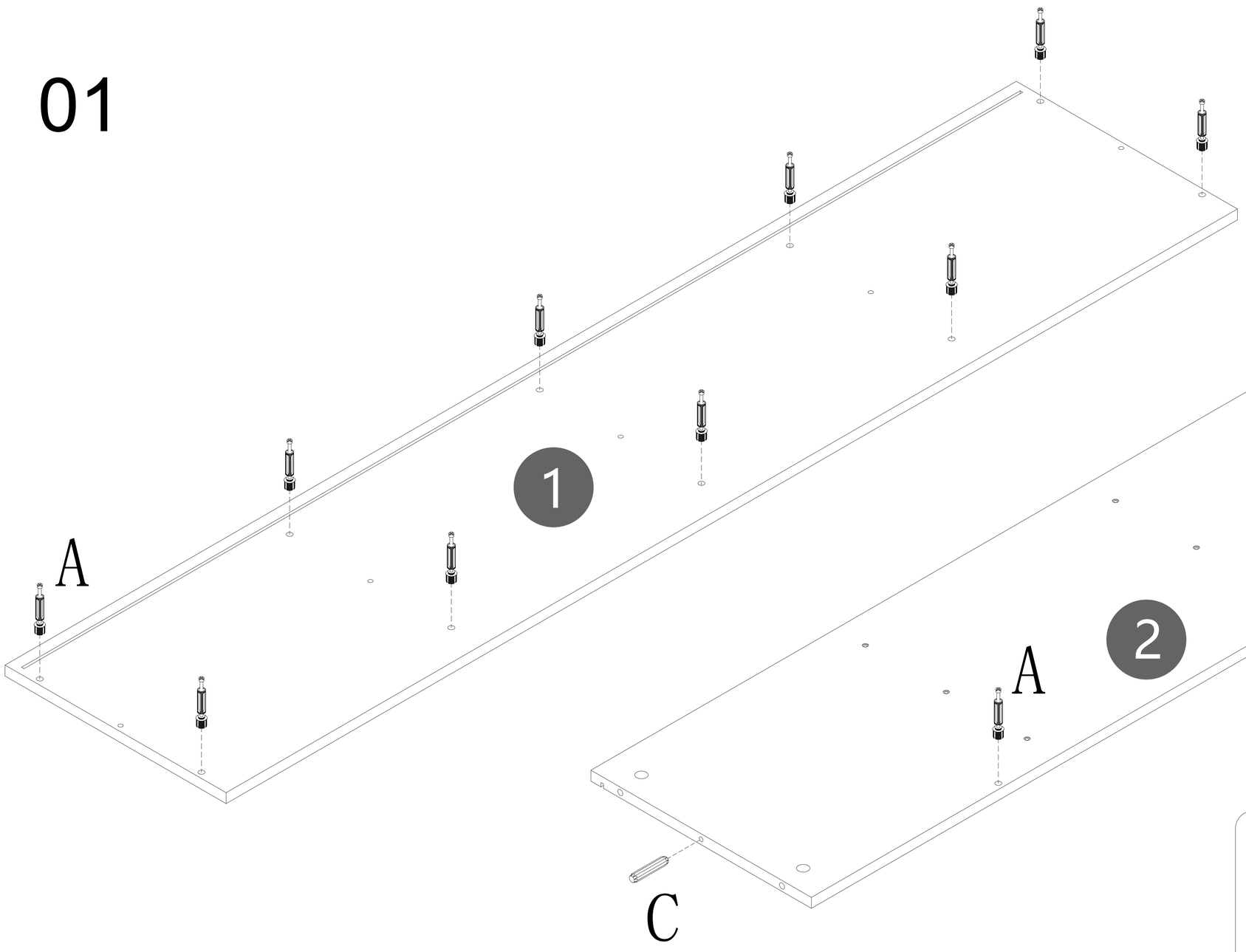

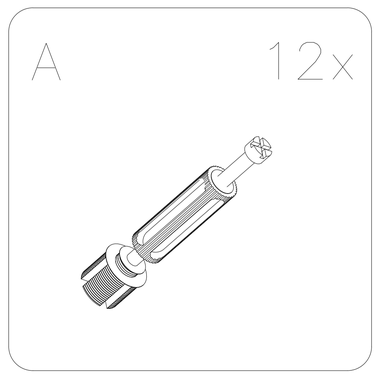

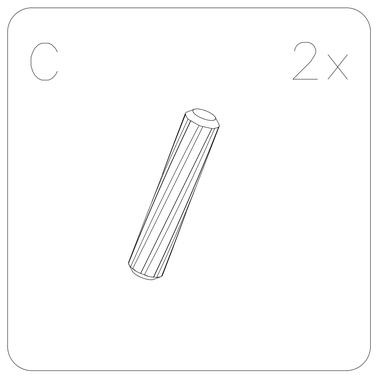

02

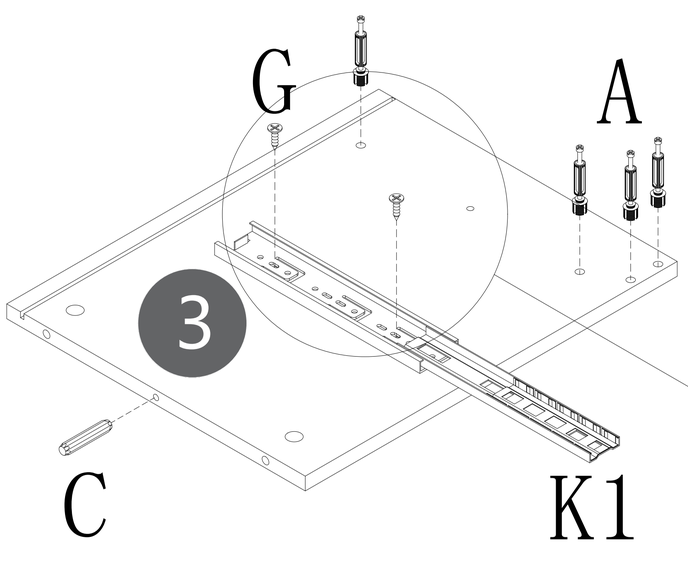

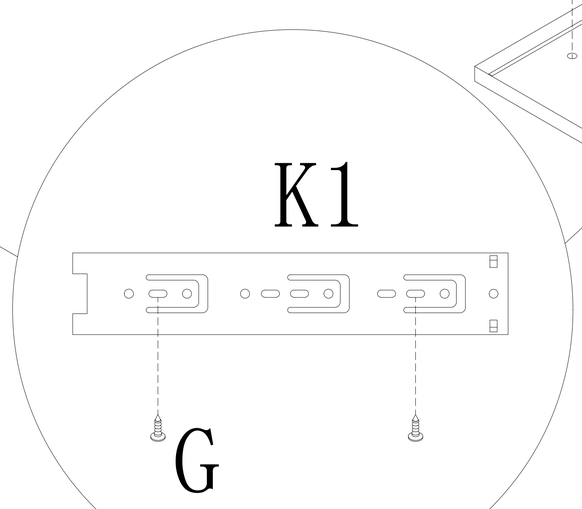

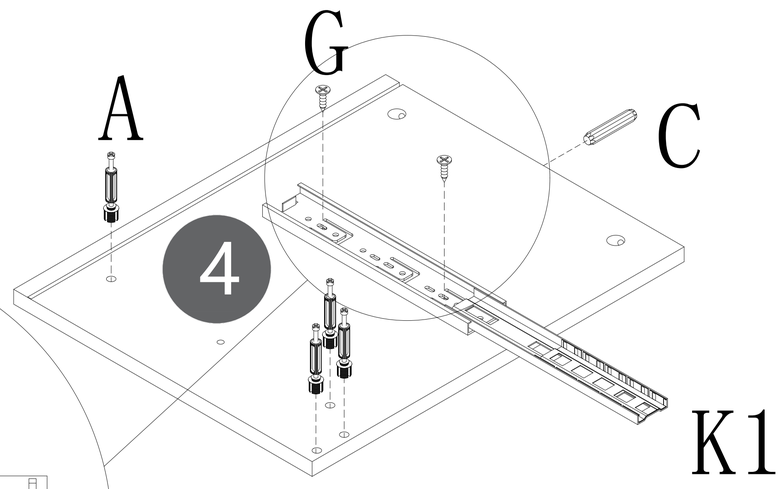

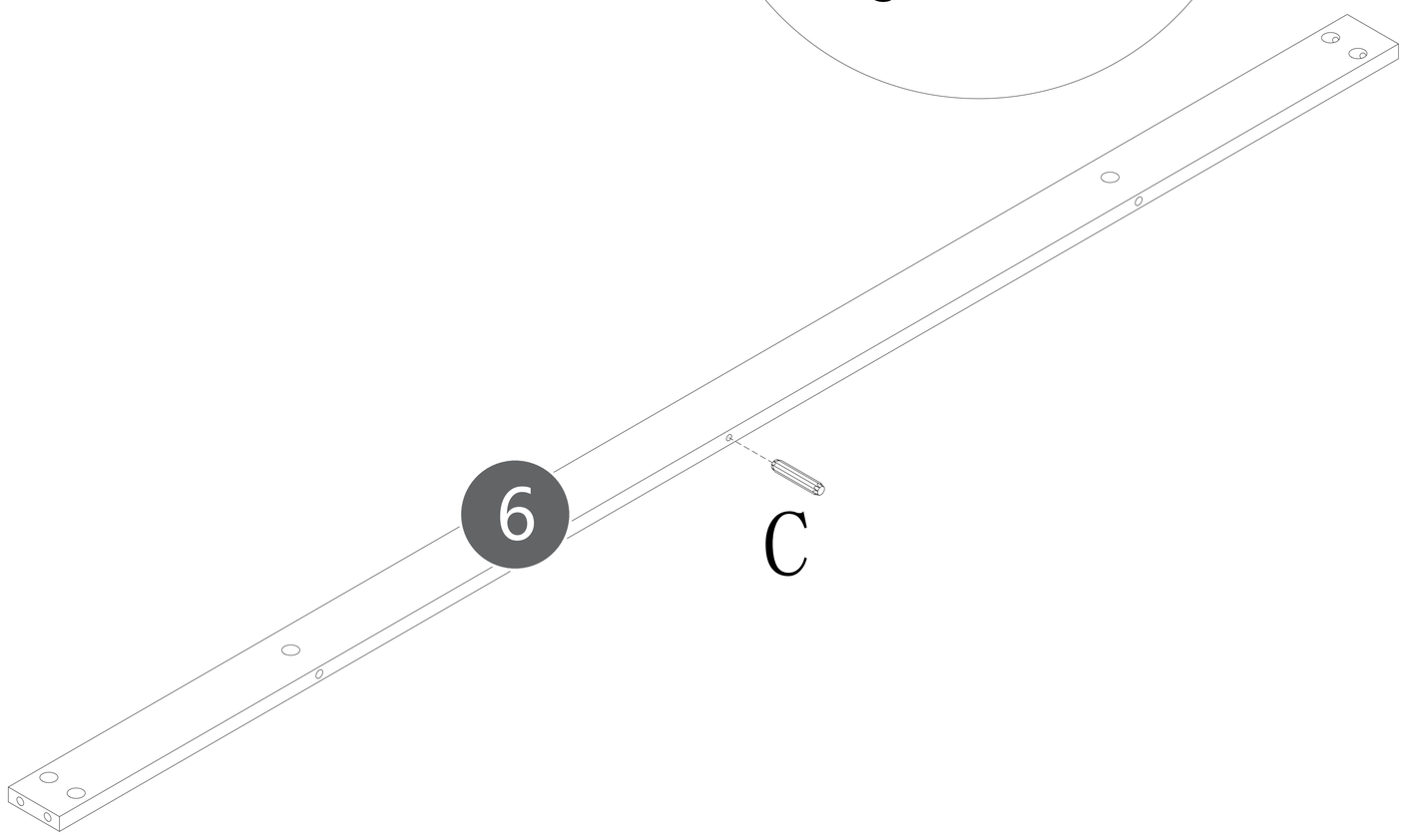

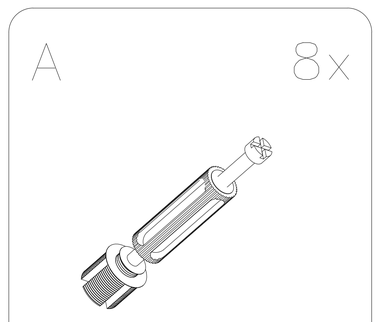

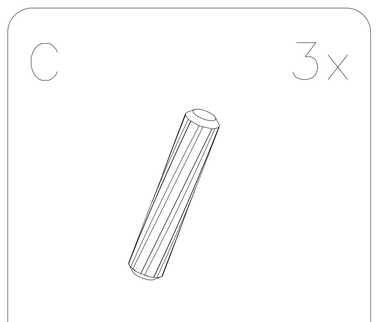

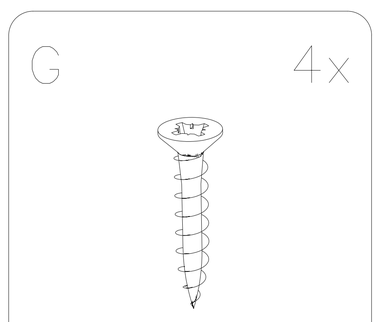

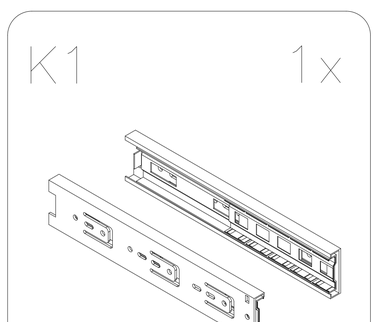

03

*3

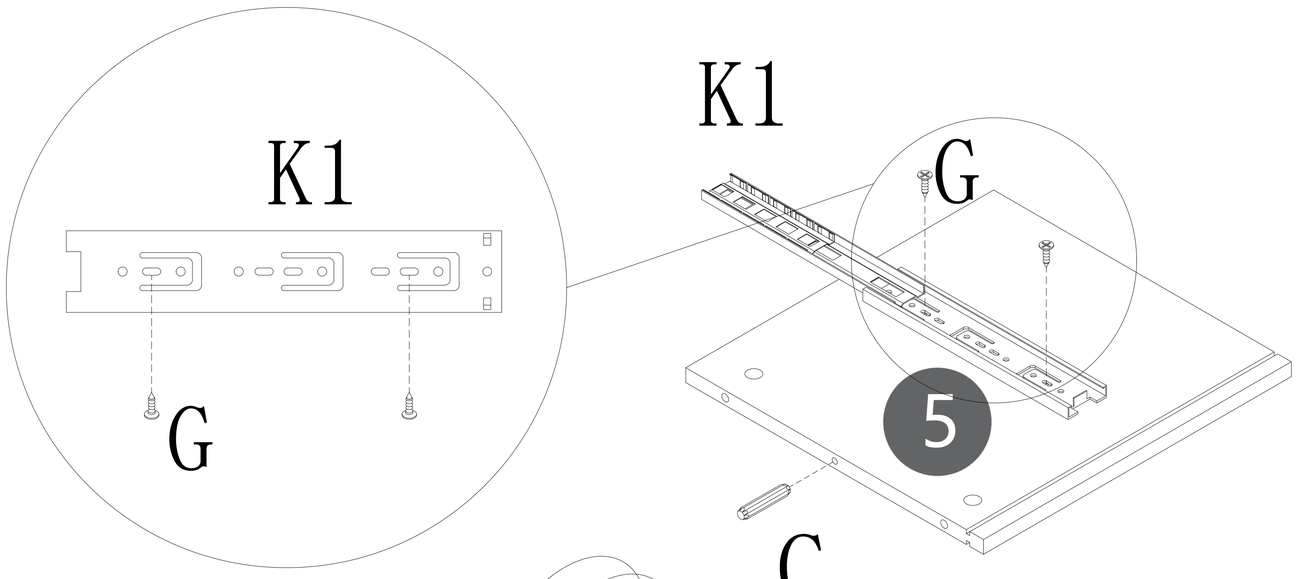
K1
G
K1
G
5
C
K1
G
5

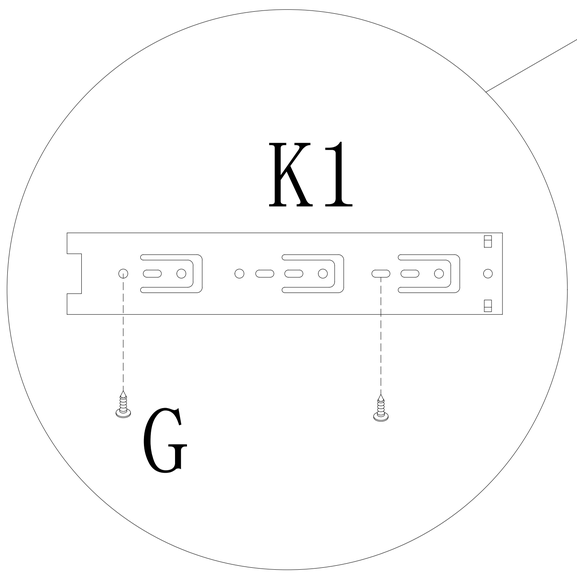
K1
G

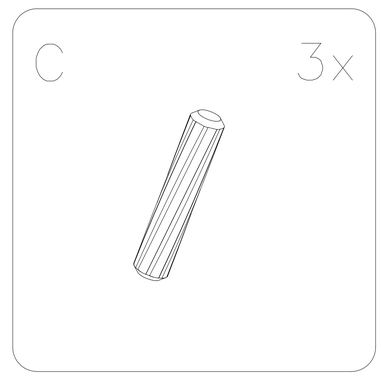
C
3x

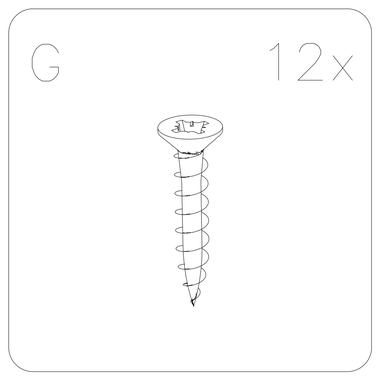
G
12x

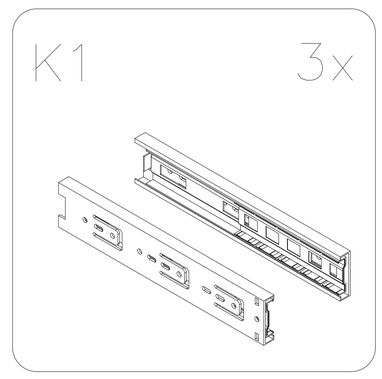
K1
3x

04

*4

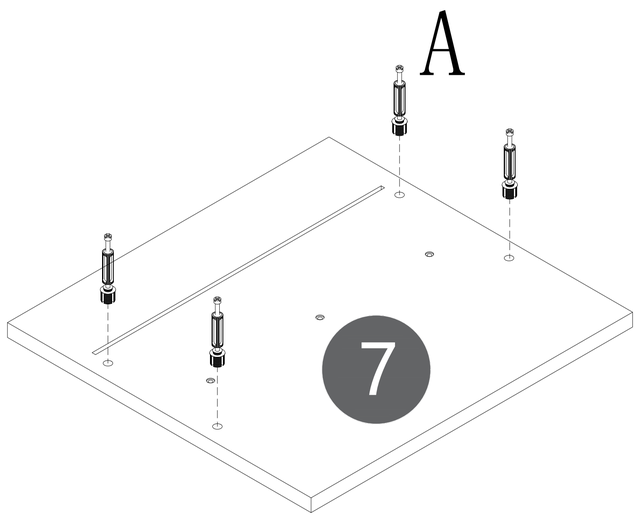
A
7

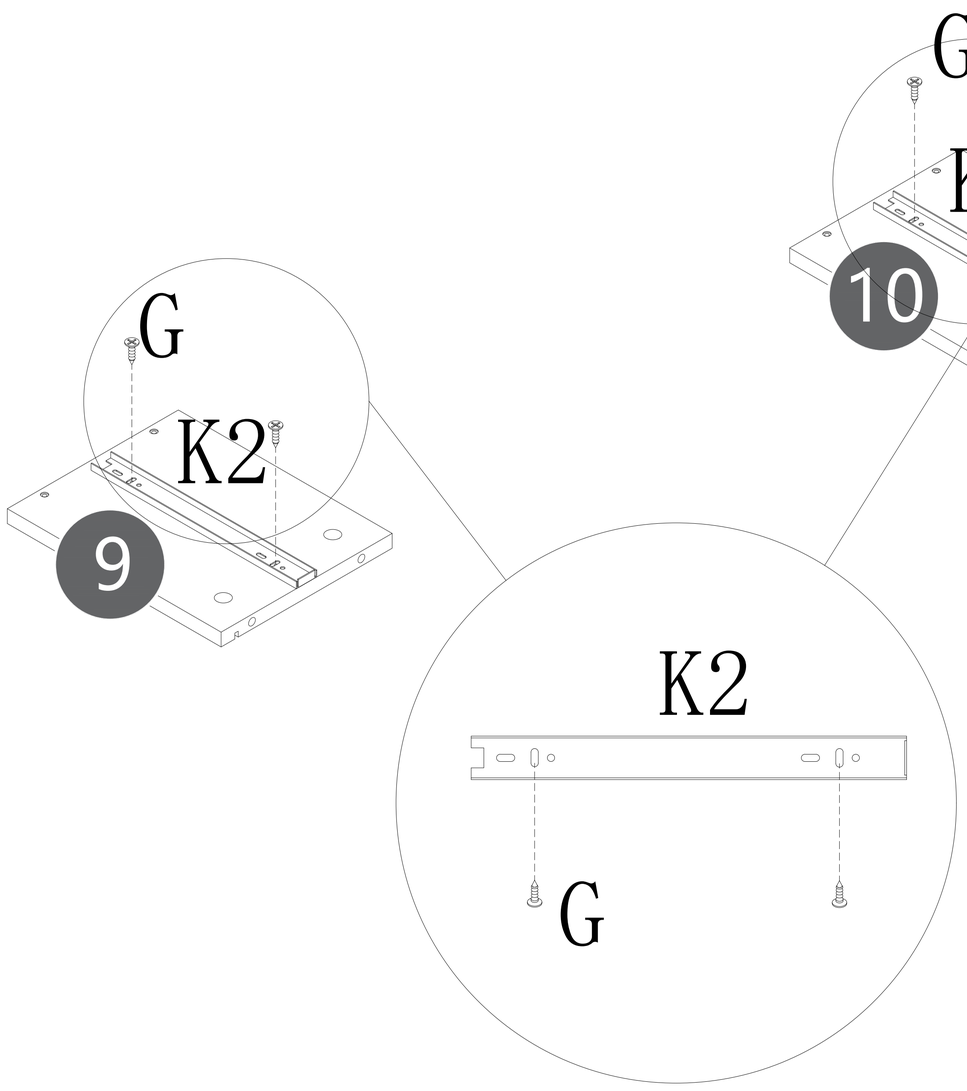
G
K2
9
G
K2
10
K2
G

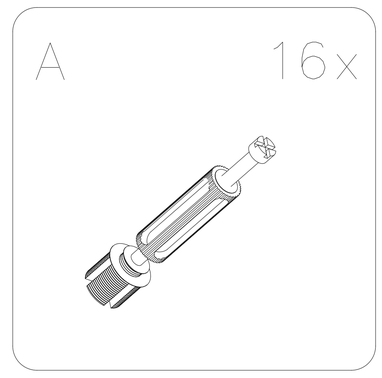
A
16x

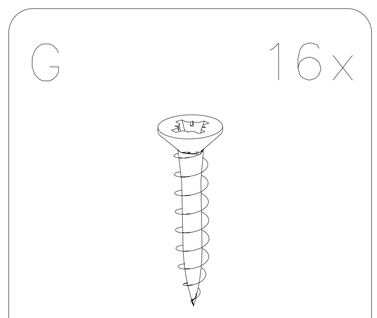
G
16x

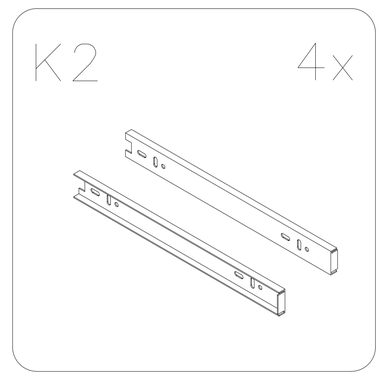
K2
4x

05

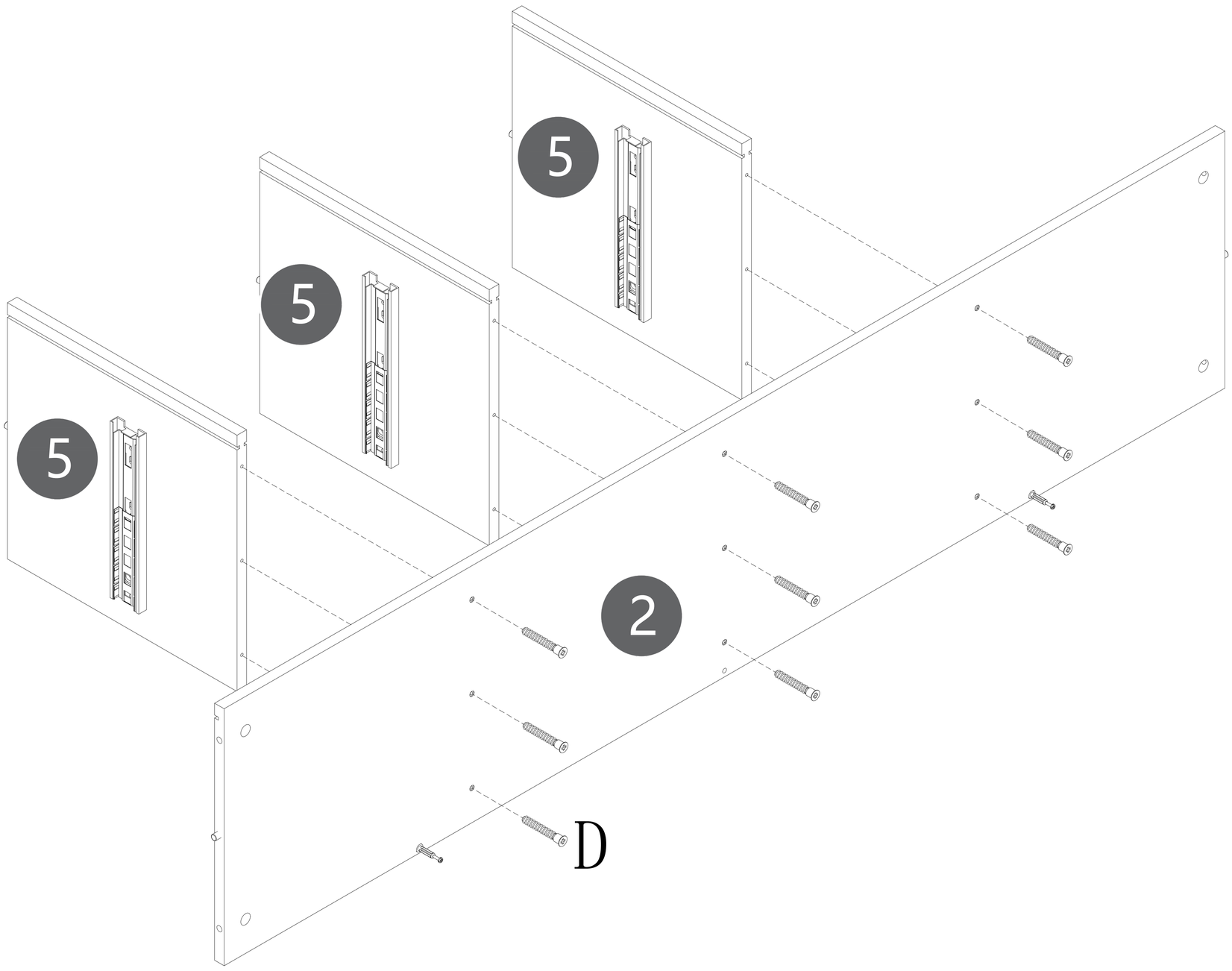

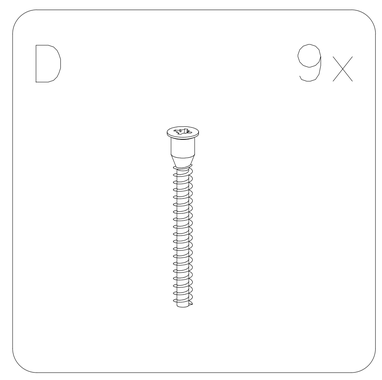

06

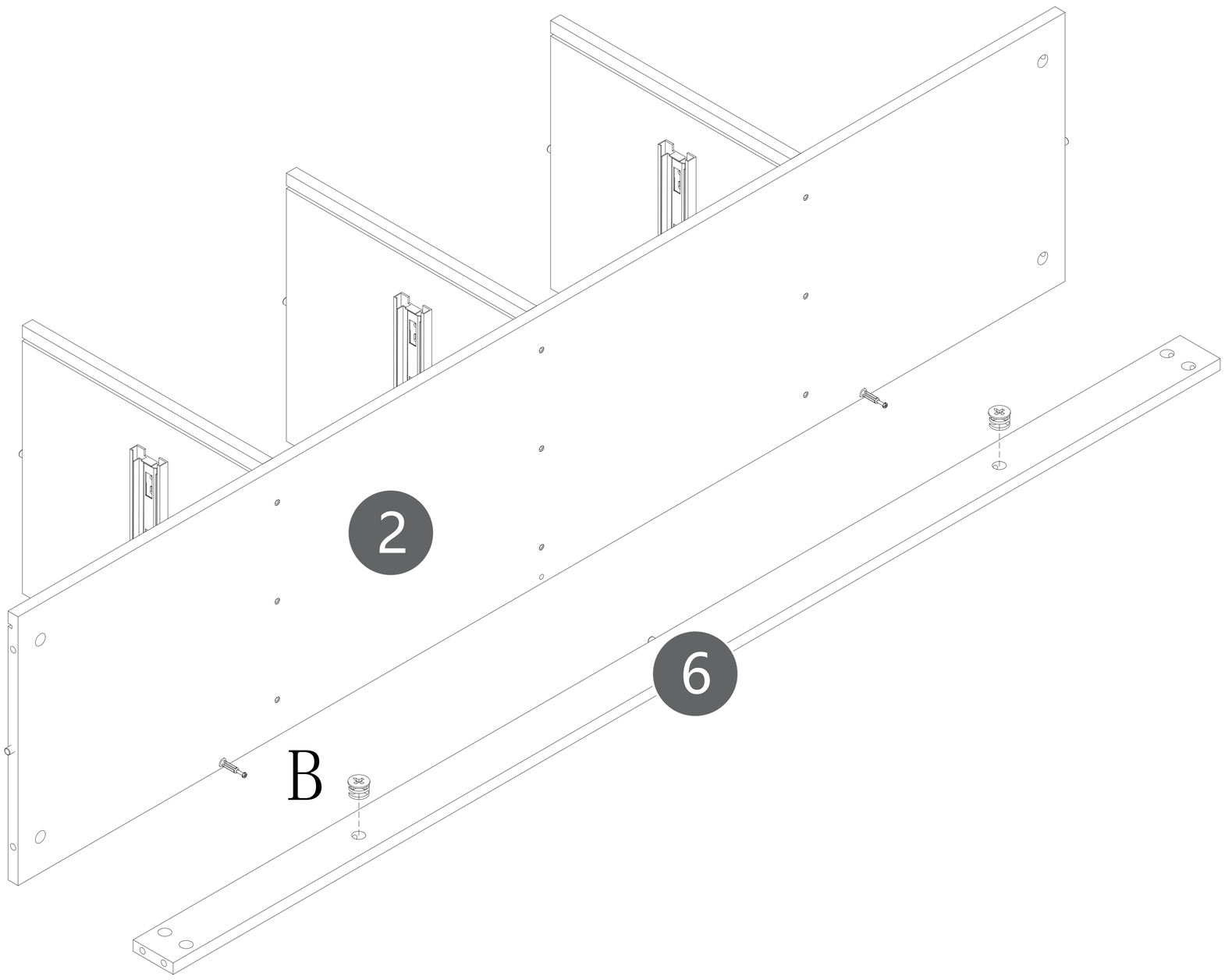

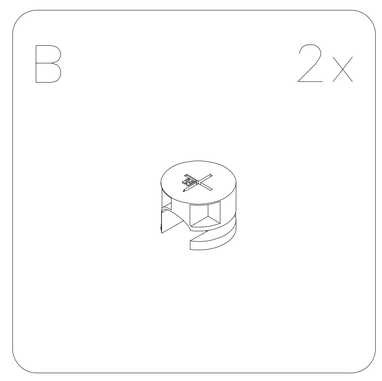

07

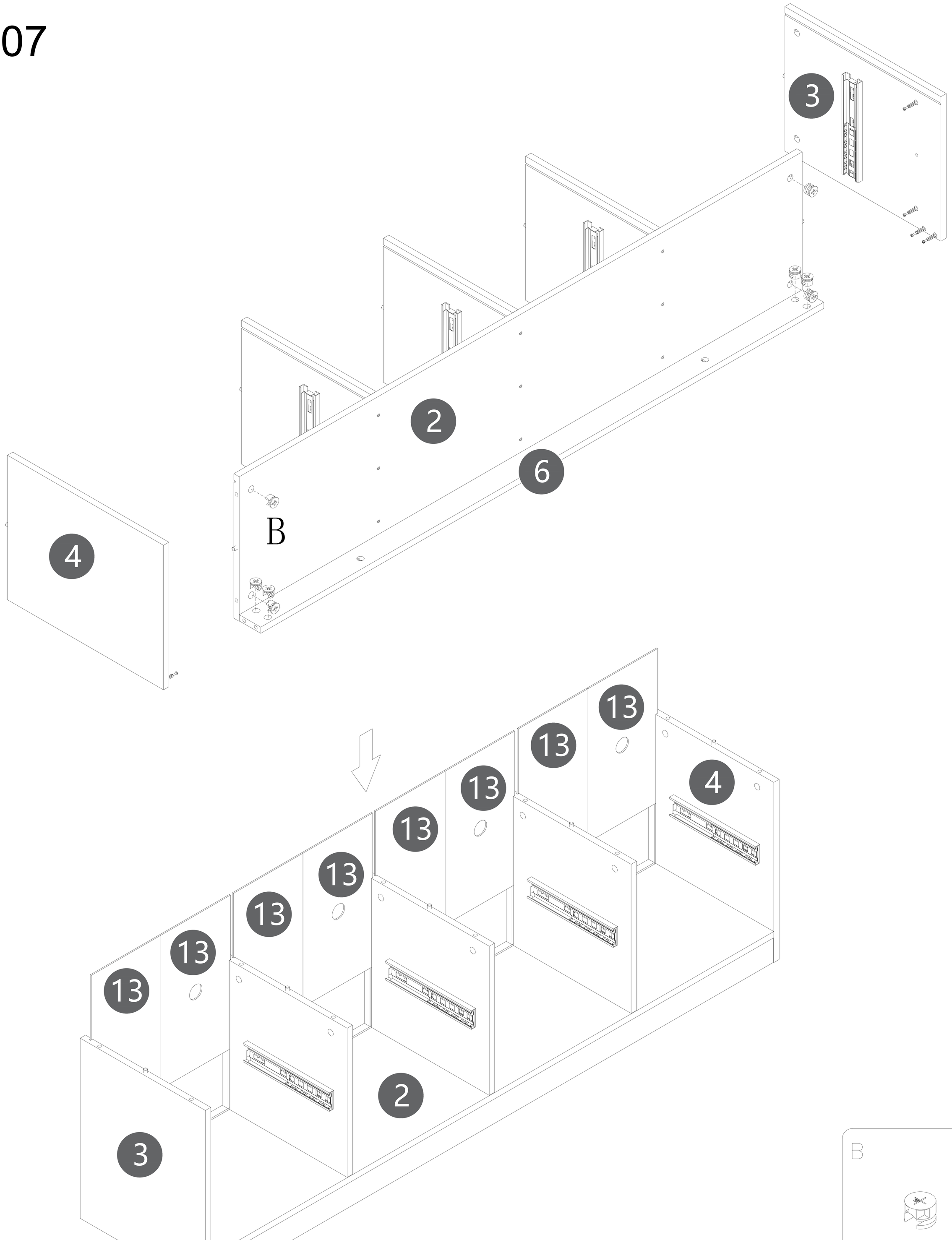

B 8x

08

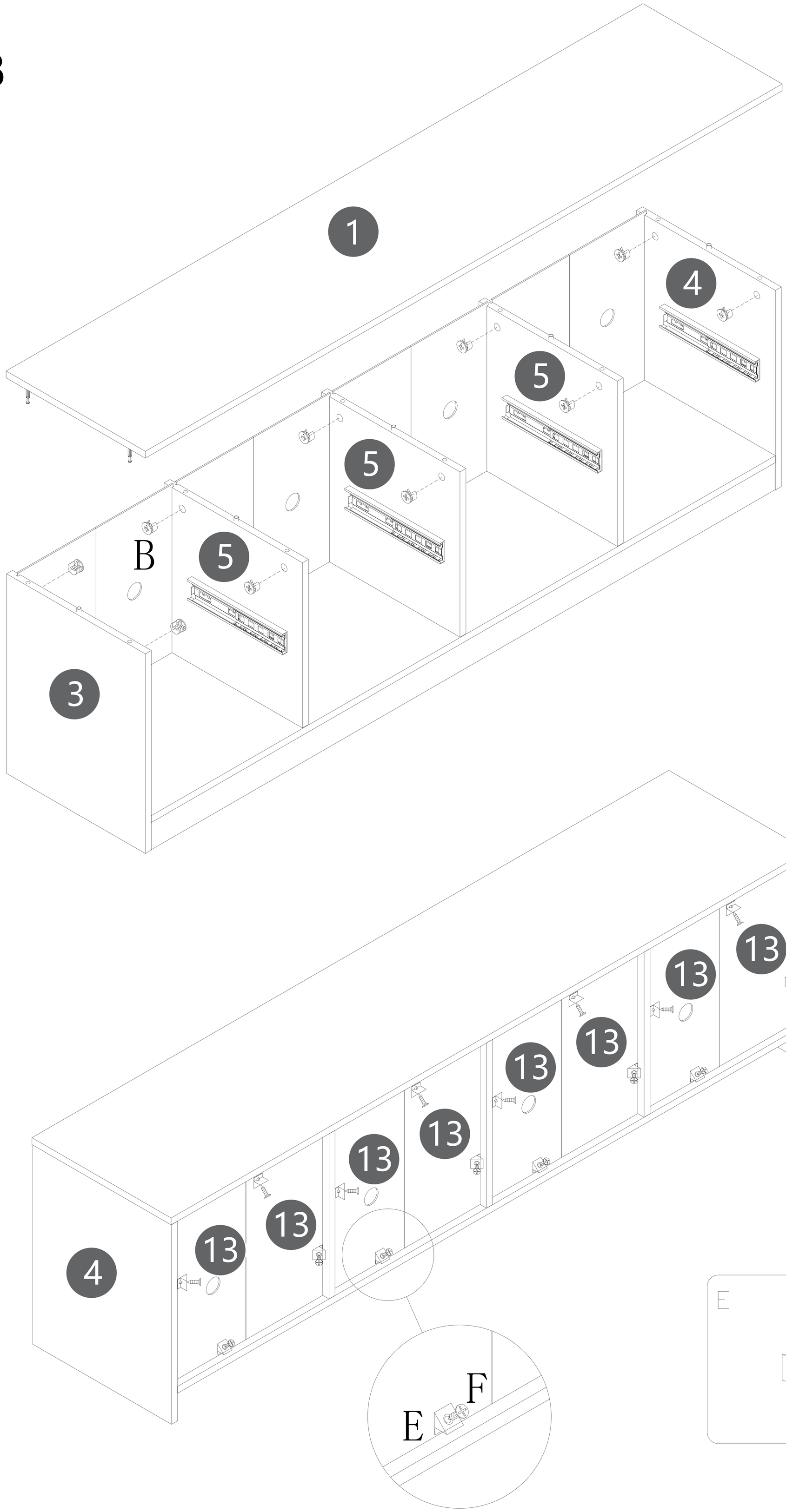

B 10x



E 16x

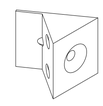

F 16x

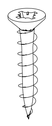

09

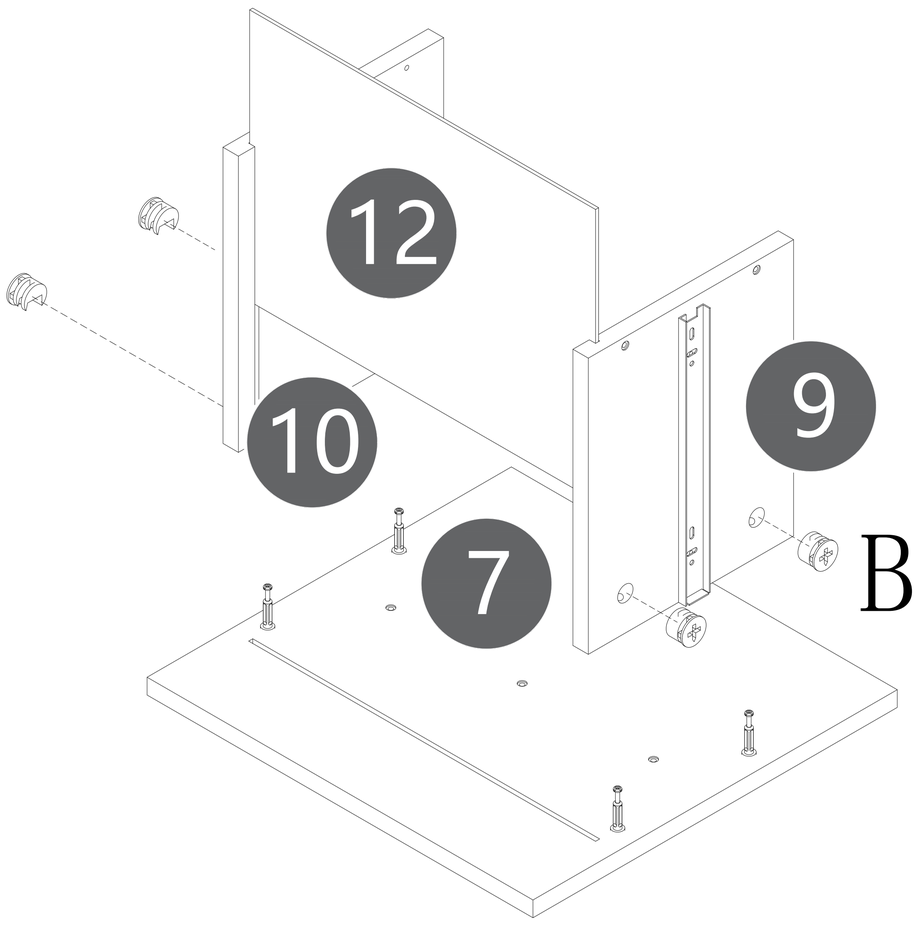

*4

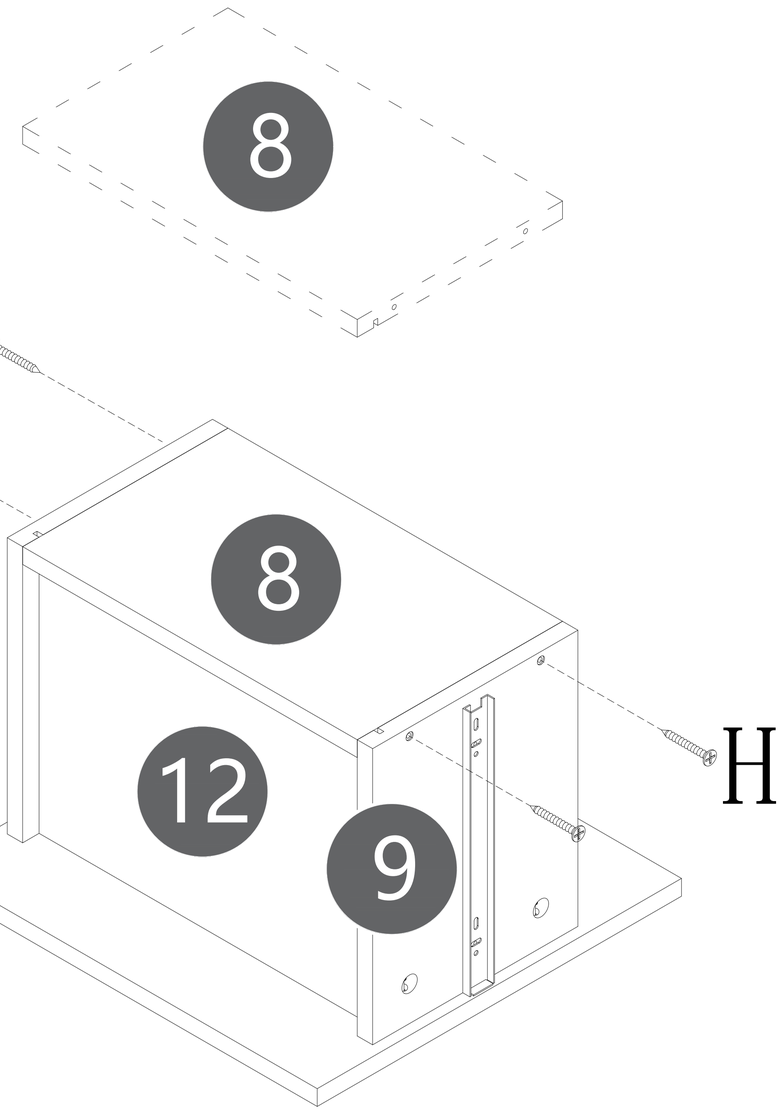

*4

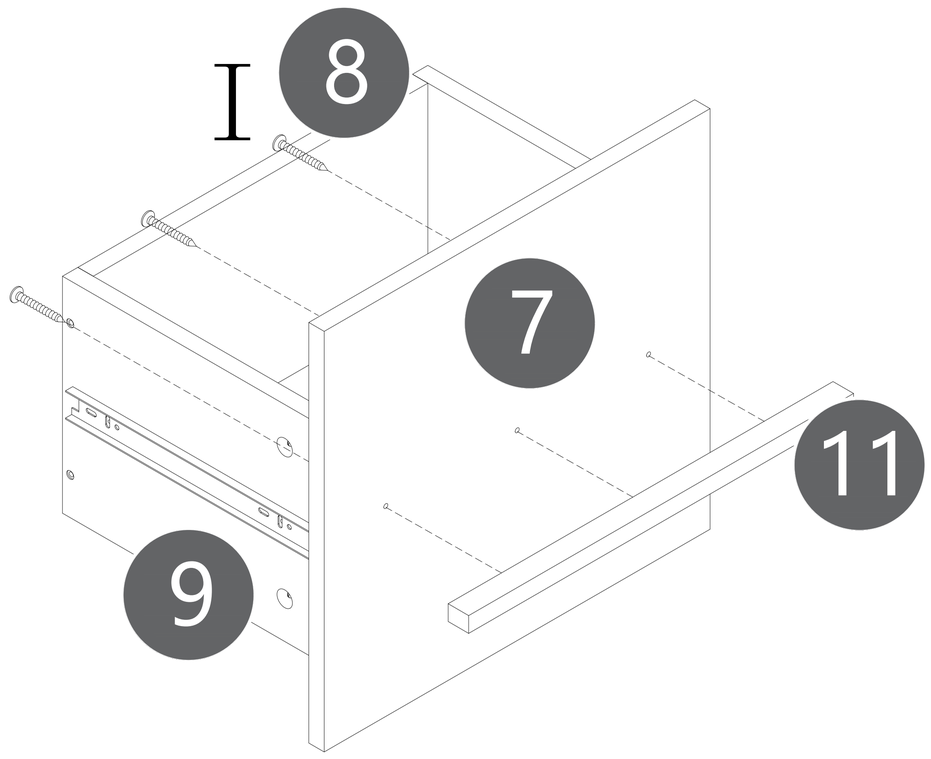

*4

B 16x



H 16x

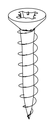

I 12x

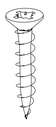

10

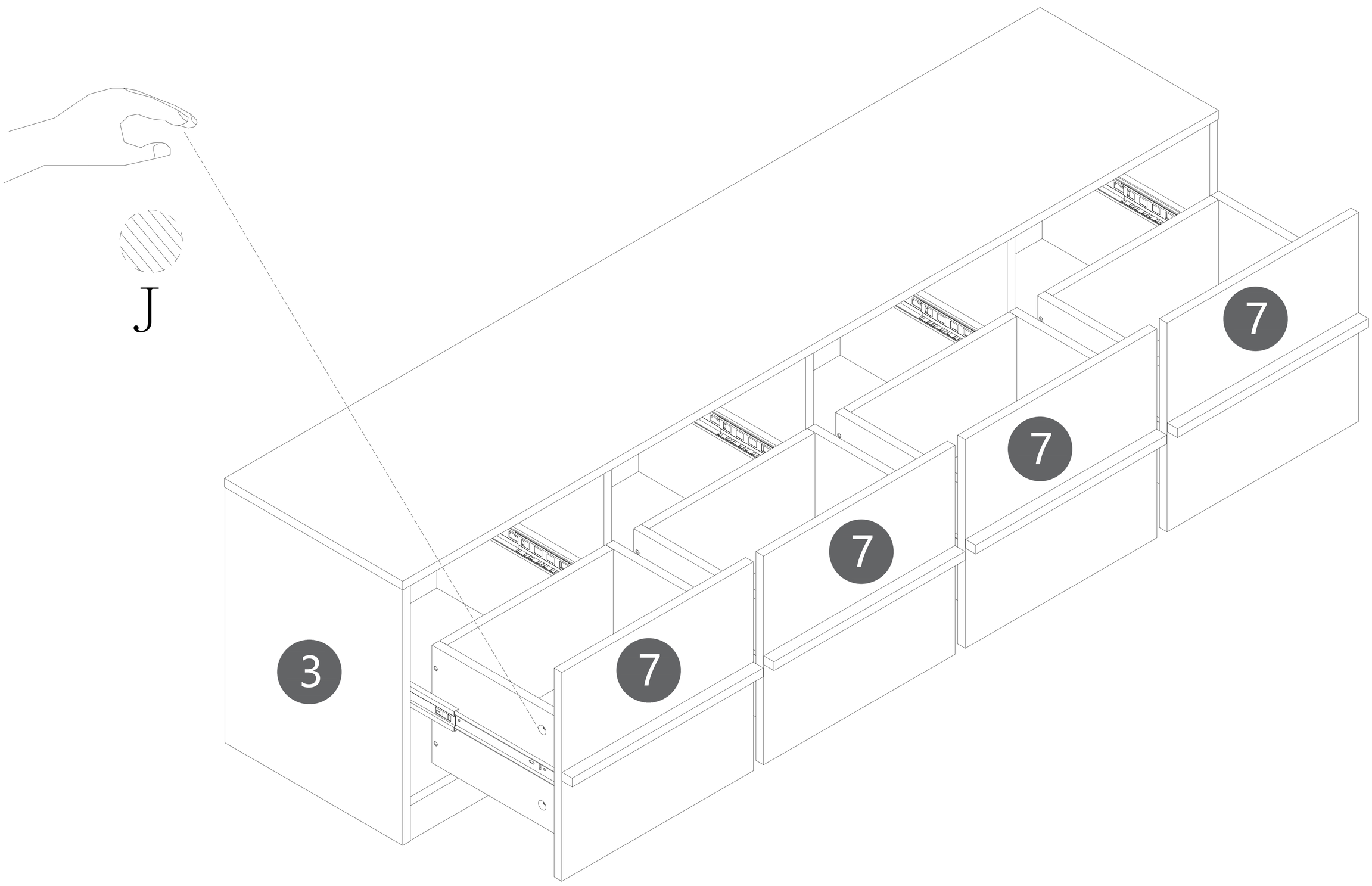

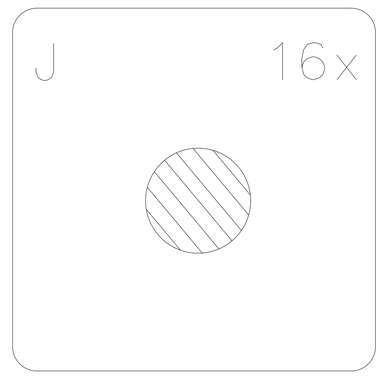

11

