TEAR SHEET

Anette Library Light

Item # RL 2270NB-SP

Designer: Ralph Lauren



Height: 12" - 16.5"
Width: 7.25"
Extension: 15.25" - 18.75"
Backplate: 4.75" Round
Finishes: NB, PN
Shade Treatments: NB, PN, SP
Shade Details: 2.25" x 7.25" x 4.75"
Socket: E12 Candelabra
Wattage: 40 B11
Weight: 3 Pounds

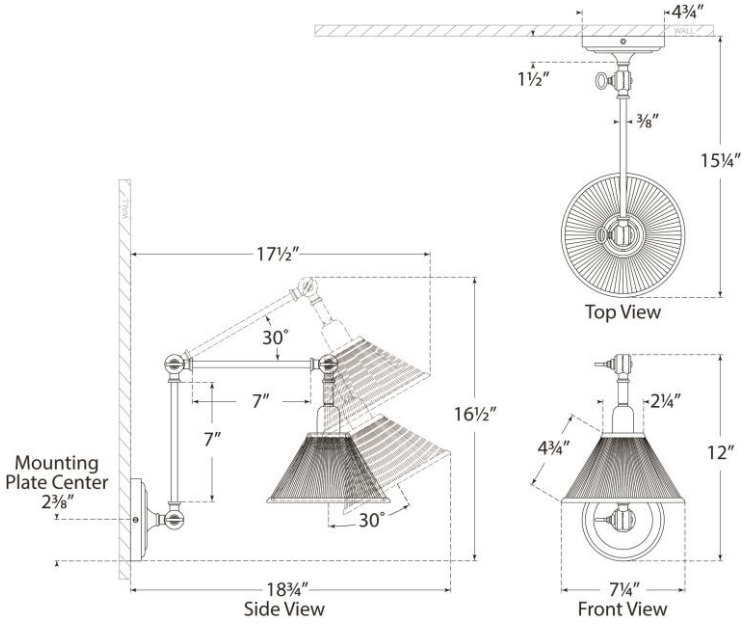

VISUAL COMFORT & CO.