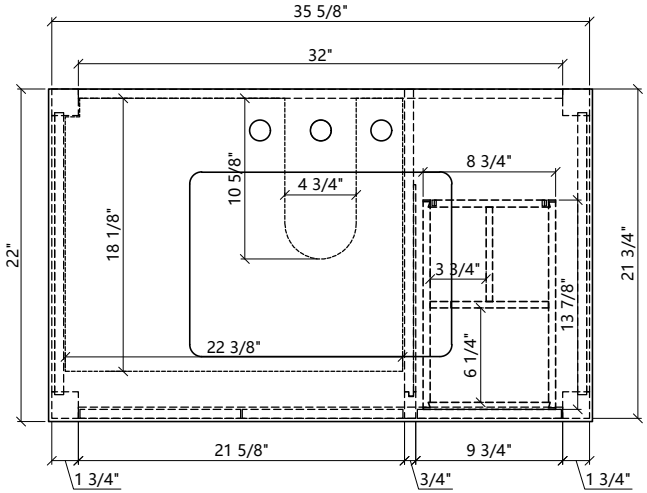
35 5/8"
32"
22"
18 1/8"
10 5/8"
4 3/4"
8 3/4"
3 3/4"
13 7/8"
21 3/4"
22 3/8"
6 1/4"
21 5/8"
9 3/4"
1 3/4"
3/4"
1 3/4"

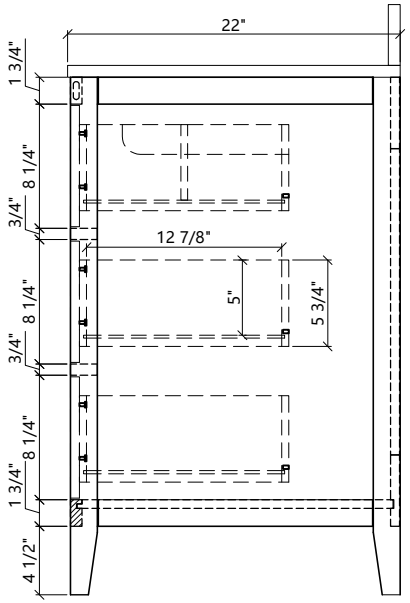
22"
1 3/4"
8 1/4"
3/4"
12 7/8"
5"
5 3/4"
8 1/4"
3/4"
8 1/4"
1 3/4"
4 1/2"

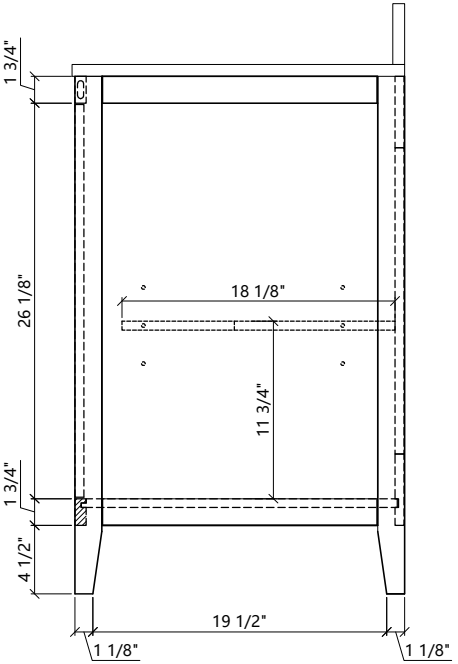
1 3/4"
26 1/8"
18 1/8"
11 3/4"
1 3/4"
4 1/2"
19 1/2"
1 1/8"
1 1/8"

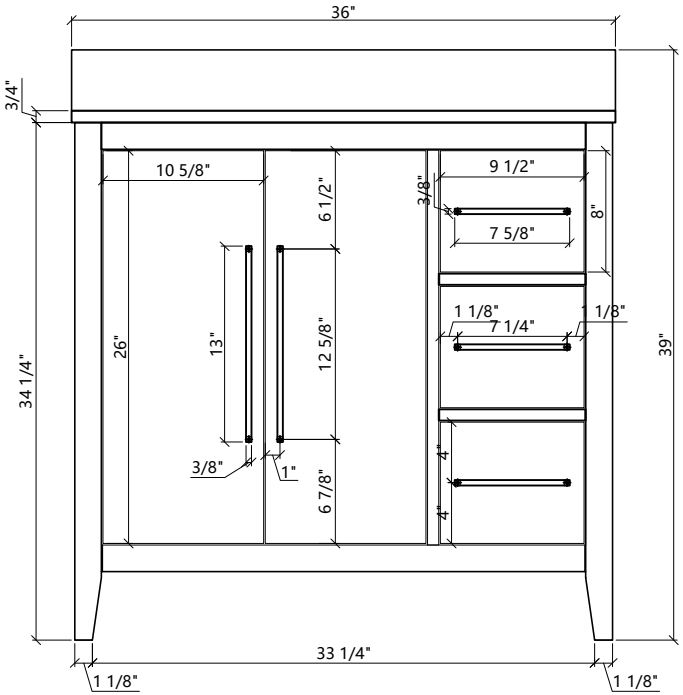
36"
3/4"
10 5/8"
6 1/2"
3/8"
9 1/2"
8"
7 5/8"
1 1/8"
7 1/4"
1 1/8"
26"
13"
12 5/8"
39"
34 1/4"
3/8"
1"
6 7/8"
4"
4"
33 1/4"
1 1/8"
1 1/8"

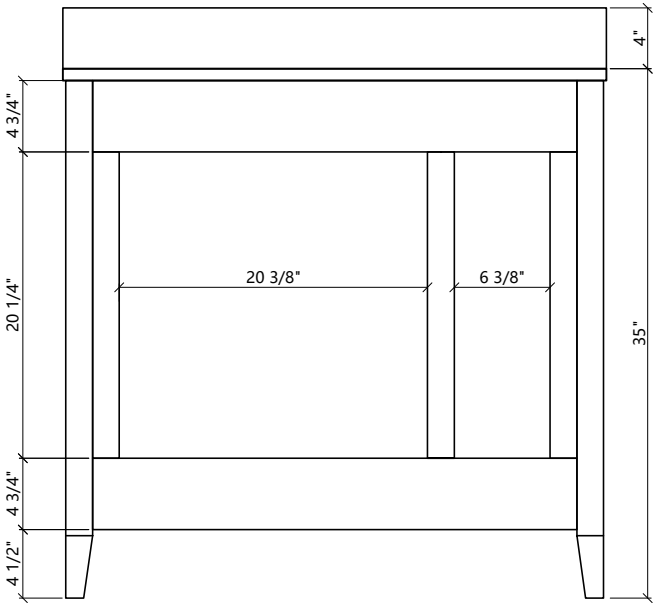
4"
4 3/4"
20 3/8"
6 3/8"
20 1/4"
35"
4 3/4"
4 1/2"

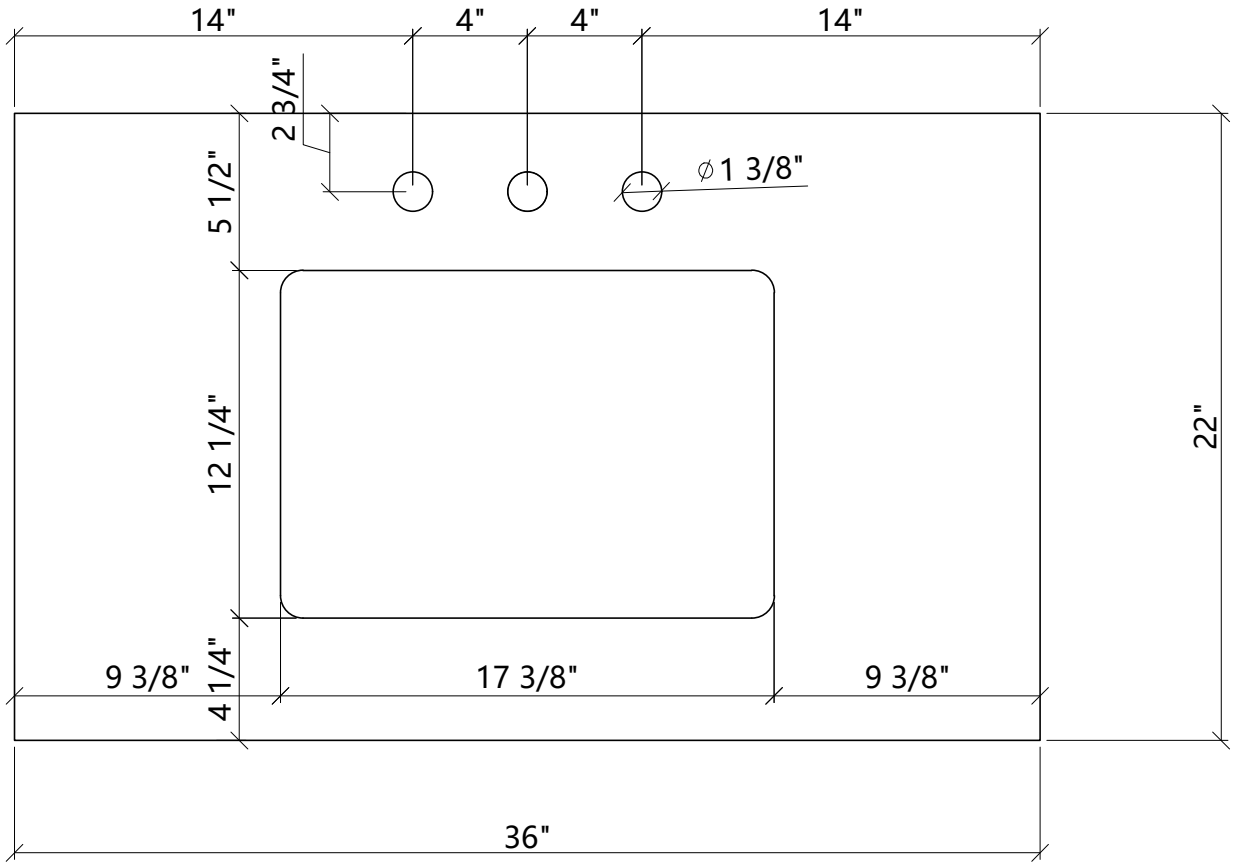
14"
4"
4"
14"
2 3/4"
5 1/2"
⌀1 3/8"
12 1/4"
22"
4 1/4"
9 3/8"
17 3/8"
9 3/8"
36"

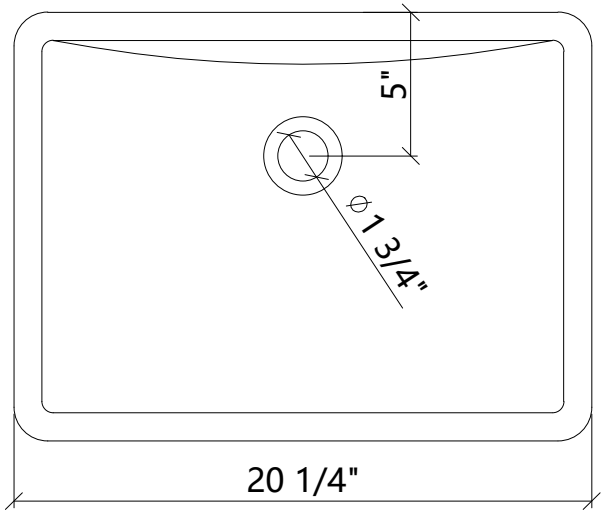
5"
ϕ 1 3/4"
20 1/4"

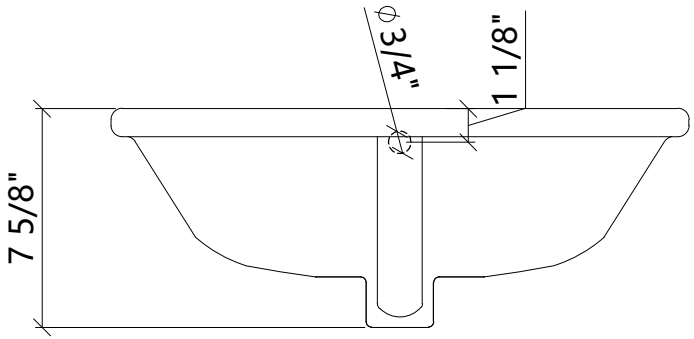
ϕ 3/4"
1 1/8"
7 5/8"

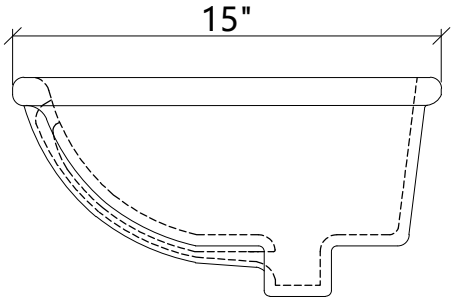
15"