Assembly Instruction

-CBN318A-

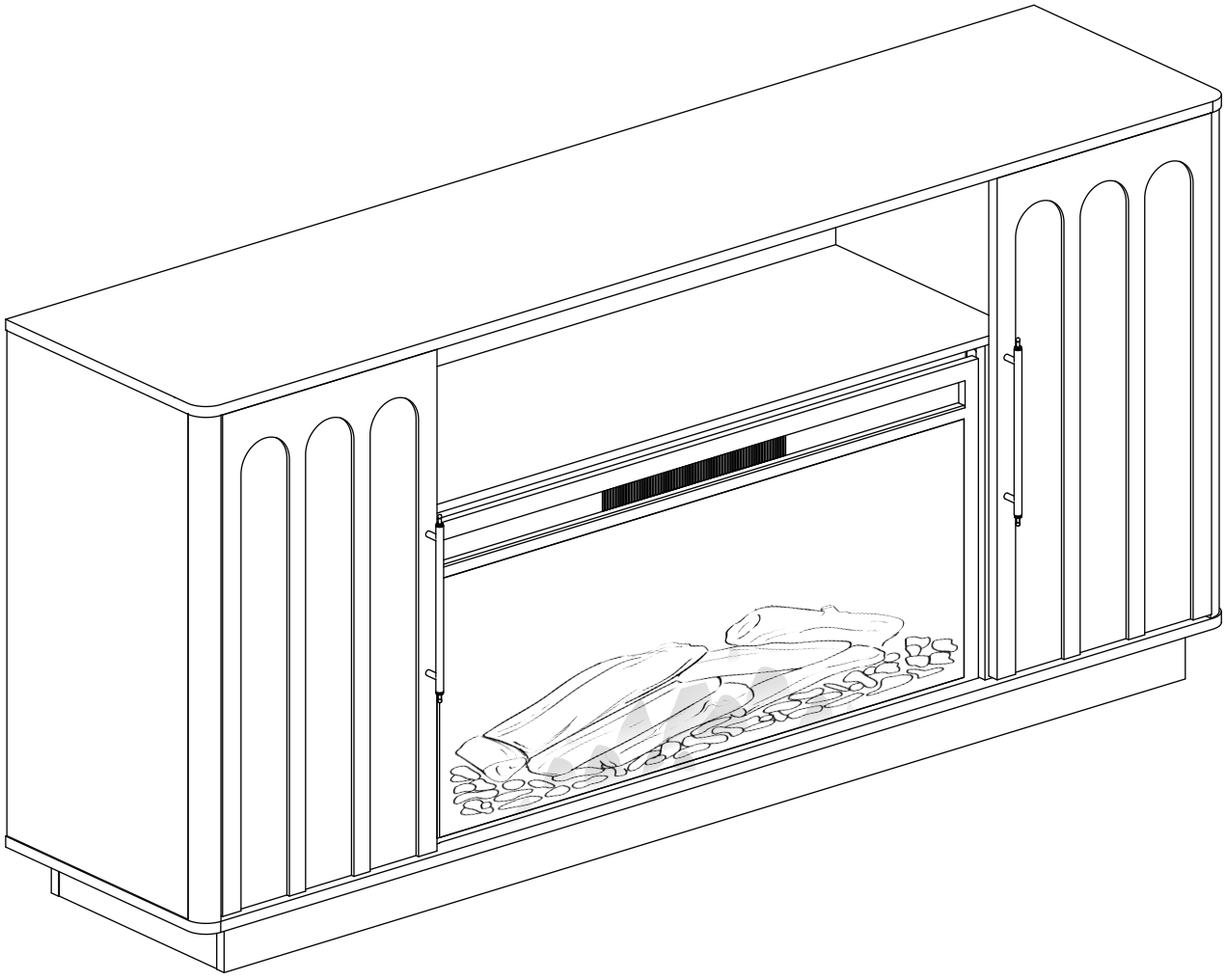

General Guidelines

▪Please read the following instructions carefully before use.
▪Keep this manual and hand it over to the new owner when you transfer the product.
▪This summary may not include every detail of all variations and every step considered. Please contact us if further information or assistance is needed.

Notes

▪The product is intended for indoor use only. It must be assembled and used in accordance with the provisions of this manual. Personal injury and/or product damage may occur if the product is used outside its intended purpose or if it has been modified from its original design.
▪The seller assumes no liability for any injury or damage caused by incorrect assembly or improper use.
▪Avoid long-term exposure to humid environments to prevent mildew.
▪Keep the product away from heat sources and open flames. Do not expose it to direct sunlight.
▪Do not place hot objects directly on the surface of the product.
▪If any parts are defective or missing after unpacking, stop assembly immediately and contact us.
▪Depending on the size and weight of the product, assembly and moving may require two or more people.
▪Assemble the product on a spacious surface. Do not place the unpackaged product directly on the ground to avoid damage to the product or personal injury.
▪Do not jump on the product. Do not stand, sit, or step on individual components (e.g., wooden panels or slats), as they may break under concentrated weight and cause injury.
▪Do not exceed the maximum load capacity of the product or its components where specified.
▪Wear gloves during assembly and/or disassembly to avoid scratches from sharp edges.
▪Match each part and fitting to its corresponding part number in the manual.
▪During assembly, first loosely align all screws with the corresponding pre-drilled holes, then tighten them one by one.
▪Periodically inspect screw tightness while the product is in use. Retighten if necessary to ensure structural integrity.
▪If water or any other liquid is spilled on the surface, wipe it clean immediately with a dry towel.
▪Lift the product when moving it; do not drag it, as dragging may damage both the product and the floor.

Warnings

▪During assembly, keep all small parts out of the reach of children. Swallowing or inhaling small parts may cause serious injury.
▪Children should be supervised when using the product. Do not allow children to climb on or play with tall units, as this may cause the product to tip over and result in serious injury.
▪To avoid the danger of suffocation, keep all parts and packaging (film, plastic bags, foam, etc.) out of the reach of babies and children.
▪Keep sharp objects and corrosive items away from the product to avoid damage or injury.
▪Do not shake or move the product violently during use, as this may loosen the fasteners, damage the structure, or cause the product to tip over.

Exploded(EN)

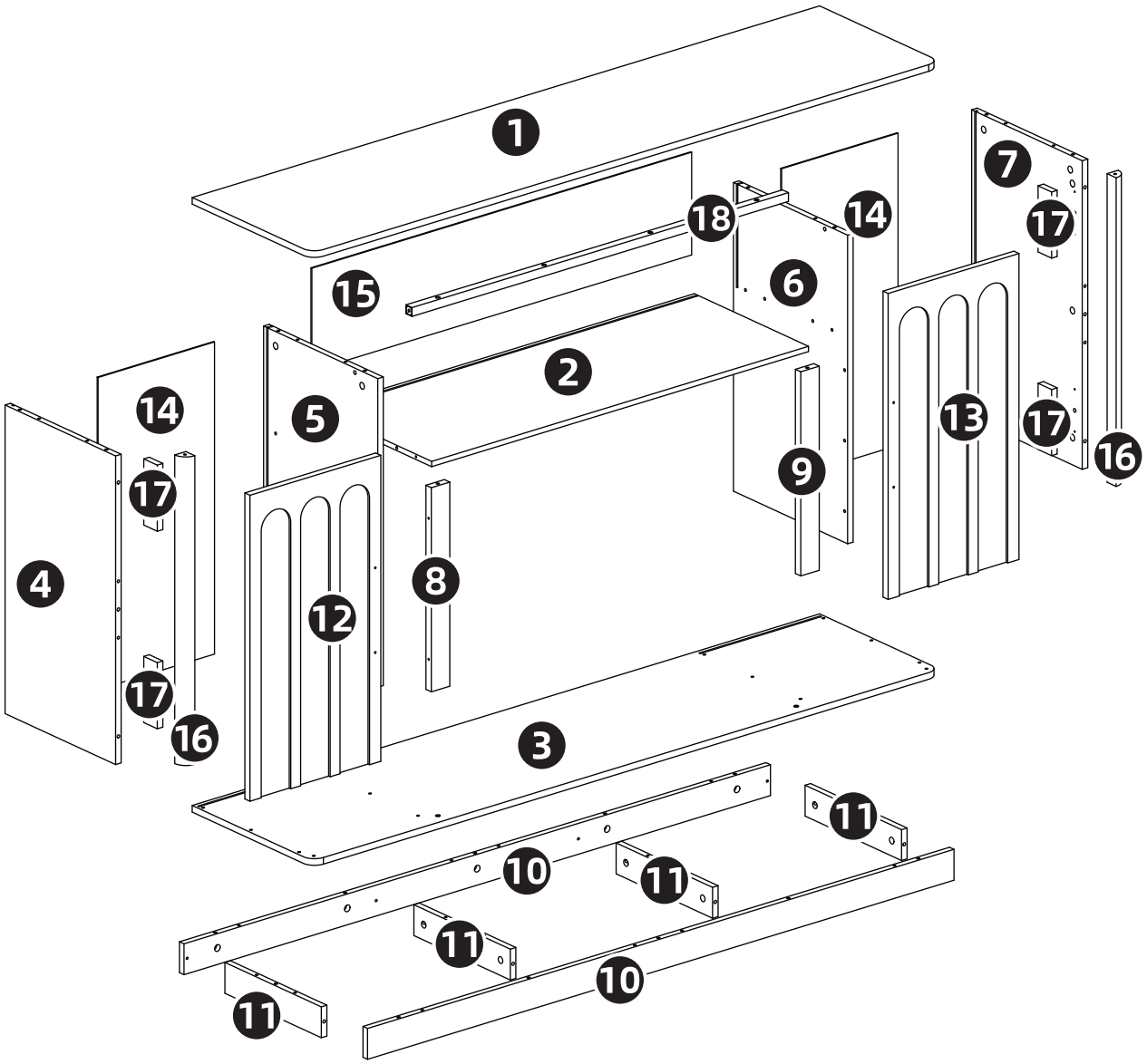

Parts List(EN)

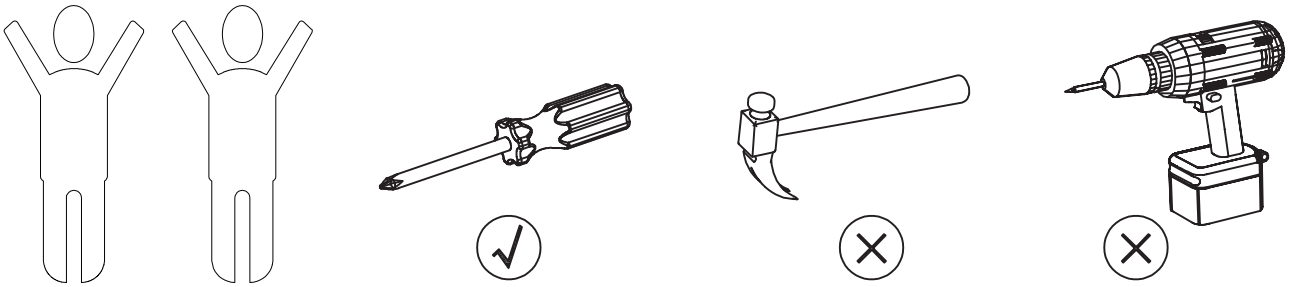

1 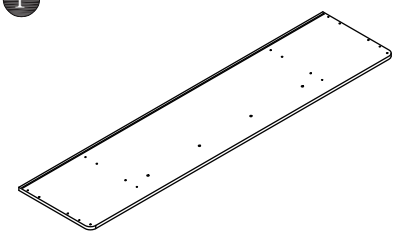 x1	2 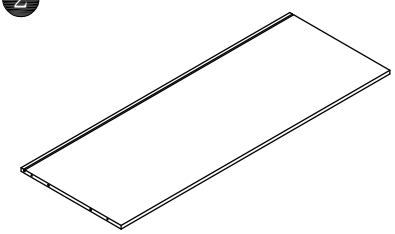 x1	3 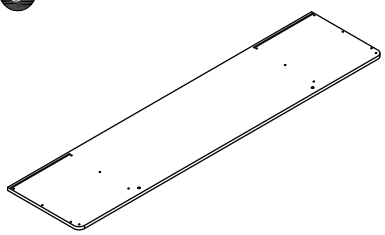 x1
4 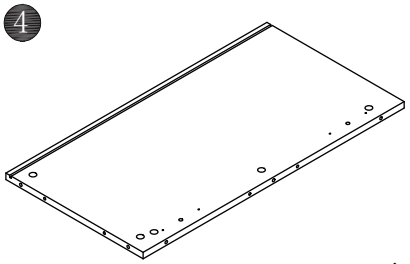 x1	5 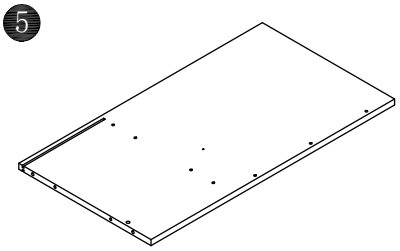 x1	6 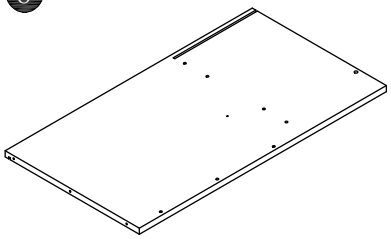 x1
7 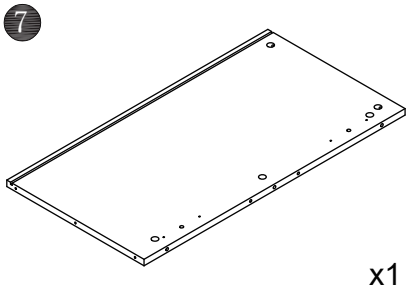 x1	8 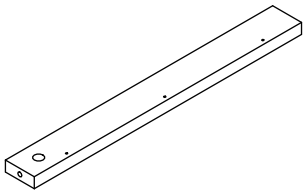 x1	9 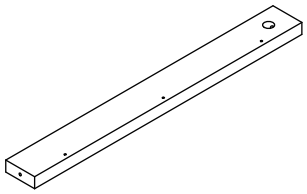 x1
10 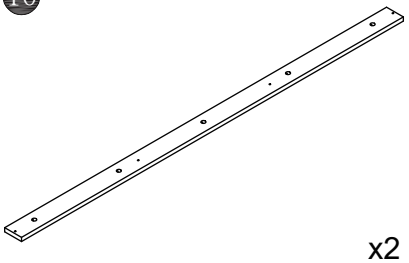 x2	11 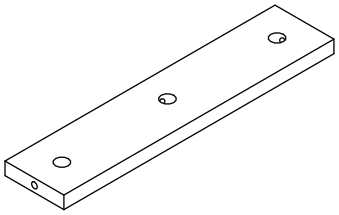 x4	12 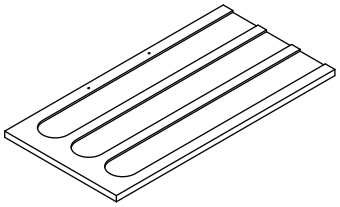 x1
13 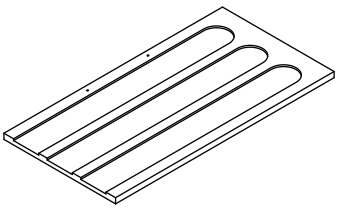 x1	14 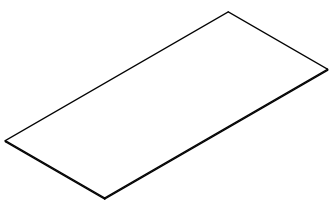 x2	15 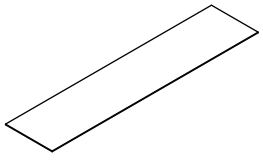 x1

Parts List(EN)

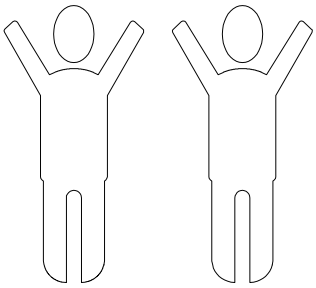

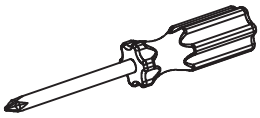

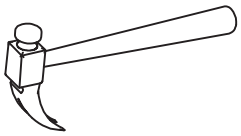

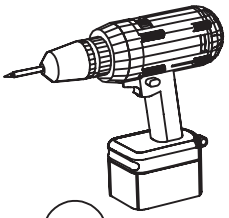

16 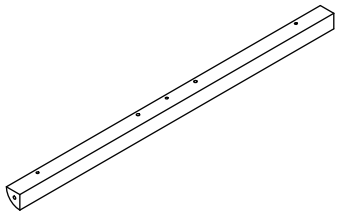 x2	17 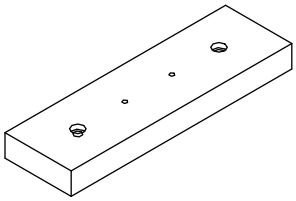 x4	18 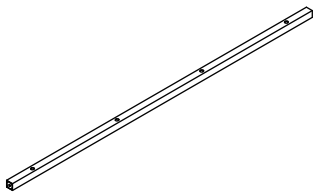 x1
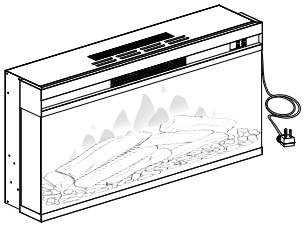 **Fireplace x1**		

Hardware List(EN)

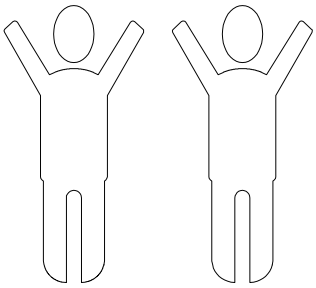
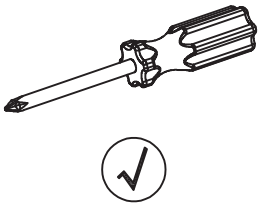
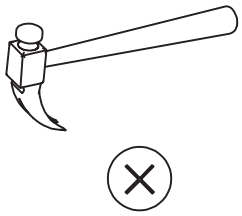
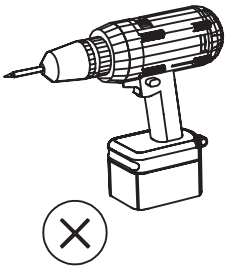

A  6x40mm 38+3PCS	B  15x9.5mm 38+3PCS	C  6x30mm 36+3PCS	D  8x20mm 4+1PC
E  ST5x45mm 24+2PCS	F  M3.5x12mm 32+3PCS	G  M3.5x25mm 8+1PC	H 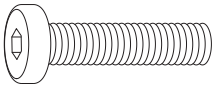 6+1PC
I  2PCS	J  4+1PC	K 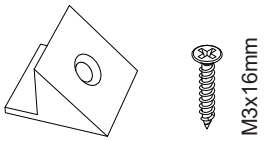 M3x16mm 18+2SETS	L 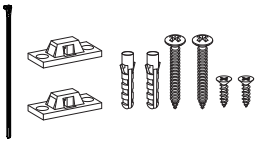 2SETS
M 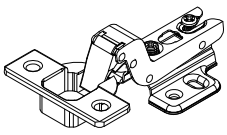 4PCS	N 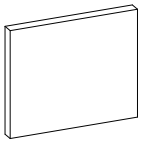 Furniture Pad 8+2PCS	O  3mm 1PC	P 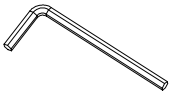 4mm 1PC
Q 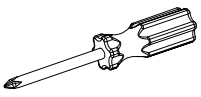 1PC	R  ϕ21mm 38+3PCS	S 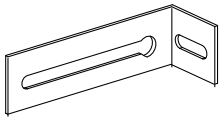 2PCS	

Instructions For Fastening
CAM-BOLT and CAM-LOCK



CAM-BOLT



CAM-LOCK

Tools Required

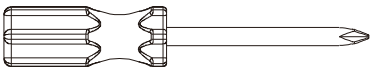



INSERTING AND TIGHTENING CAM-BOLT

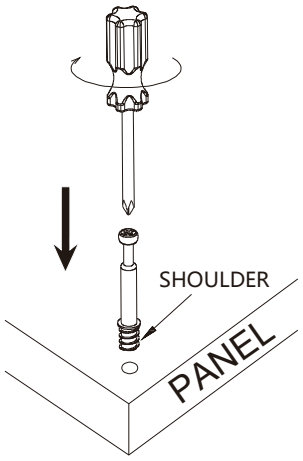

Place Cam-bolt on pre-drilled hole and screw in vertically

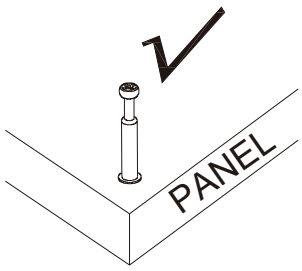

Shoulder is flushed (on the same level) with the panel

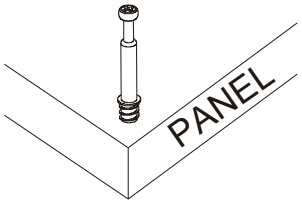

Shoulder is above the panel

Place Cam-bolt on the designated pre-drilled holes on the panel. Use a Phillips Screwdriver to screw-in Cam-bolt vertically until shoulder is flushed (on the same level) with panel.

INSERTING CAM-LOCK

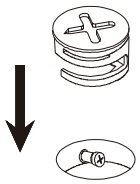

Insert Cam-lock with arrow align to Cam-bolt head

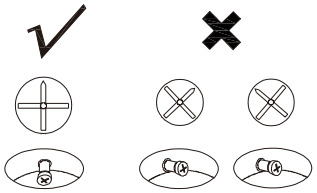

CORRECT WRONG

Align the arrow on the Cam-lock to the Cam-bolt head and insert the Cam-lock. Ensure Cam-lock is fully inserted.

TIGHTENING CAM-LOCK

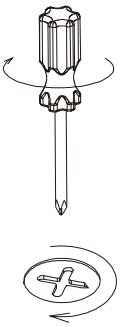

Use a Phillips-head screwdriver to turn Cam-lock clockwise so it locks onto the head of the Cam-bolt. Turn until it is snug (about 3/4ths of a turn) -- over-tightening could damage Cam-lock and/or Cam-bolt.

Assembly Steps(EN)

STEP 1

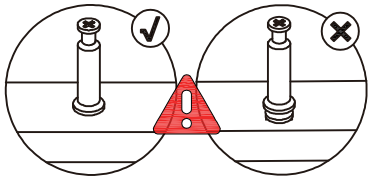

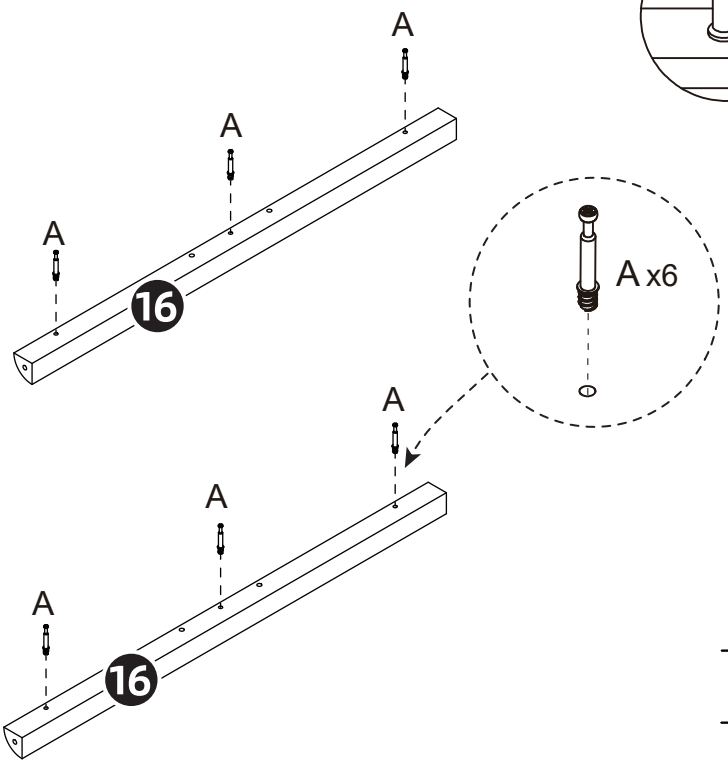

A	x6
Q	

STEP 2

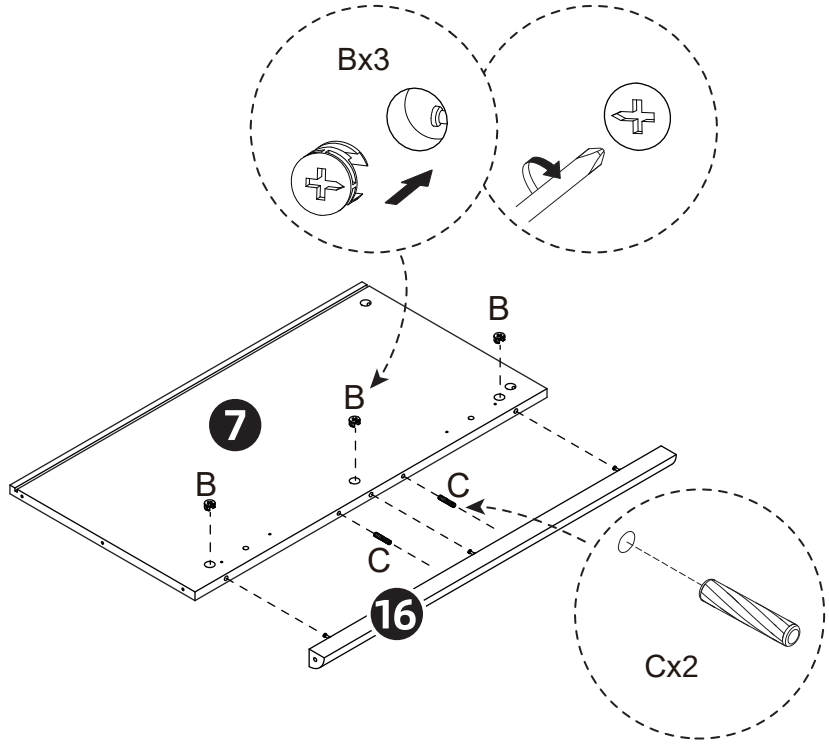

B	x3
C	x2
Q	

Assembly Steps(EN)

STEP 3

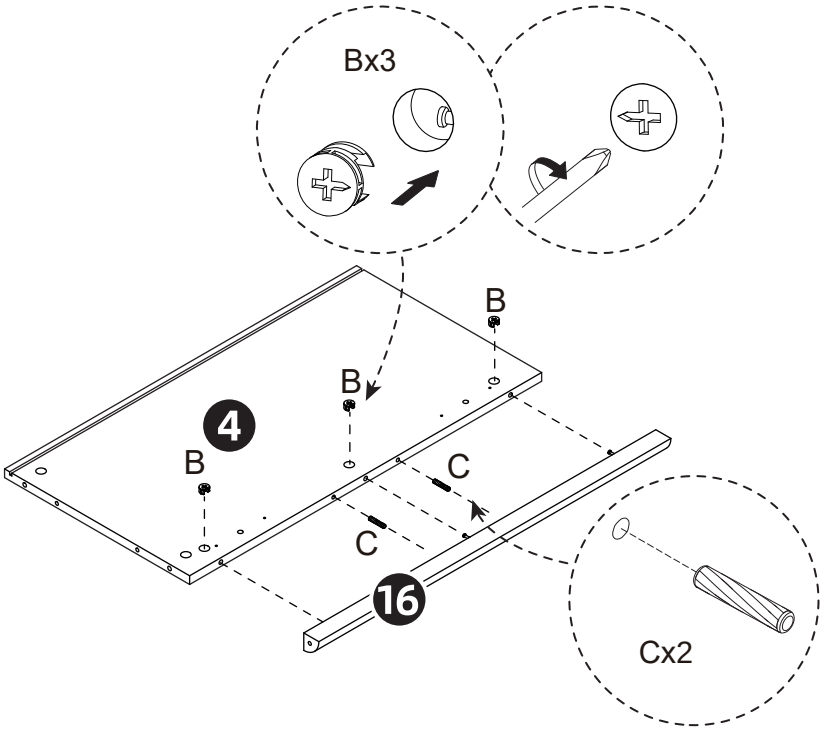

B		x3
C		x2
Q		

STEP 4



It is recommended to install by multiple people working together.

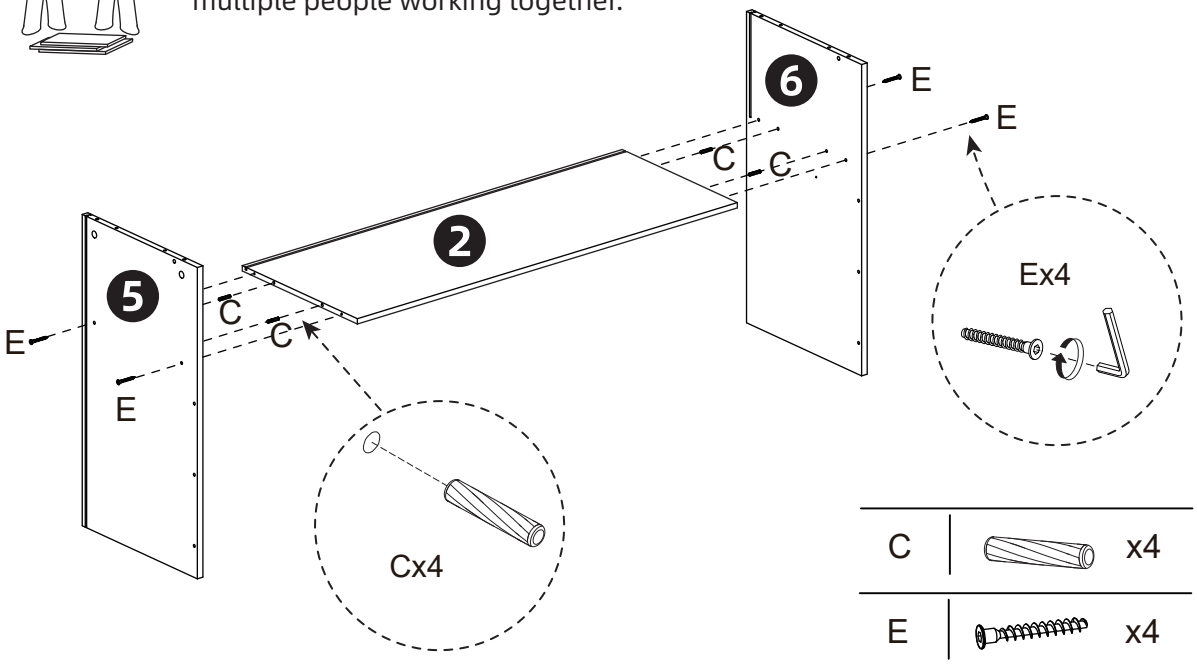

C		x4
E		x4
O		

Assembly Steps(EN)

STEP 5

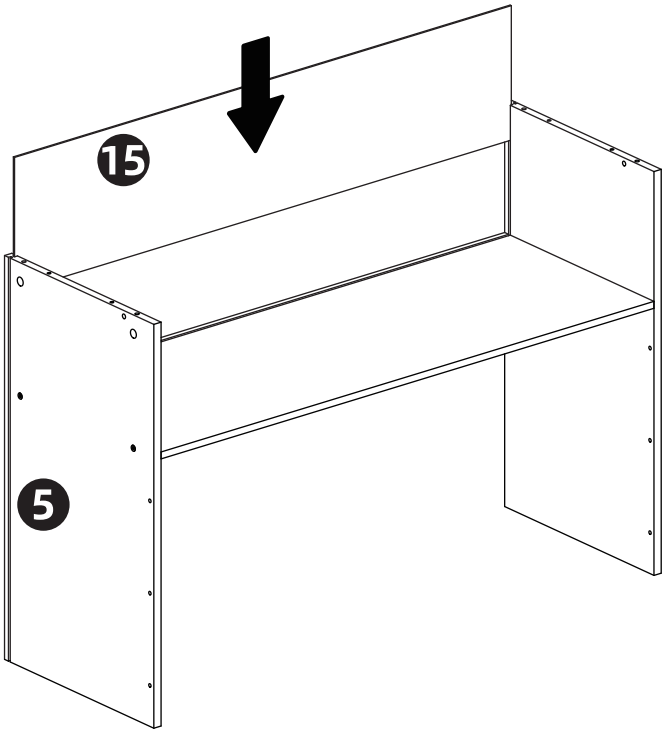

STEP 6

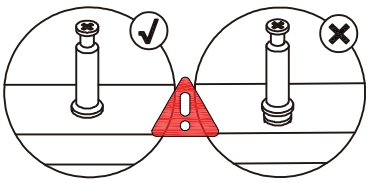

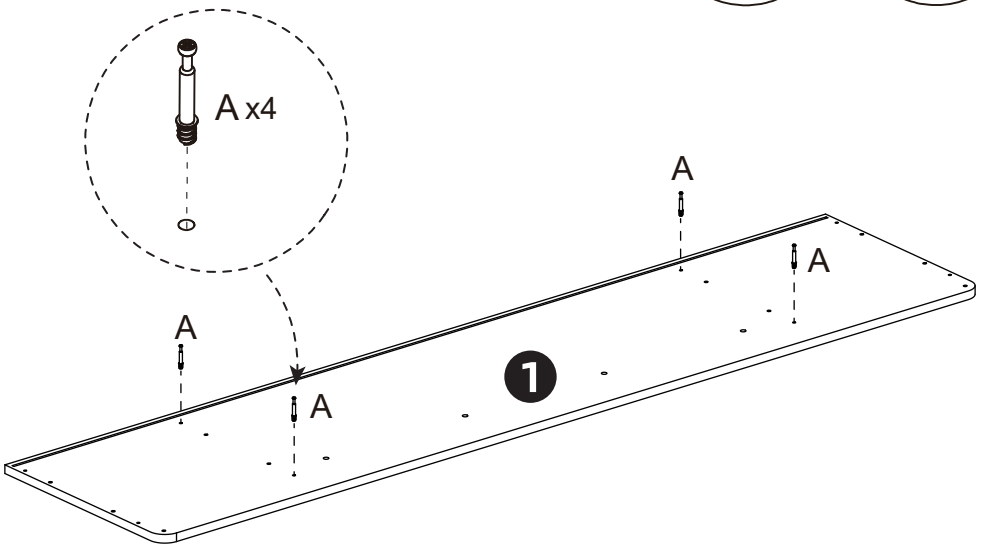

A	x4
Q	

Assembly Steps(EN)

STEP 7



It is recommended to install by multiple people working together.

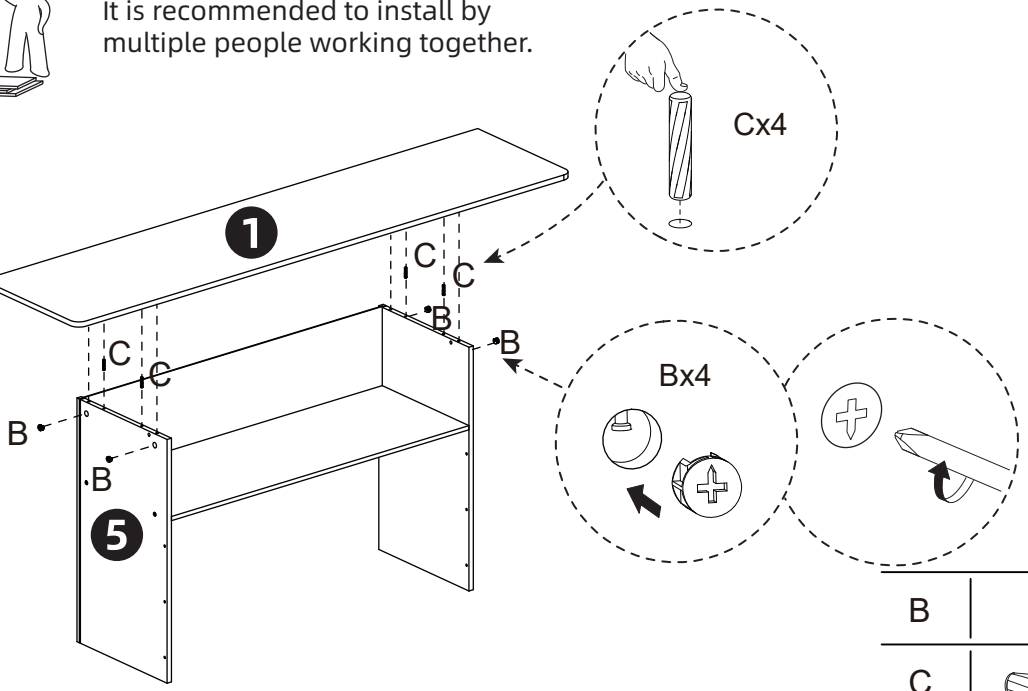

B		x4
C		x4
Q	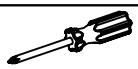	

STEP 8

Note: For this step, please take a suitable foam pad from the packagingand place it under the product to prevent scratching the panels.

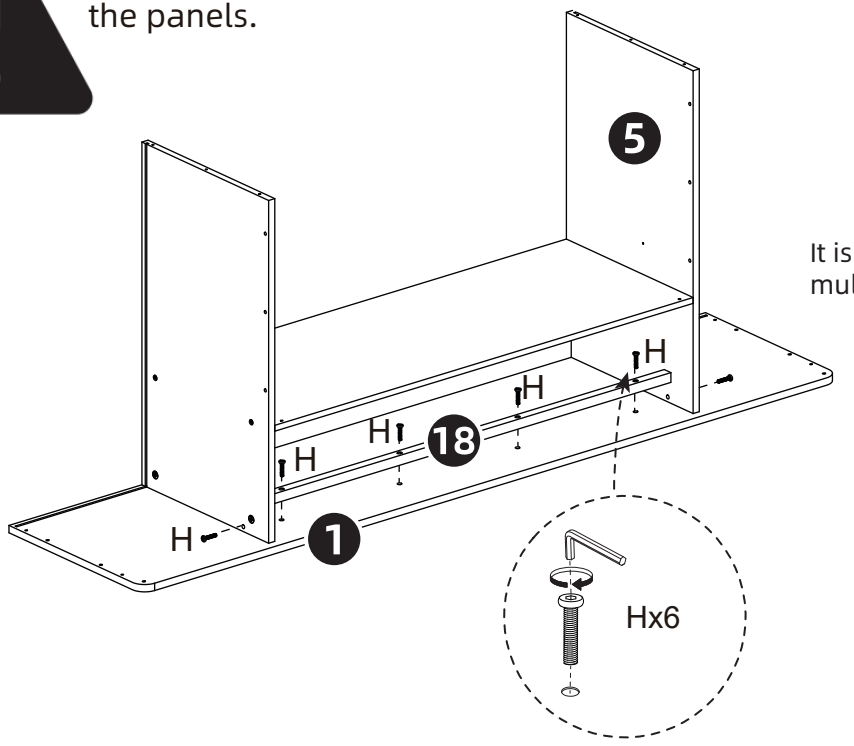



It is recommended to install by multiple people working together.

H		x6
P		

Assembly Steps(EN)

STEP 9

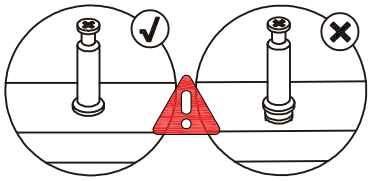

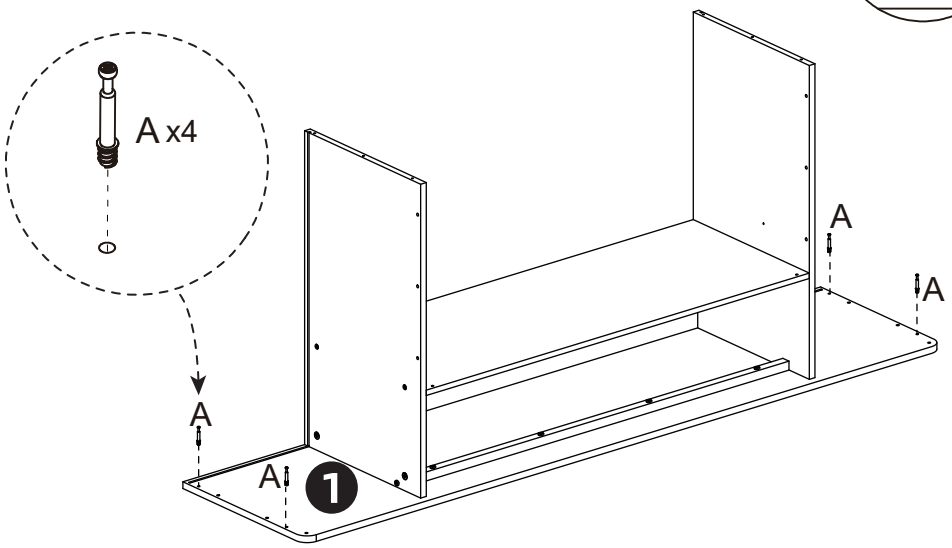

A	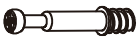	x4
Q		

STEP 10

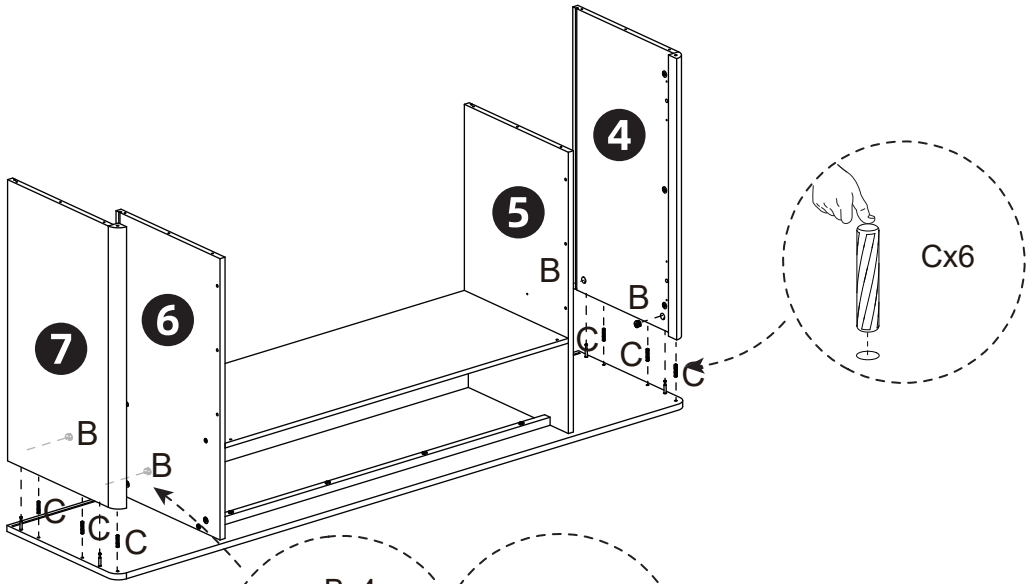

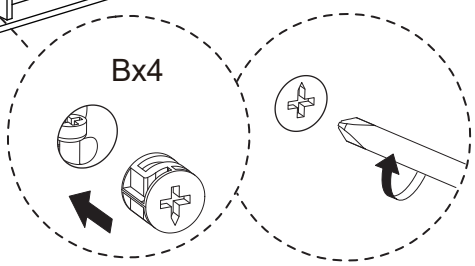

B		x4
C		x6
Q		

Assembly Steps(EN)

STEP 11

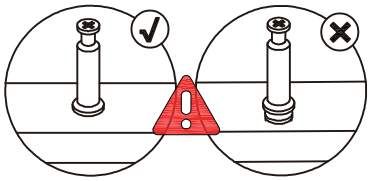

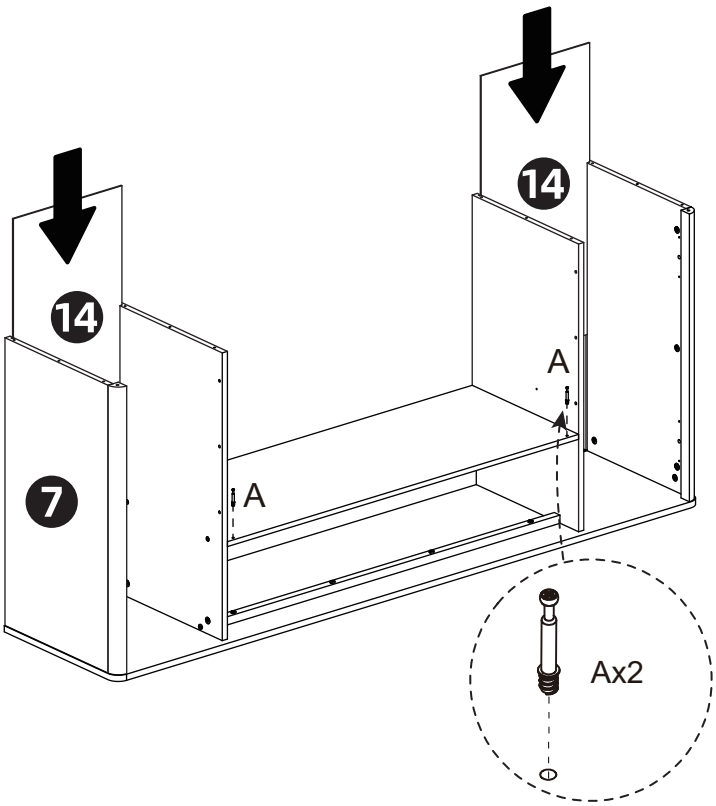

A	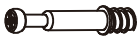	x2
Q		

STEP 12

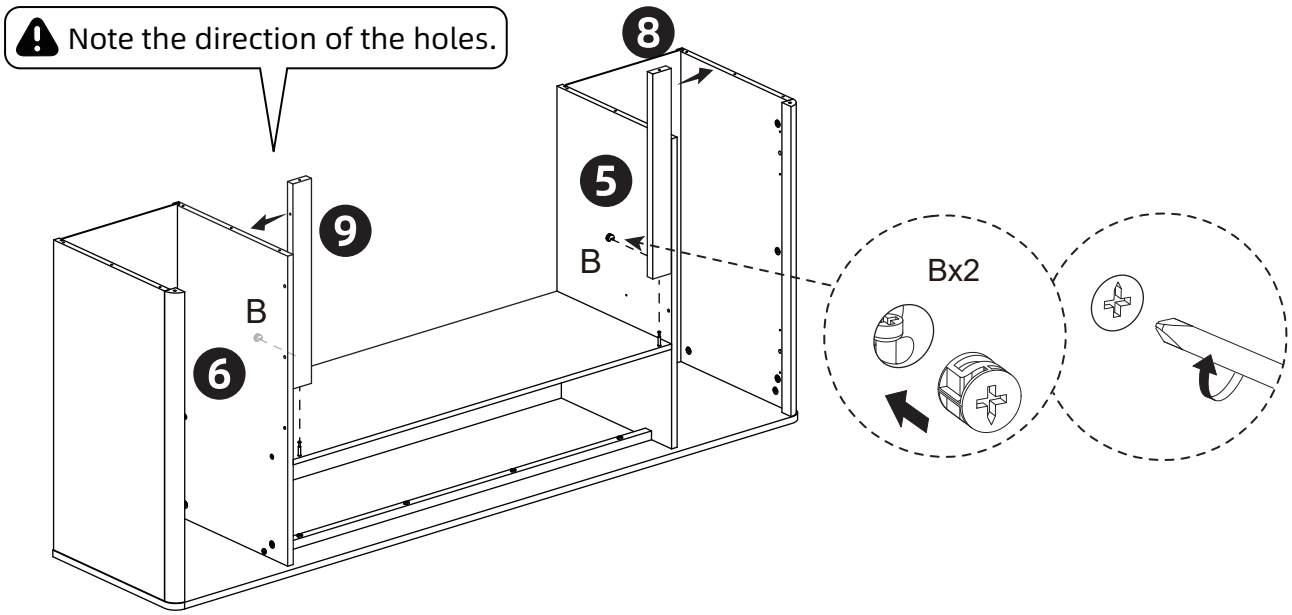

B		x2
Q	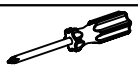	

Assembly Steps(EN)

STEP 13

Please note the installation orientation of Parts 8 and 9. These two parts have pilot holes on their back sides.

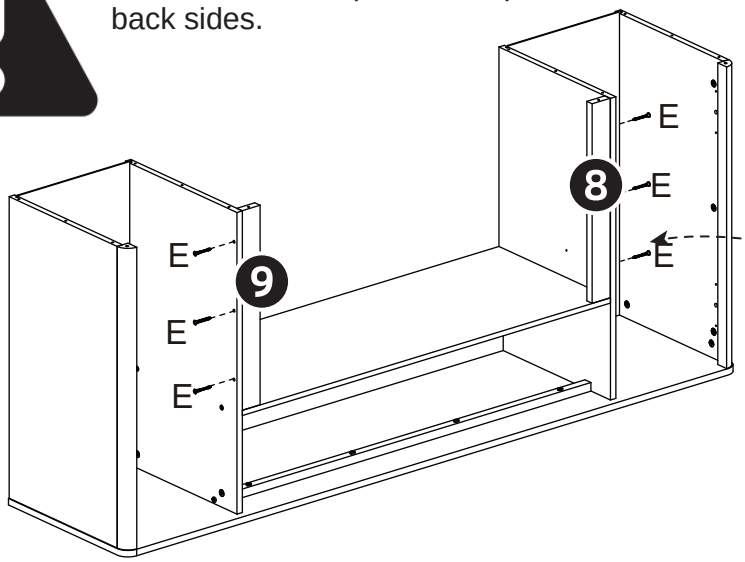

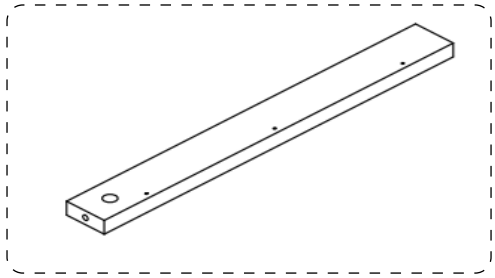

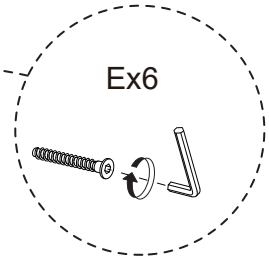

E		x6
O		

STEP 14

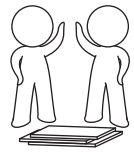

It is recommended to install by multiple people working together.



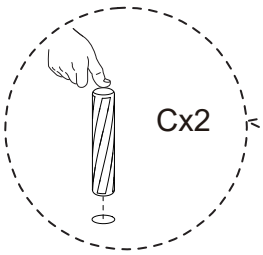

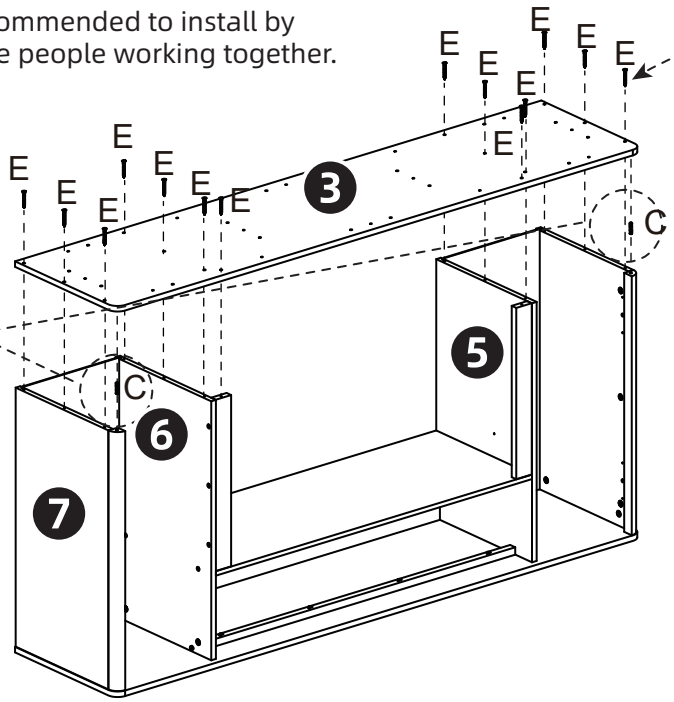

C	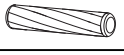	x2
E		x14
O		

Assembly Steps(EN)

STEP 15

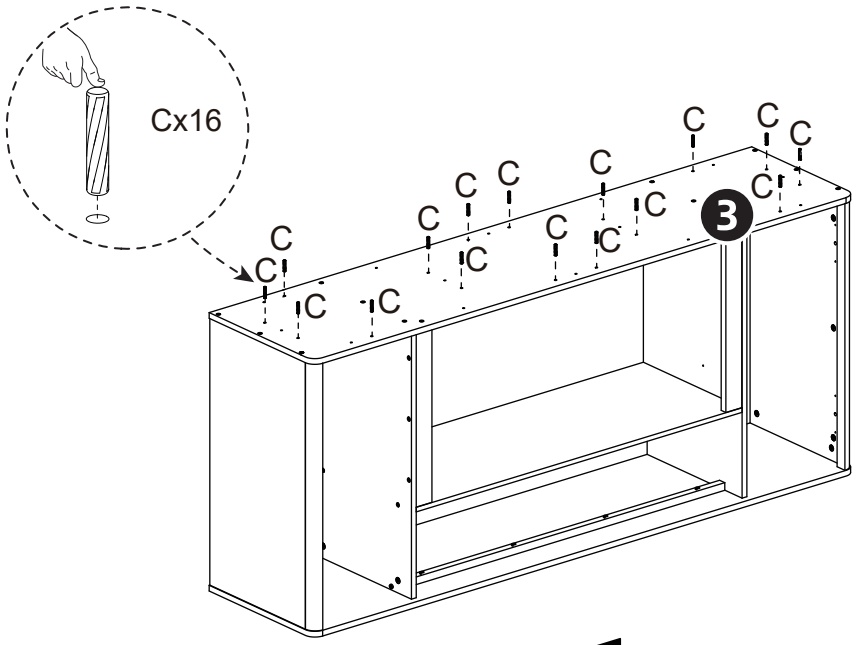

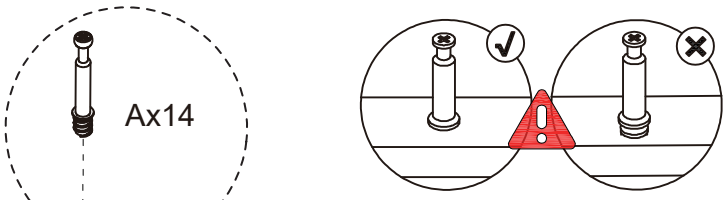

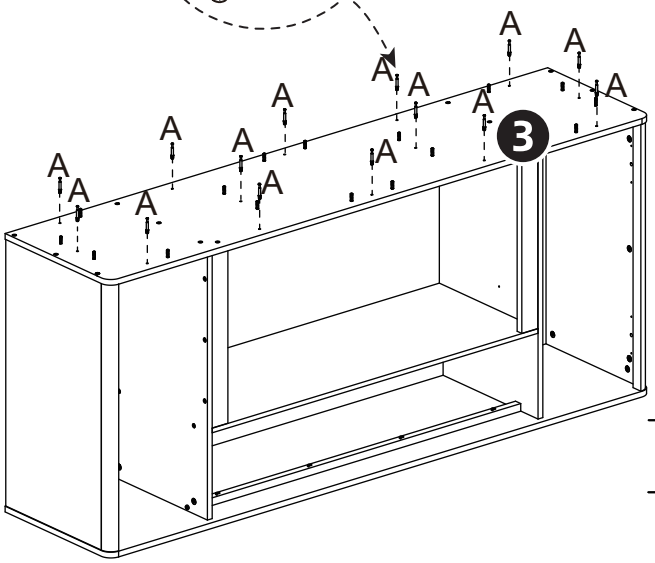

A	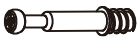	x14
C		x16
Q		

Assembly Steps(EN)

STEP 16

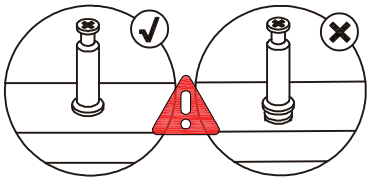

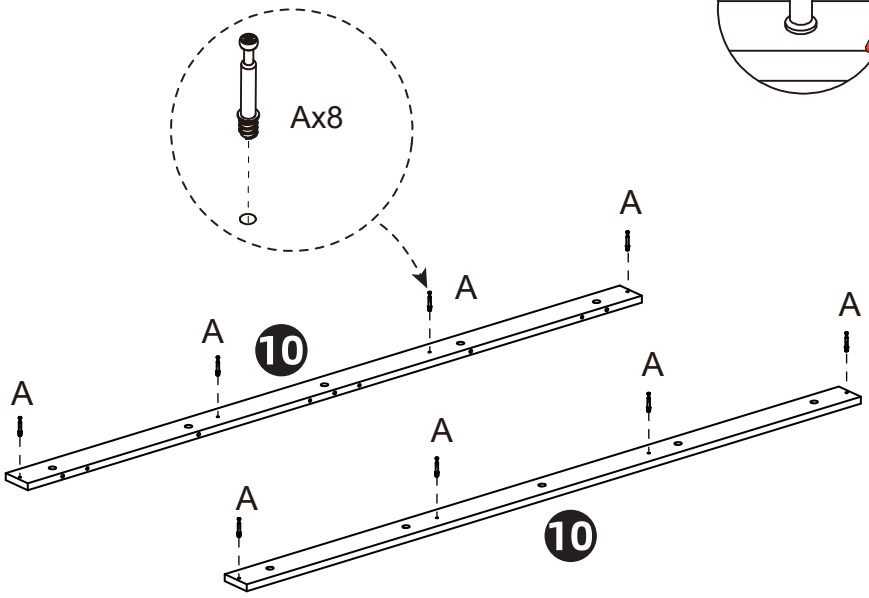

A	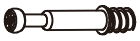	x8
Q		

STEP 17

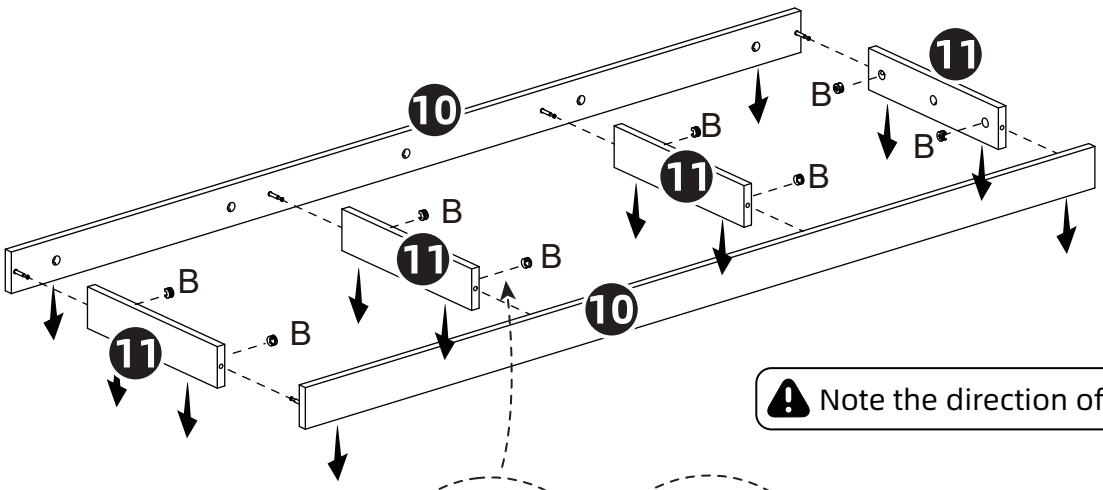

Note the direction of the holes.

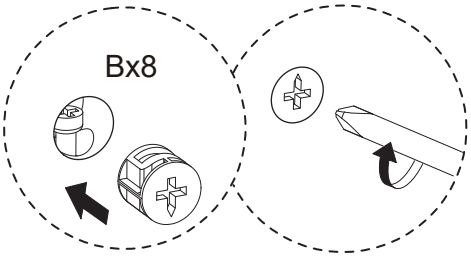

B		x8
Q	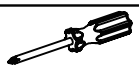	

Assembly Steps(EN)

STEP 18

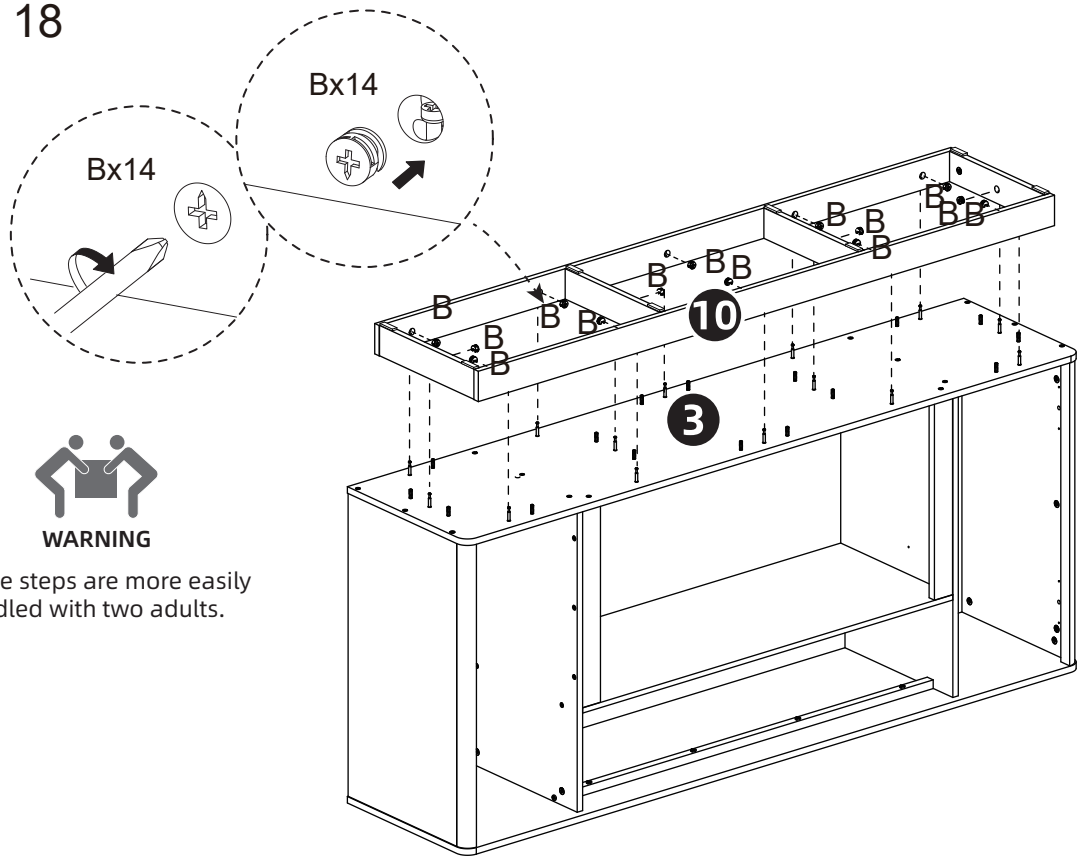

WARNING

Some steps are more easily handled with two adults.

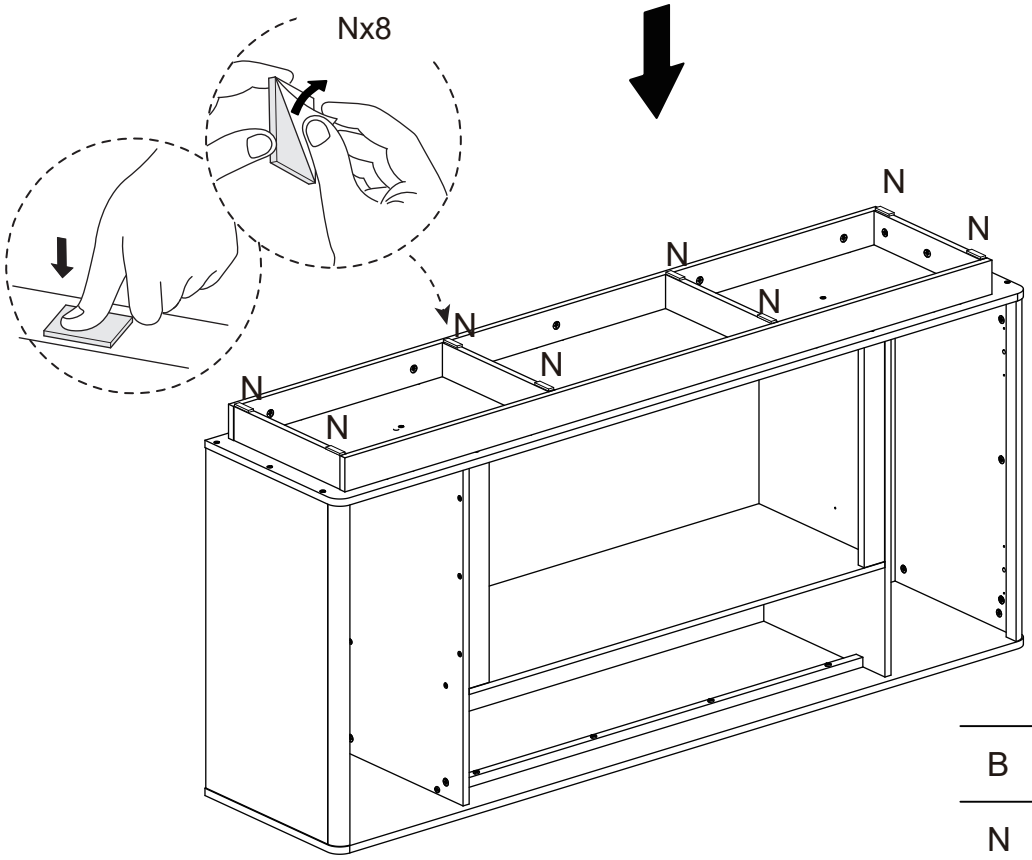

B		x14
N		x8
Q		

Assembly Steps

STEP 19

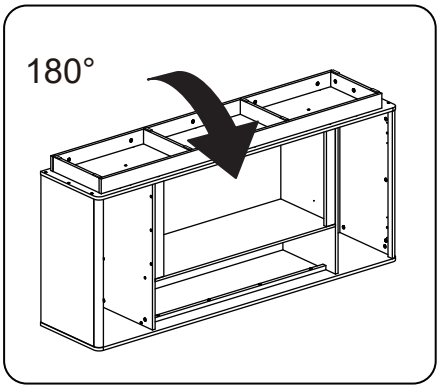

To ensure better structural stability of your product, fit the back panel catches as shown in the diagram. If this step is skipped, the product may become structurally unstable.

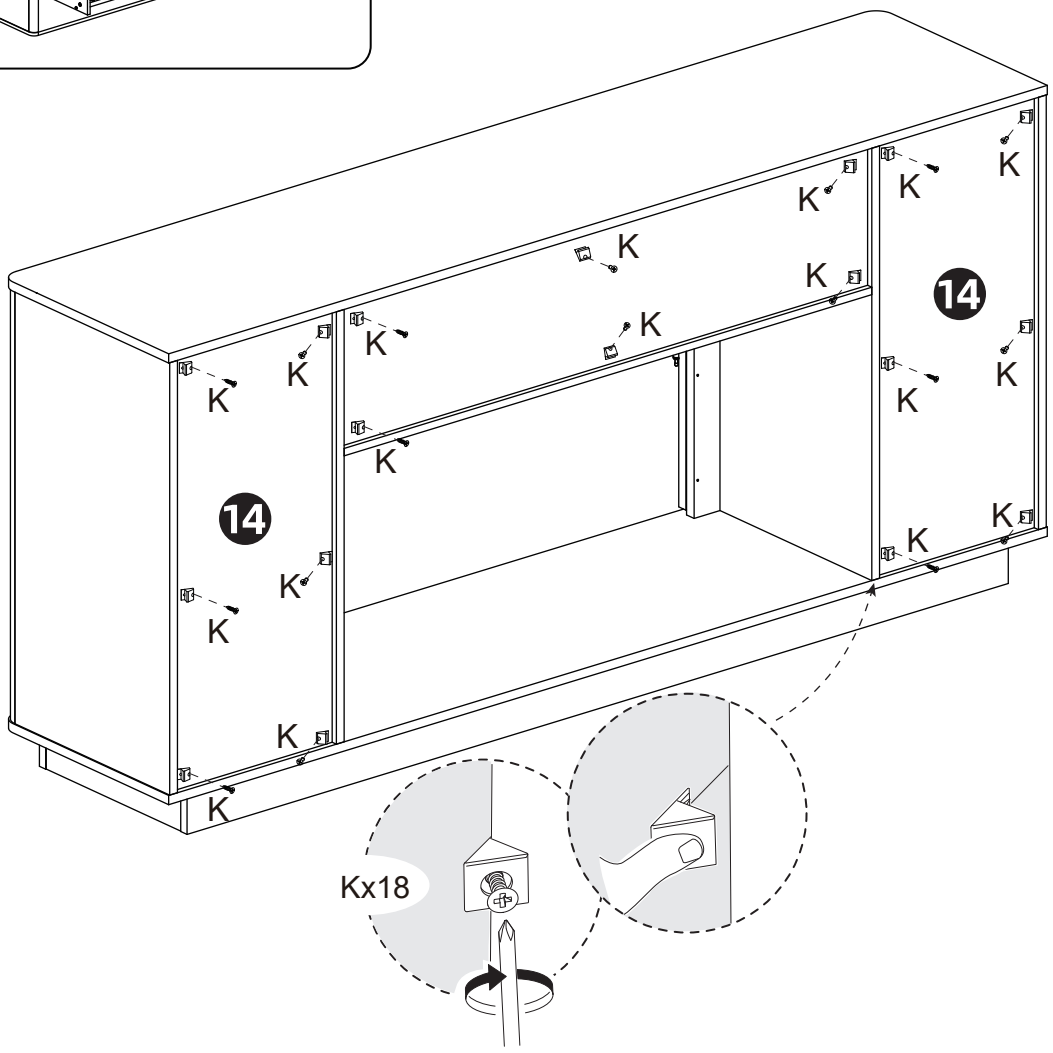

K		x18
Q		

Assembly Steps(EN)

STEP 20

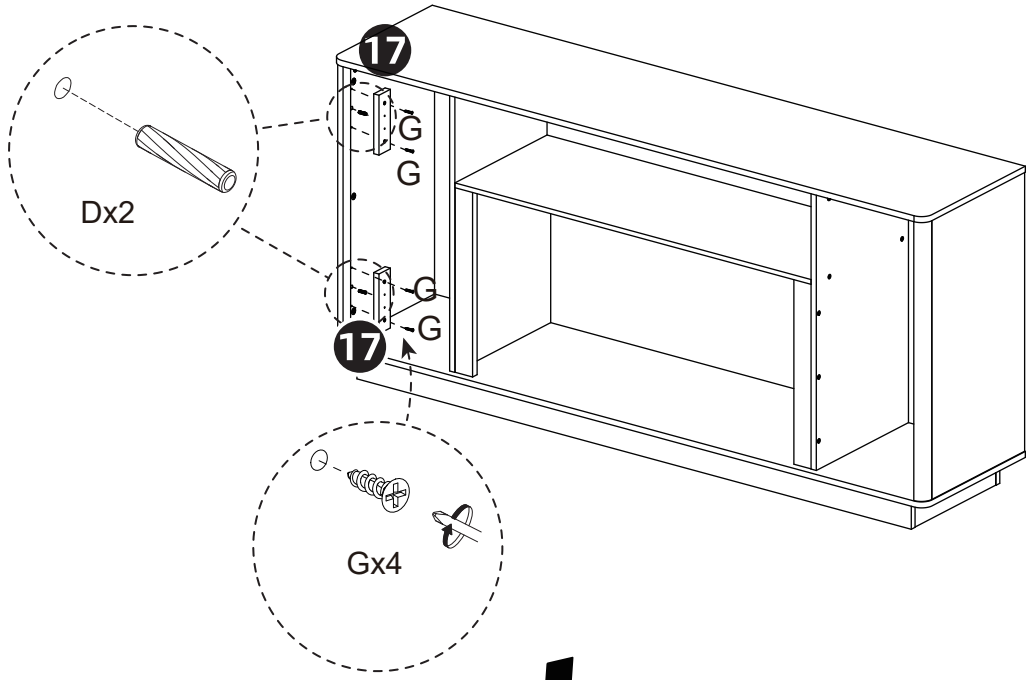

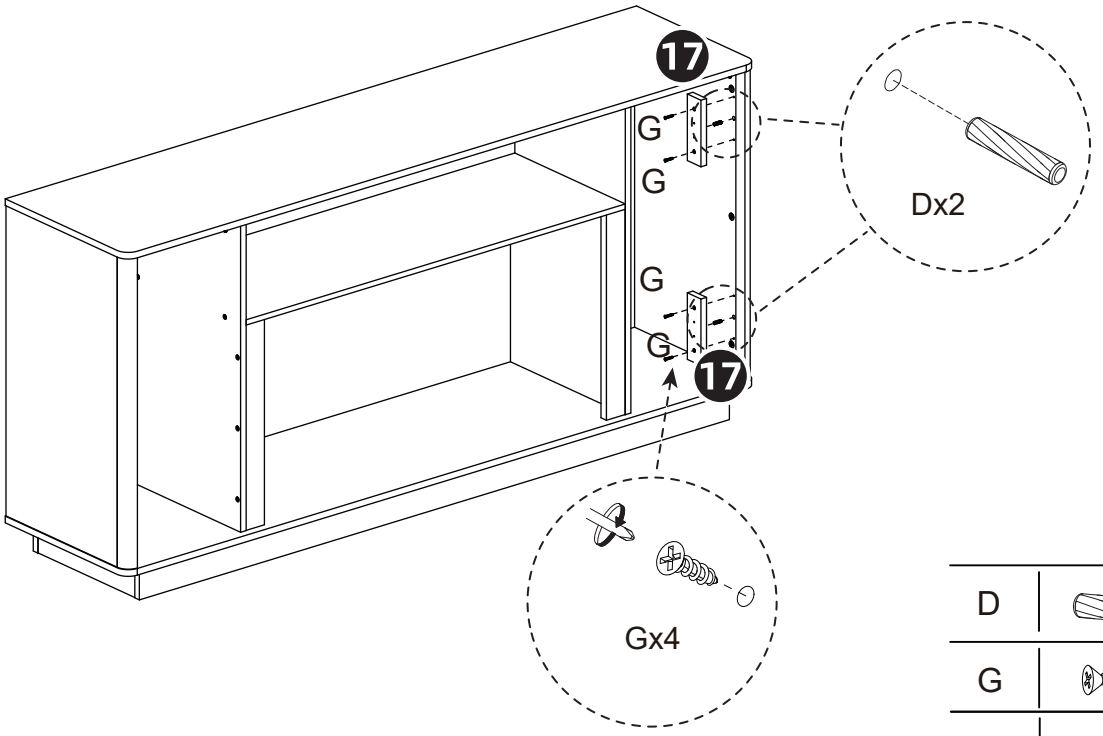

D		x4
G		x8
Q		

If you encounter the following situation, please follow the steps to correct it.

1.The function of the front screw is to adjust the size of the gap between the door and the side panel.

2.The function of the rear screw is to adjust the distance between the front and rear of the door.

Scan the QR code to get the hinge video installation method

Assembly Steps(EN)

A.When the door protrudes beyond the front edge of the side panel.

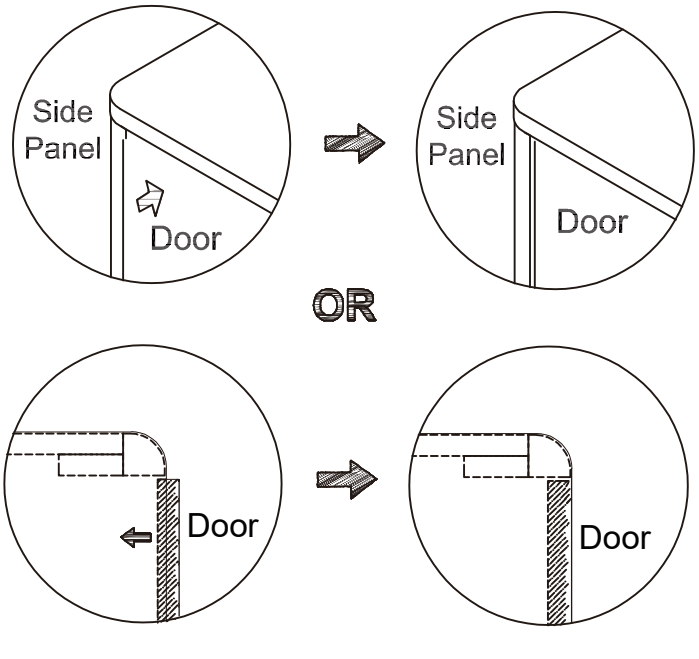

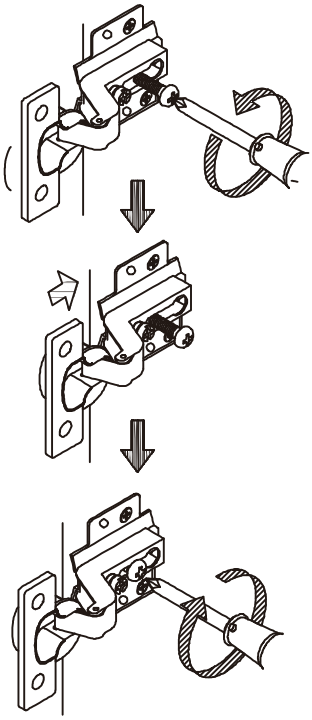

If the gap is too big between side panel and door or the door is over the edge of side panel, loosen the back screw as shown, then move in the door with hinge and tighten the back screw as shown when the gap is just well.

B.When the door is recessed behind the front edge of the side panel.

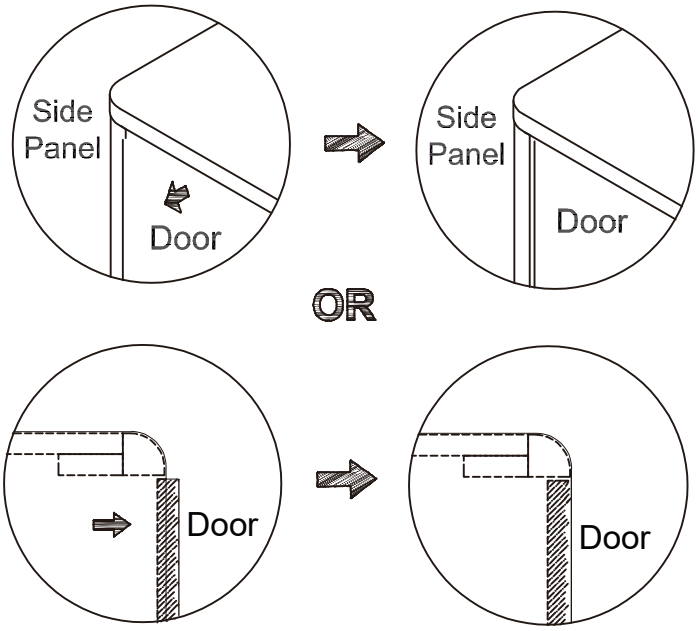

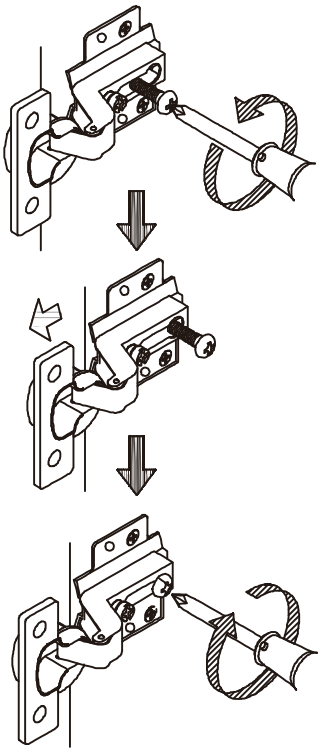

If the gap is too small between side panel and door or the door sank in side panel, loosen the back screw as shown, then move out the door with hinge and tighten the back screw as shown when the gap is just well.

Assembly Steps(EN)

C

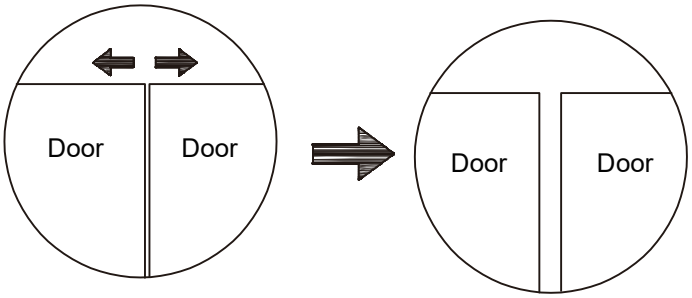

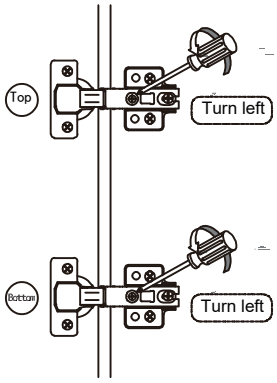

If the gap between the two doors is too small, follow the diagram.

D

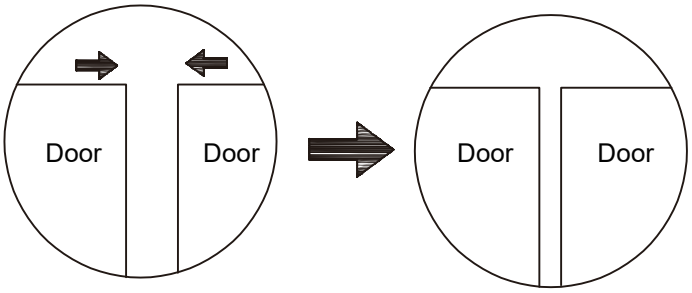

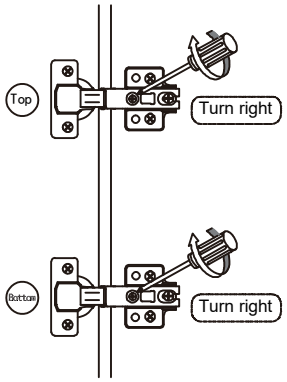

If the gap between the two doors is too large, follow the diagram.

E

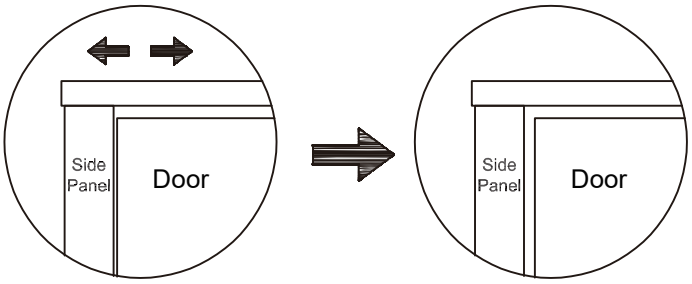

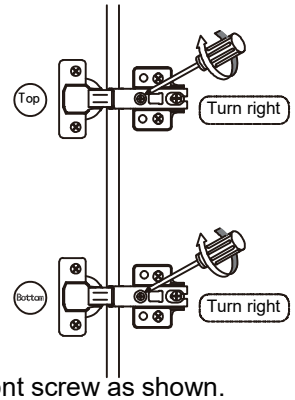

If the gap between the door and the side panel is too small, loosen the front screw as shown.

F

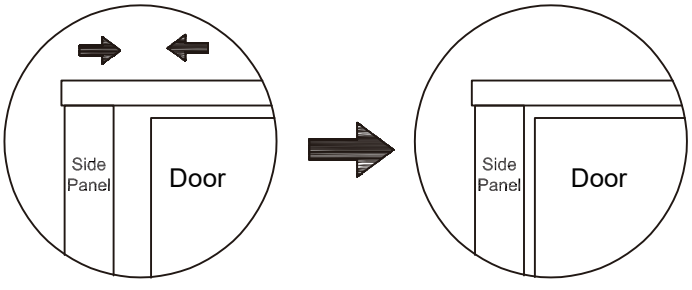

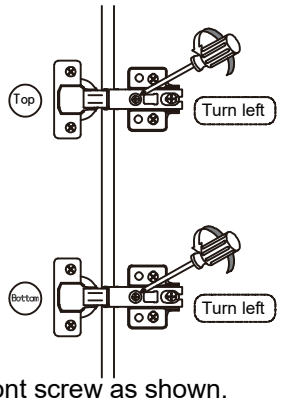

If the gap between the door and the side panel is too large, tighten the front screw as shown.

Assembly Steps(EN)

G.When door is leaning

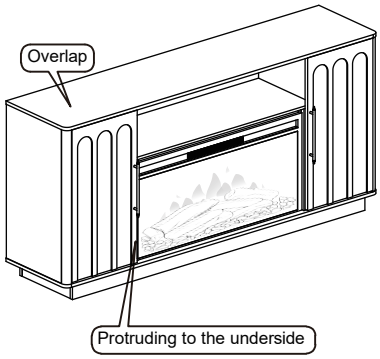

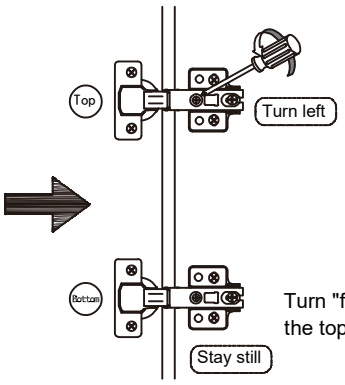

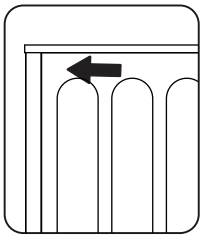

Turn "front screw" to the left can make the top of the door tilted outward.

H .When door is leaning

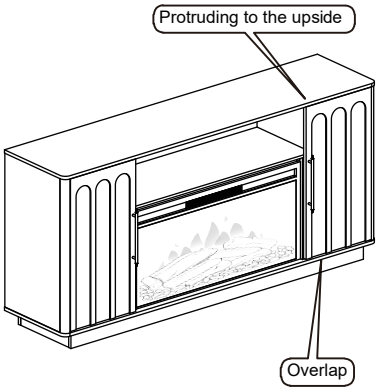

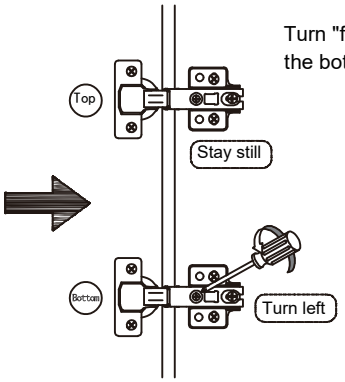

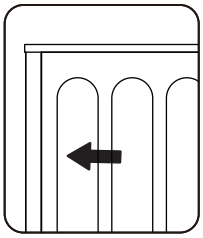

Turn "front screw" to the left can make the bottom of the door tilted outward.

I.When the door is higher on top

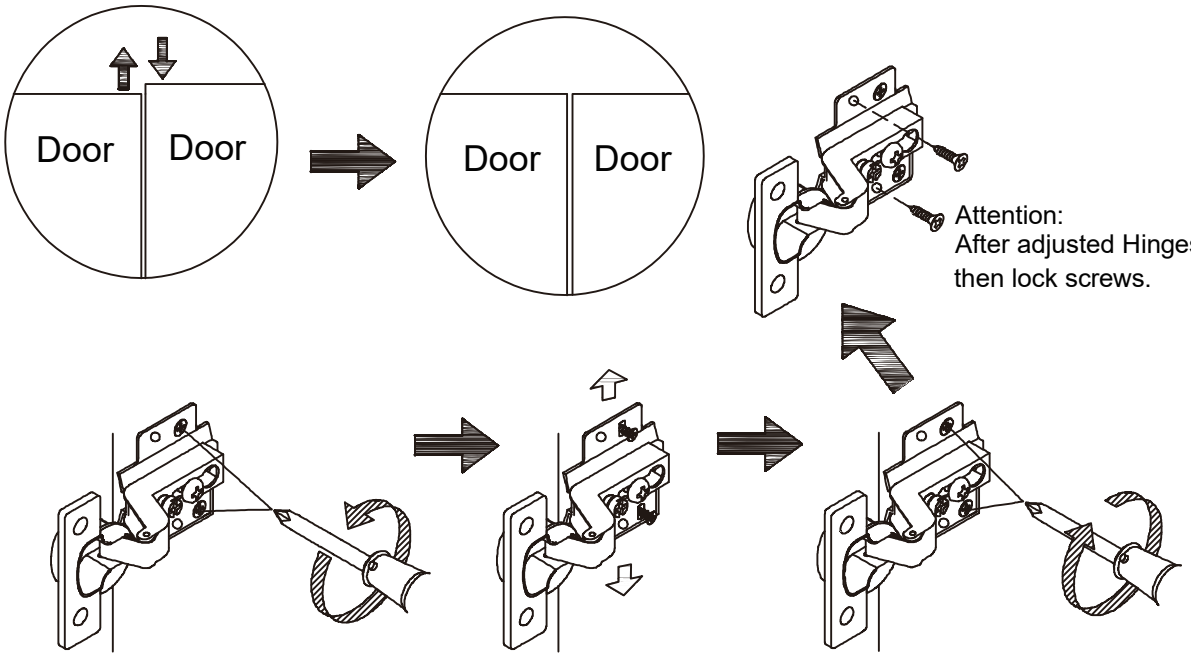

If the doors are not in same level, loosen the back screws on wing, then adjust the door up and down, tighten the screws when both doors are in same level.
Screw front two screws on wing when all are in place.

STEP 21

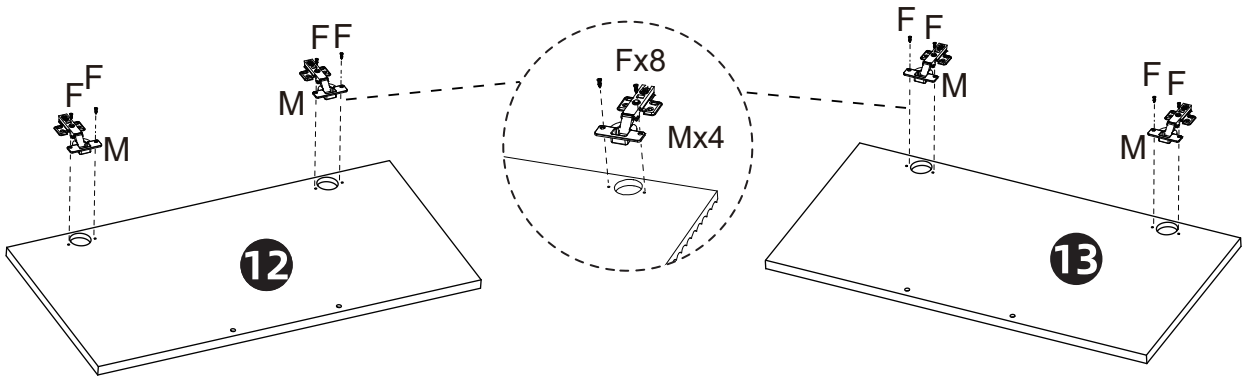

F		x8
M		x4
Q		

STEP 22



First, tighten the two U-shaped holes on the back side of the hinge.

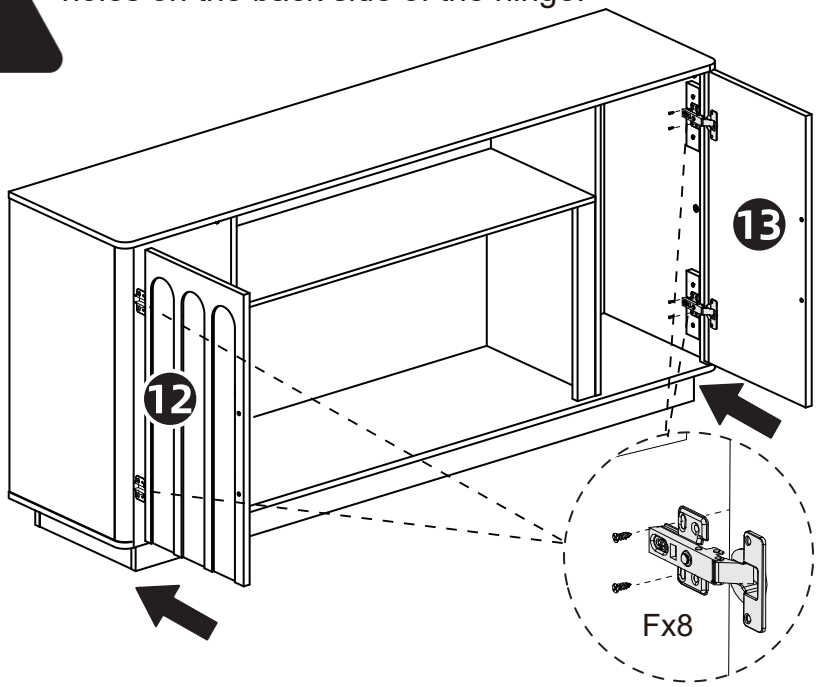

F		x8
Q		

Assembly Steps(EN)

STEP 23

Then lock the two circular holes on the front side of the hinge.

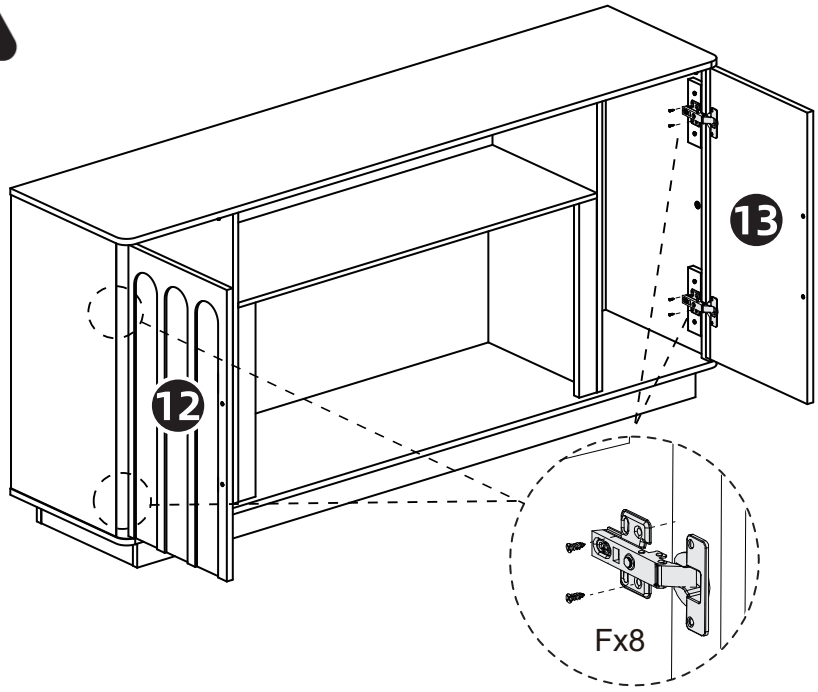

F		x8
Q		

STEP 24

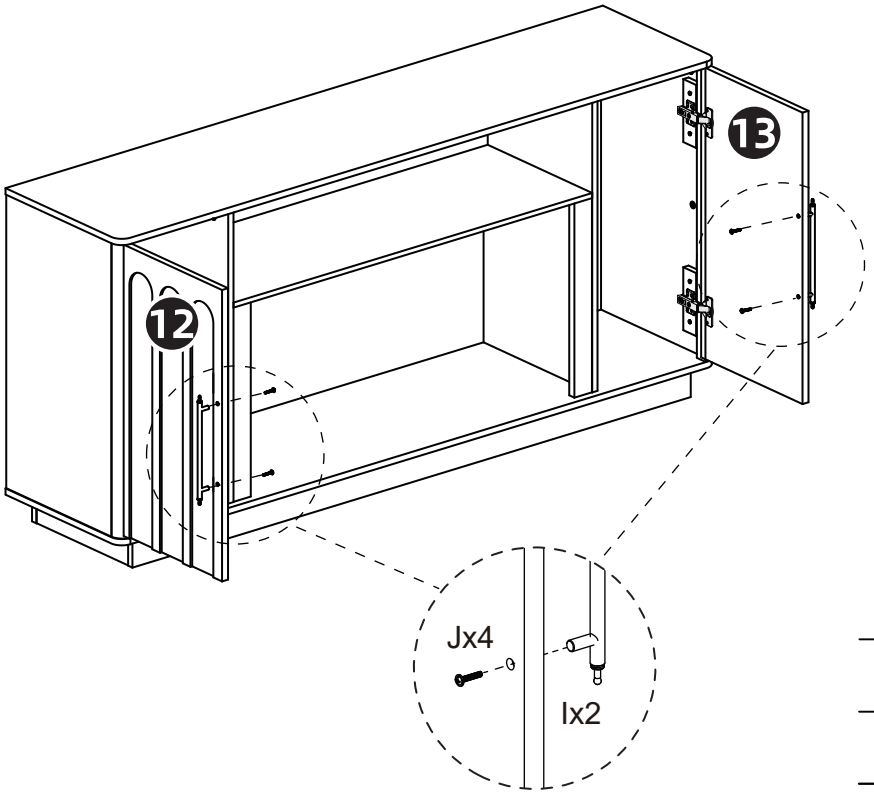

I		x2
J		x4
Q		x1

Assembly Steps(EN)

STEP 25

Do not discard the two removed screws; they will be required in subsequent steps.

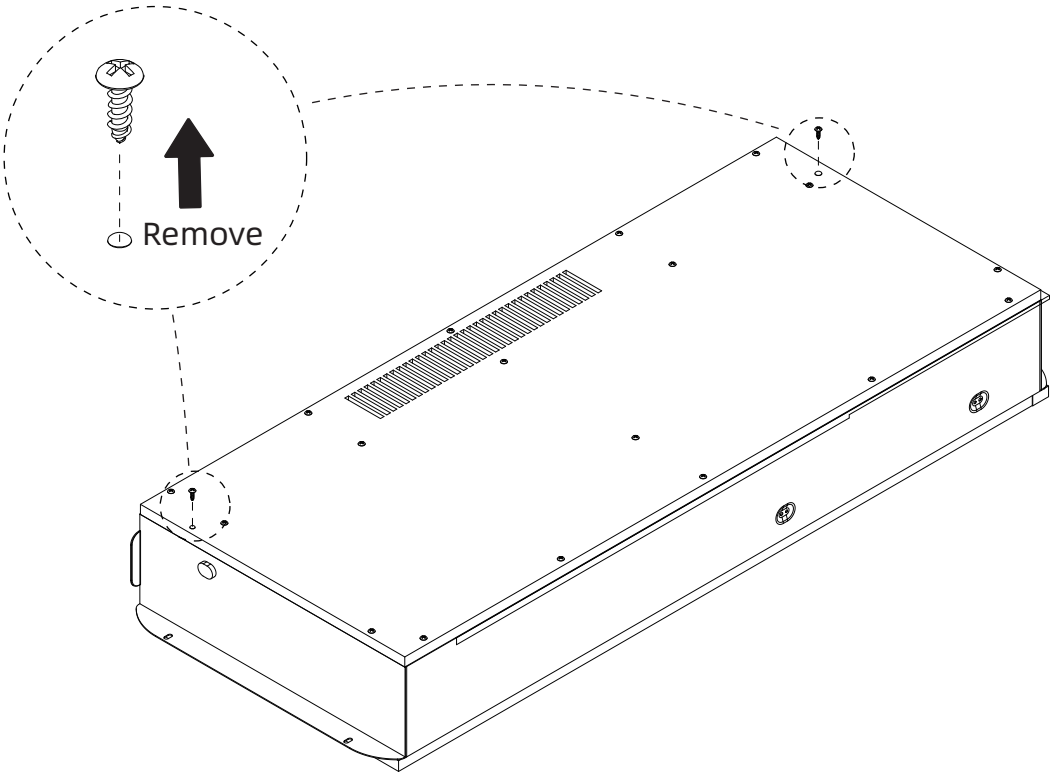

Assembly Steps(EN)

STEP 26

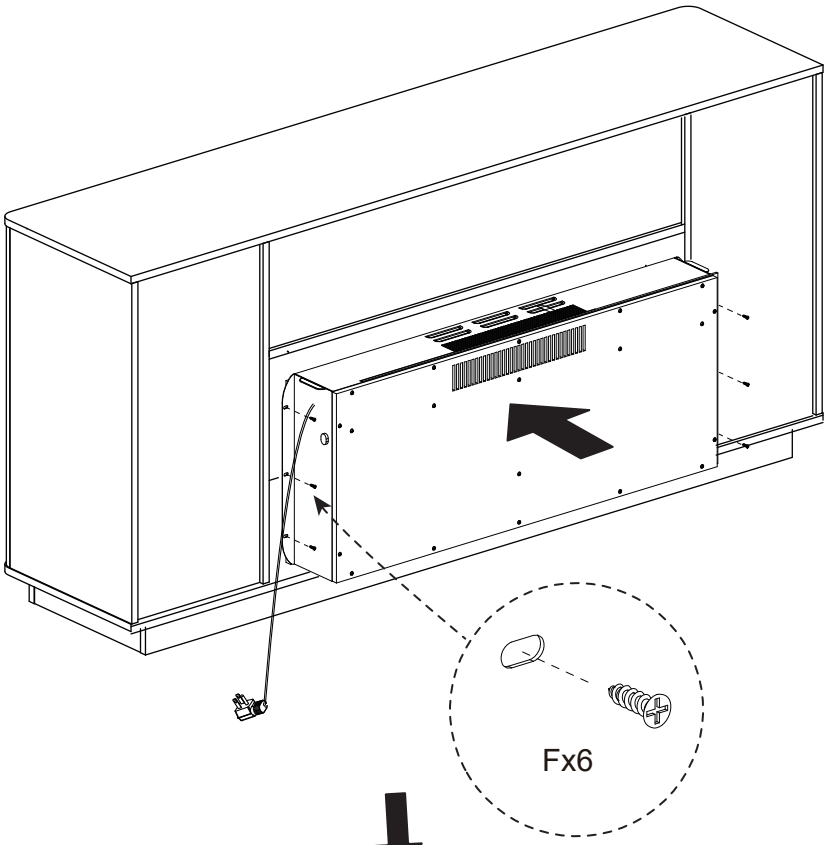

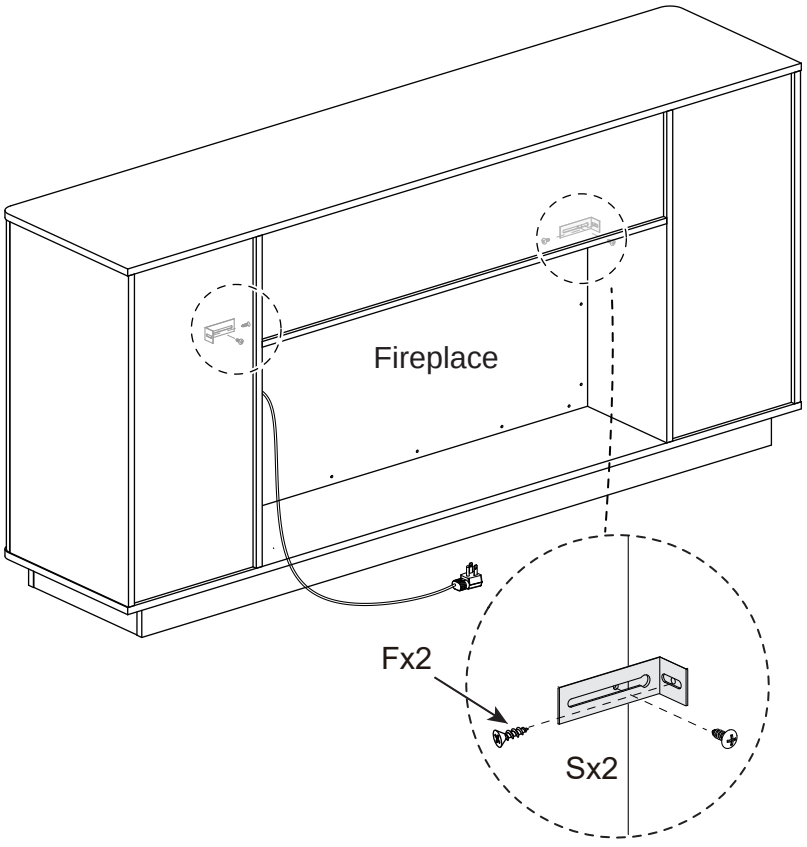

Reinstall the two screws removed in Step 25 to secure the fireplace insert.

F		x8
S		x2
Q		

Assembly Steps(EN)

STEP 27

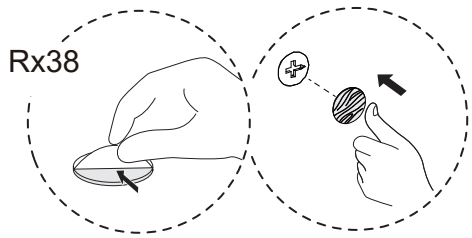

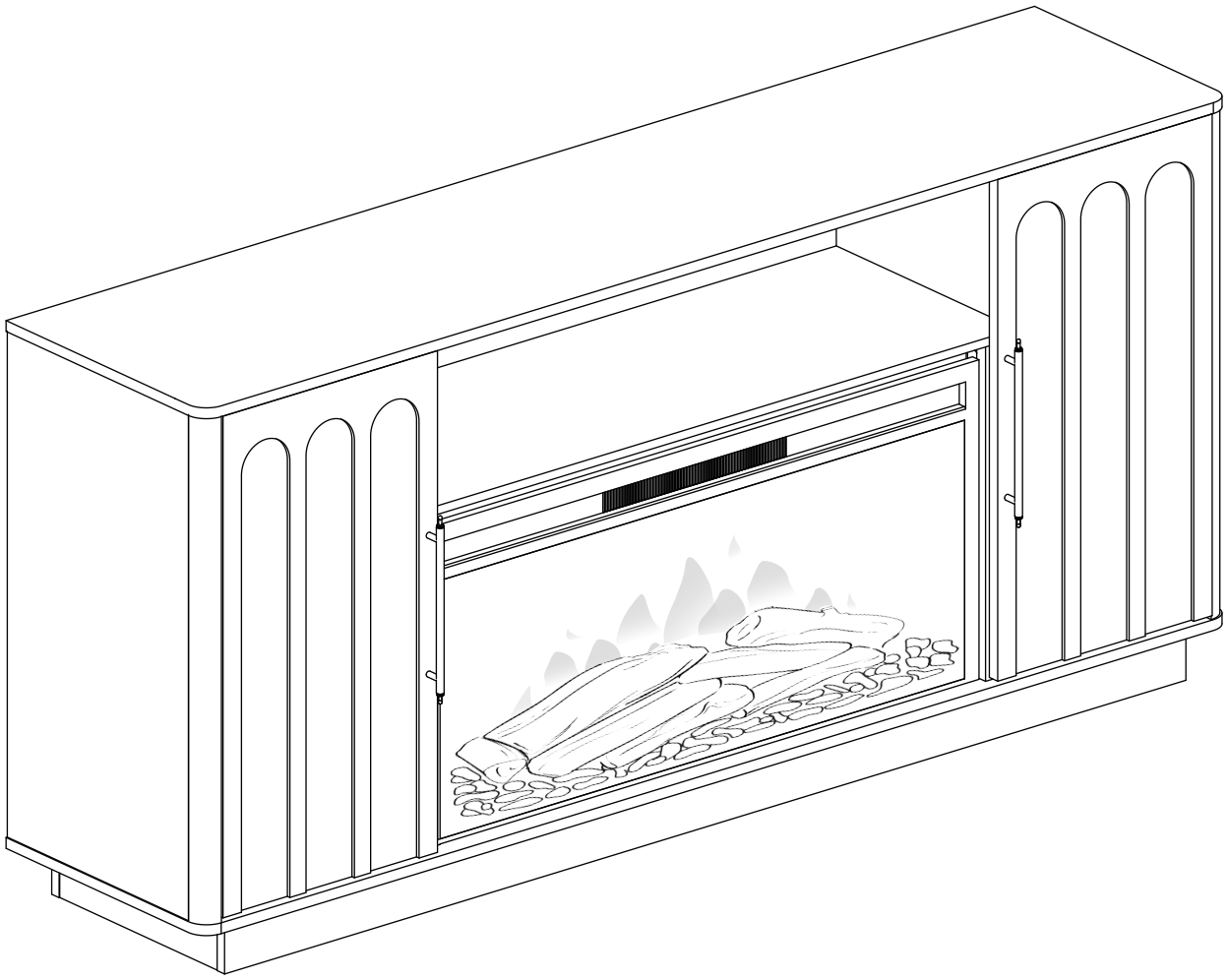

According to your personal needs, you can use the R# sticker to cover the screws.

R		x38

Assembly Steps(EN)

STEP 28

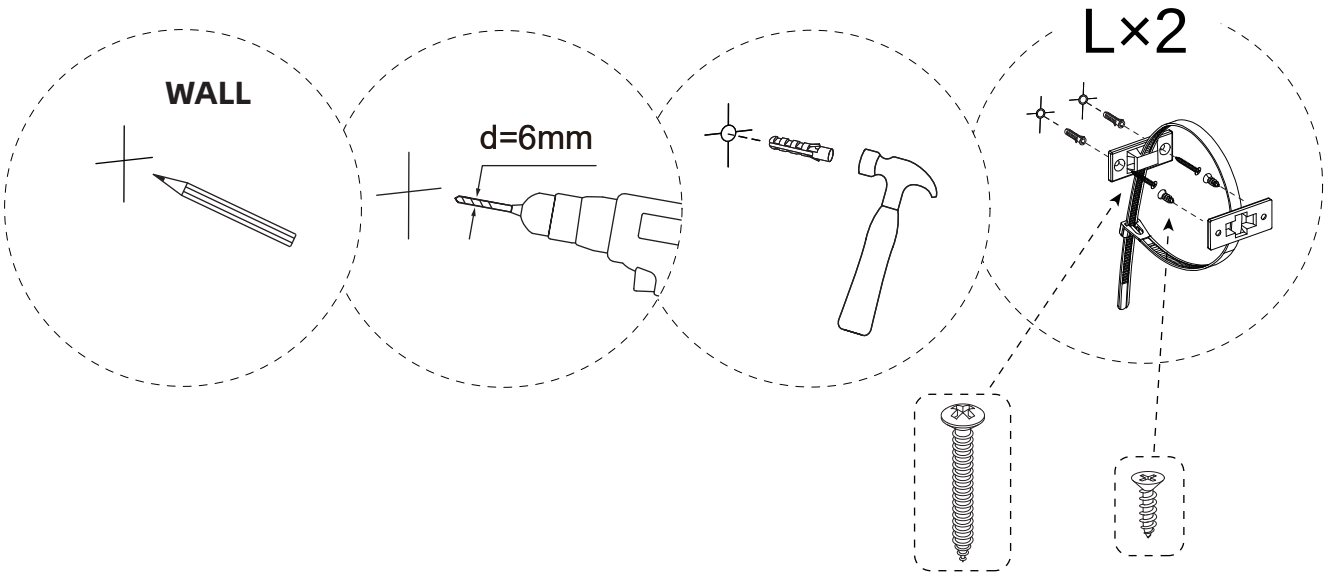

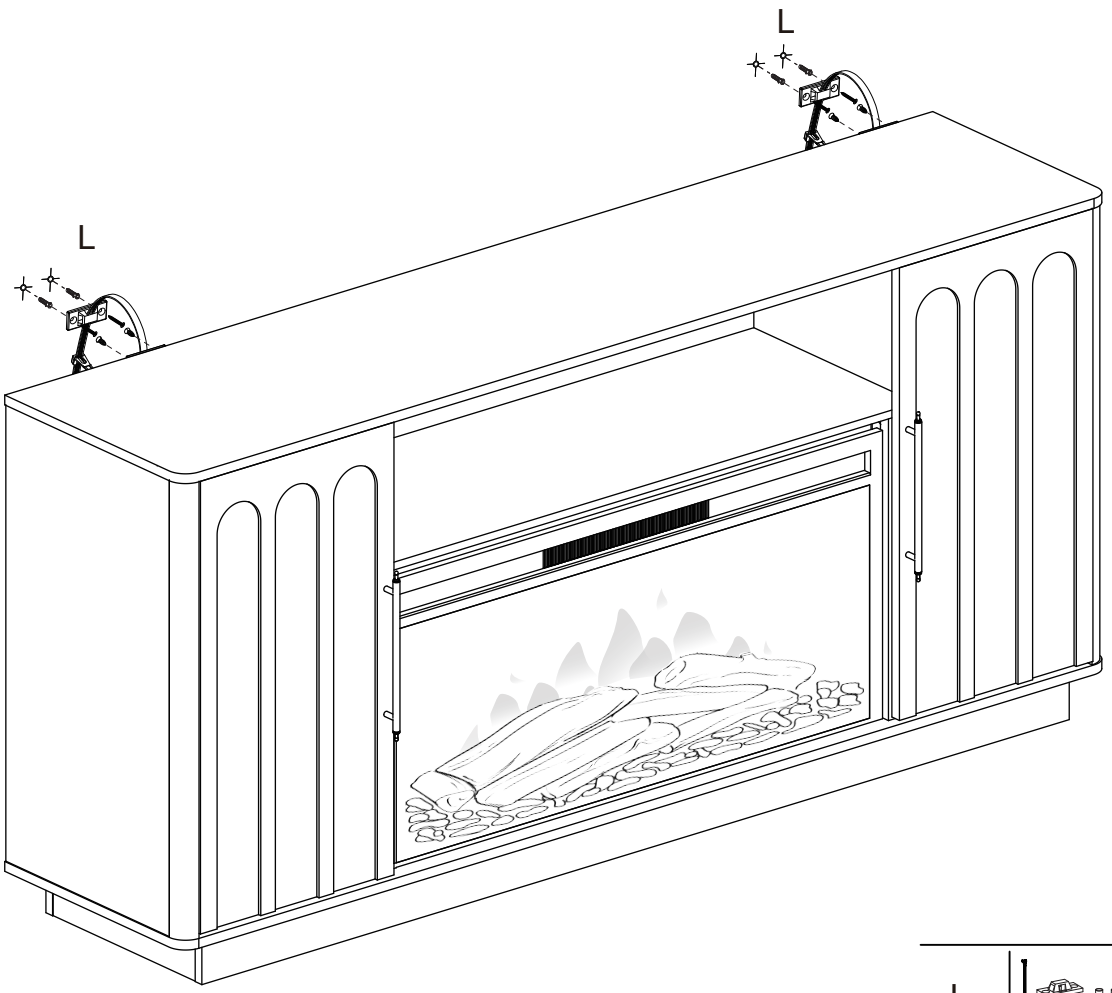

L	x2
Q	x1