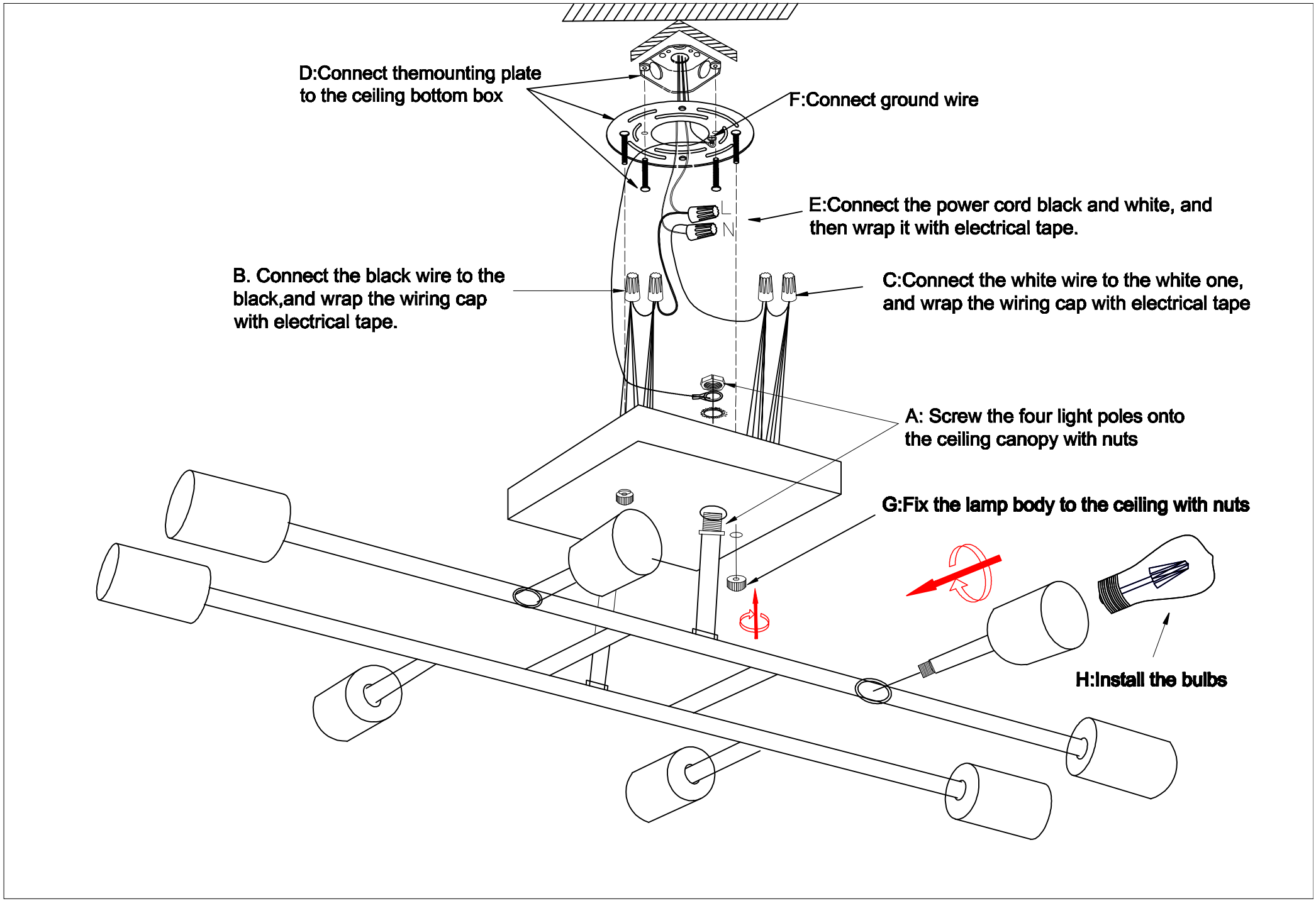
D:Connect themounting plate
to the ceiling bottom box
F:Connect ground wire
L
N
E:Connect the power cord black and white, and
then wrap it with electrical tape.
B. Connect the black wire to the
black,and wrap the wiring cap
with electrical tape.
C:Connect the white wire to the white one,
and wrap the wiring cap with electrical tape
A: Screw the four light poles onto
the ceiling canopy with nuts
G:Fix the lamp body to the ceiling with nuts
H:Install the bulbs