Bed Frame

SE-07.07A

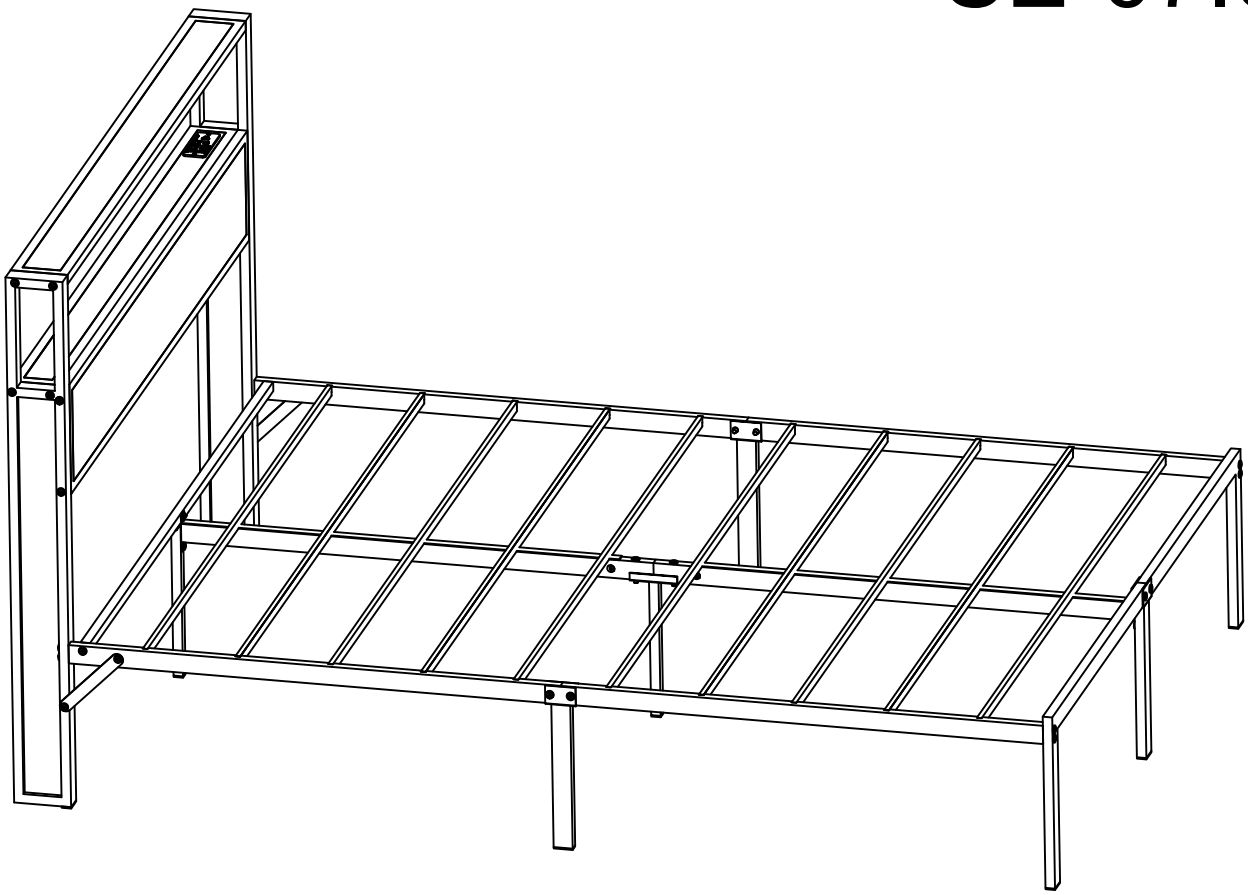

Model: T3963P447321

Please Scan the QR code to watch the tutorial video

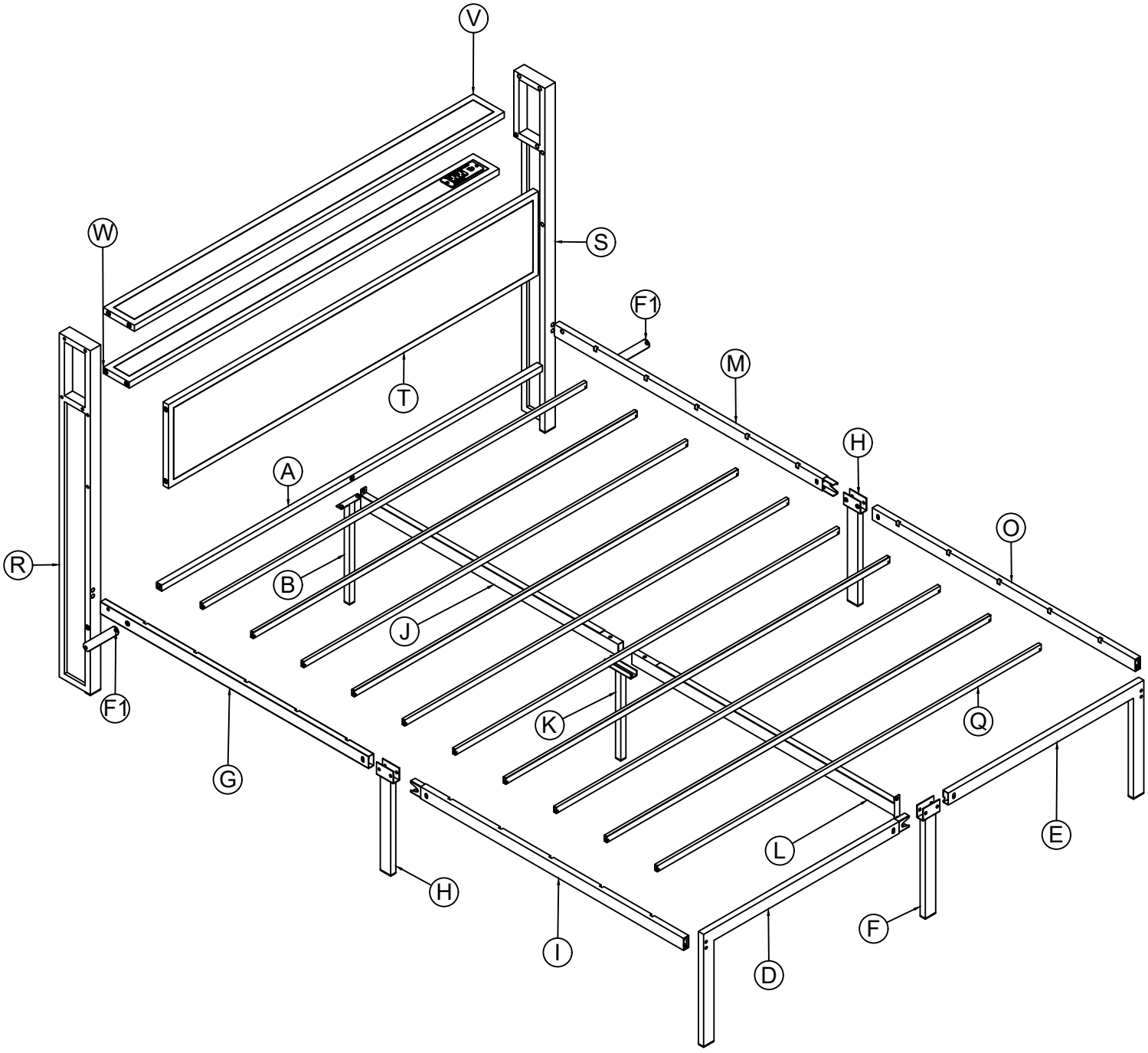
V
W
S
F1
T
M
H
A
O
R
B
J
F1
K
Q
G
H
L
E
I
F
D

Parts List:

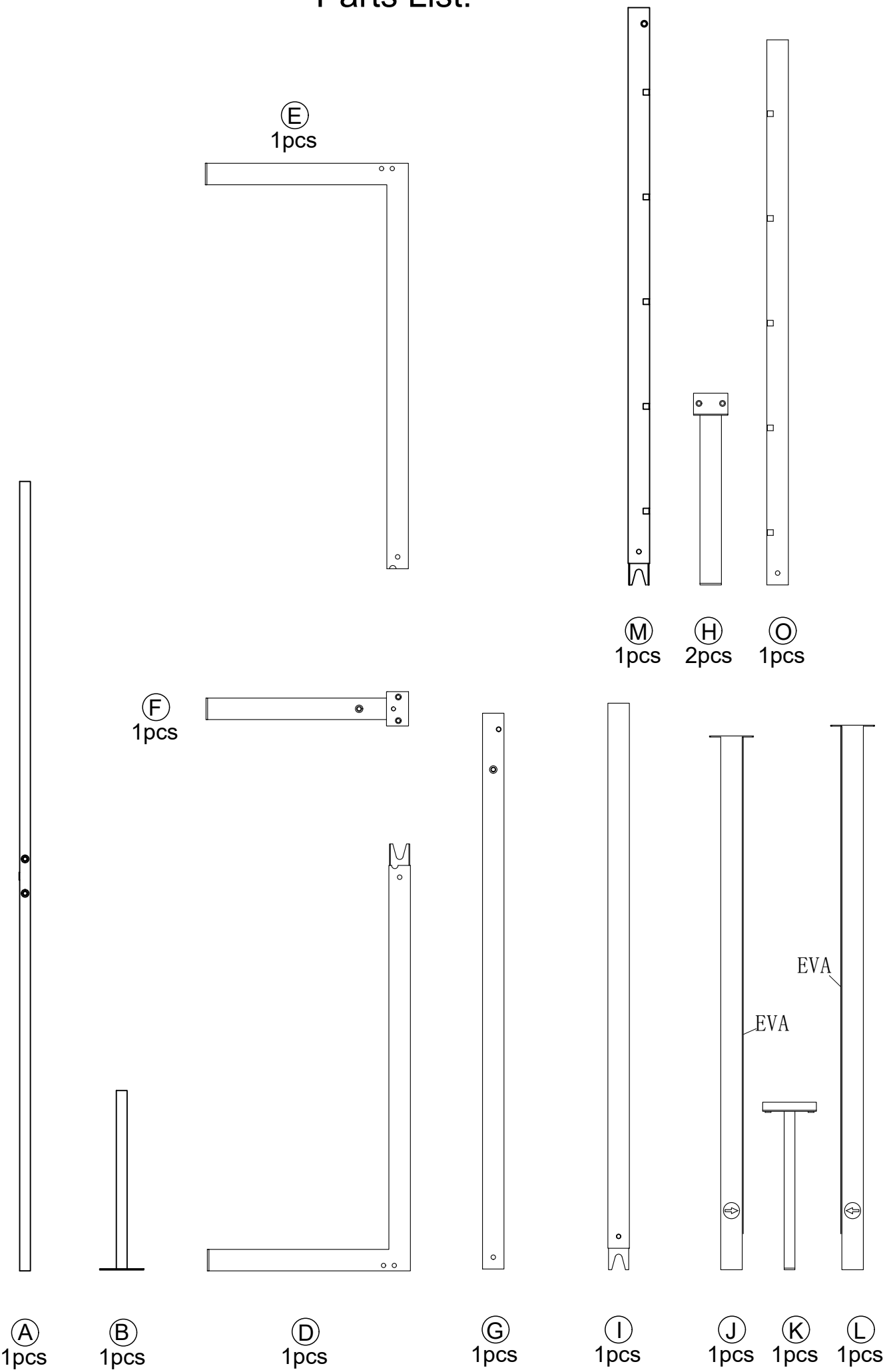
E
1pcs
M
1pcs
H
2pcs
O
1pcs
F
1pcs
EVA
EVA
A
1pcs
B
1pcs
D
1pcs
G
1pcs
I
1pcs
J
1pcs
K
1pcs
L
1pcs

Parts List:

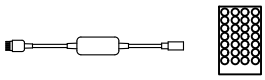

X
1pcs



M6x35mm
D1
2pcs



M8x55mm
B1
14pcs



M8x15mm
C1
10pcs



M8x30mm
C2
2pcs

M8x35mm
E1
12pcs



M4x10mm
J1
2pcs



F1
2pcs

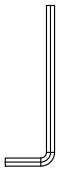

G1
1pcs

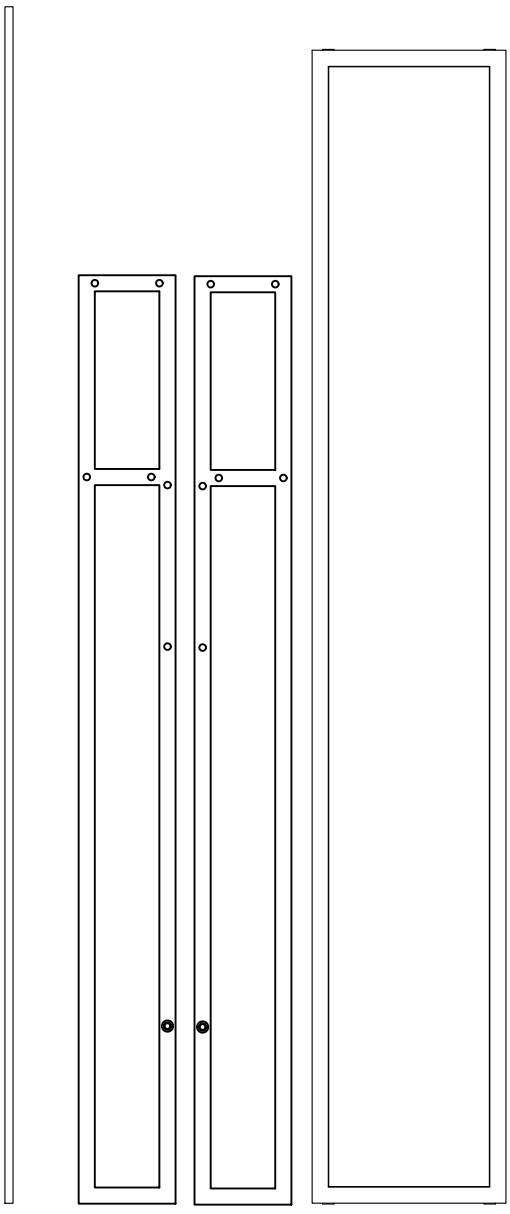

Q
10pcs

R
1pcs

S
1pcs

T
1pcs

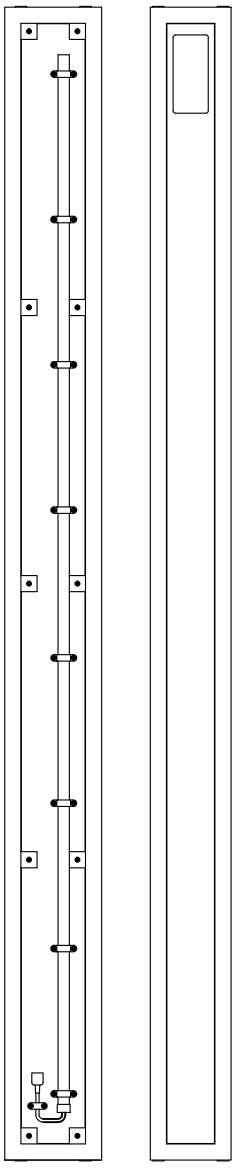

V
1pcs

W
1pcs

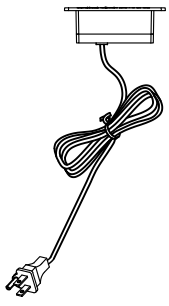

H1
1pcs

STEP 1

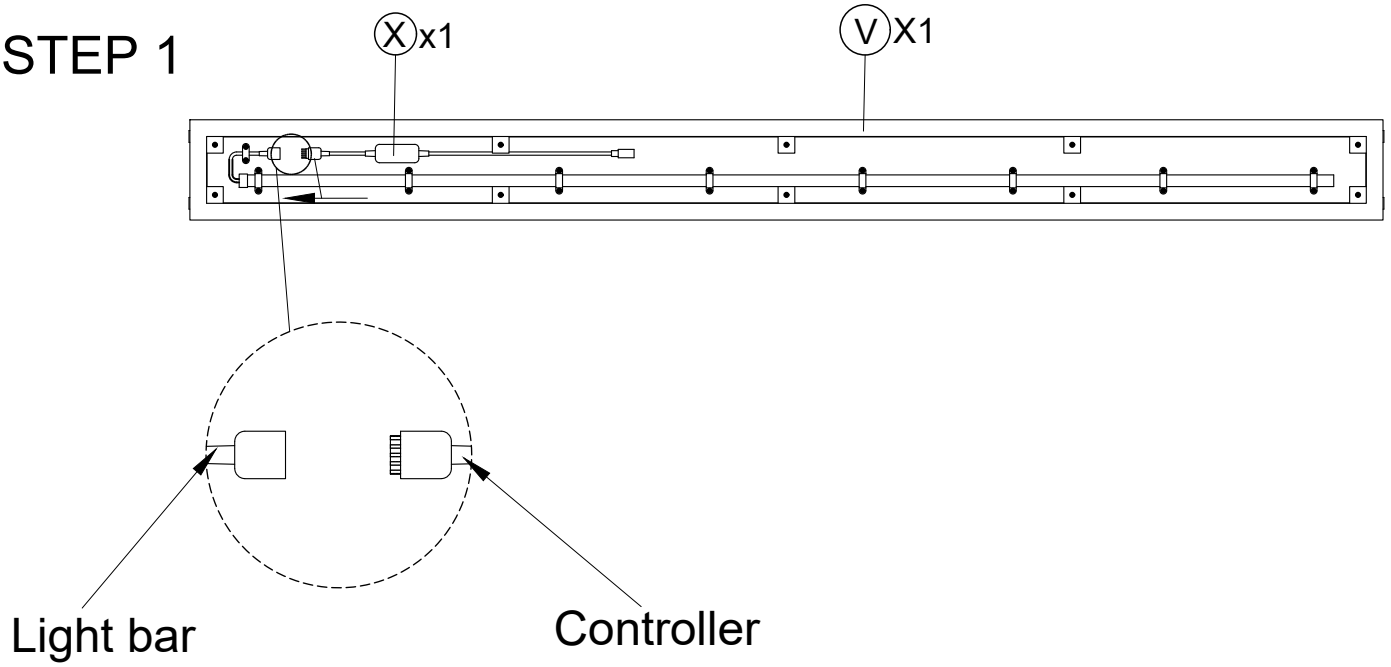

STEP 2

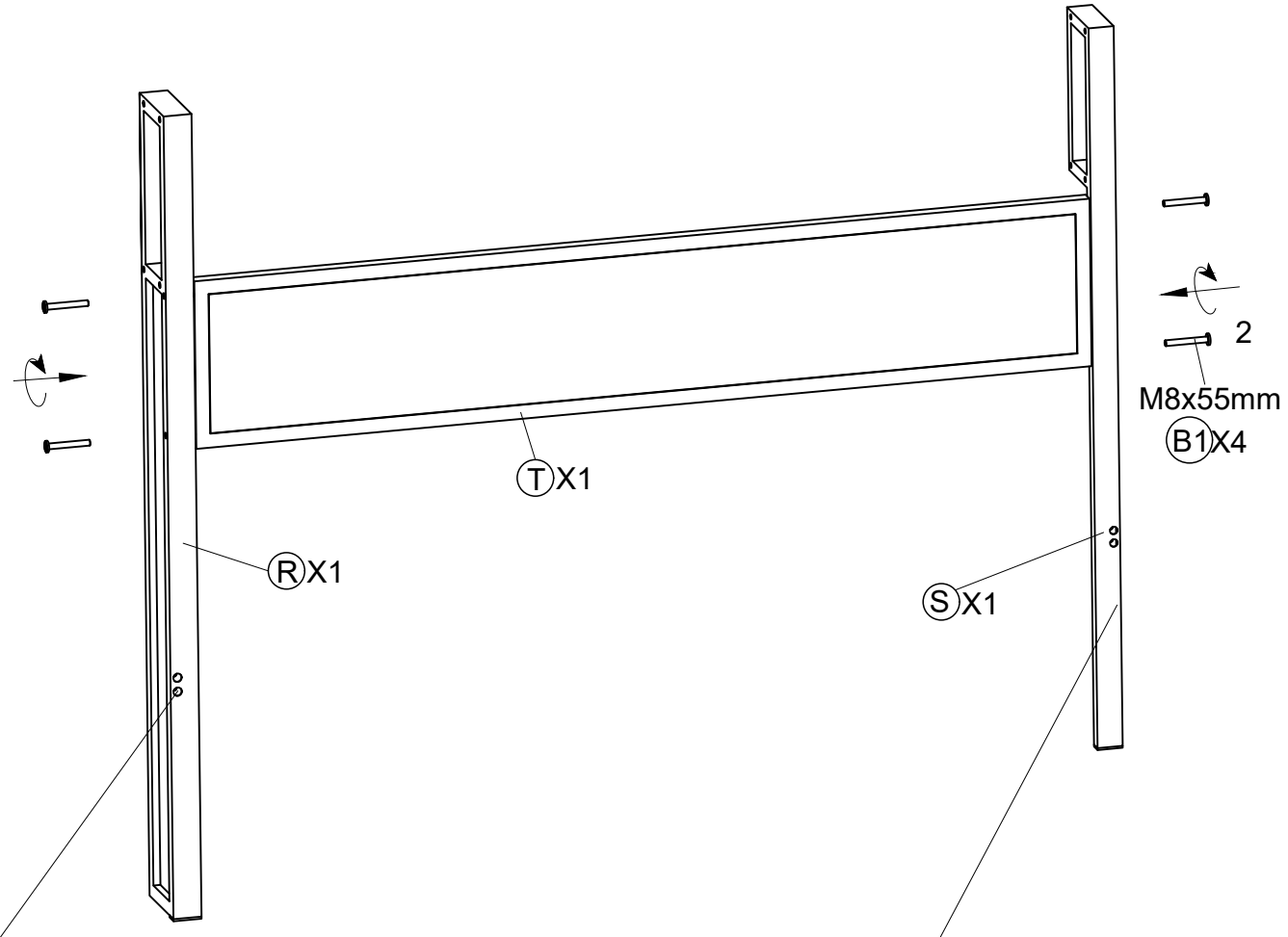

The two holes are near the outside

The two holes are near the outside

STEP3

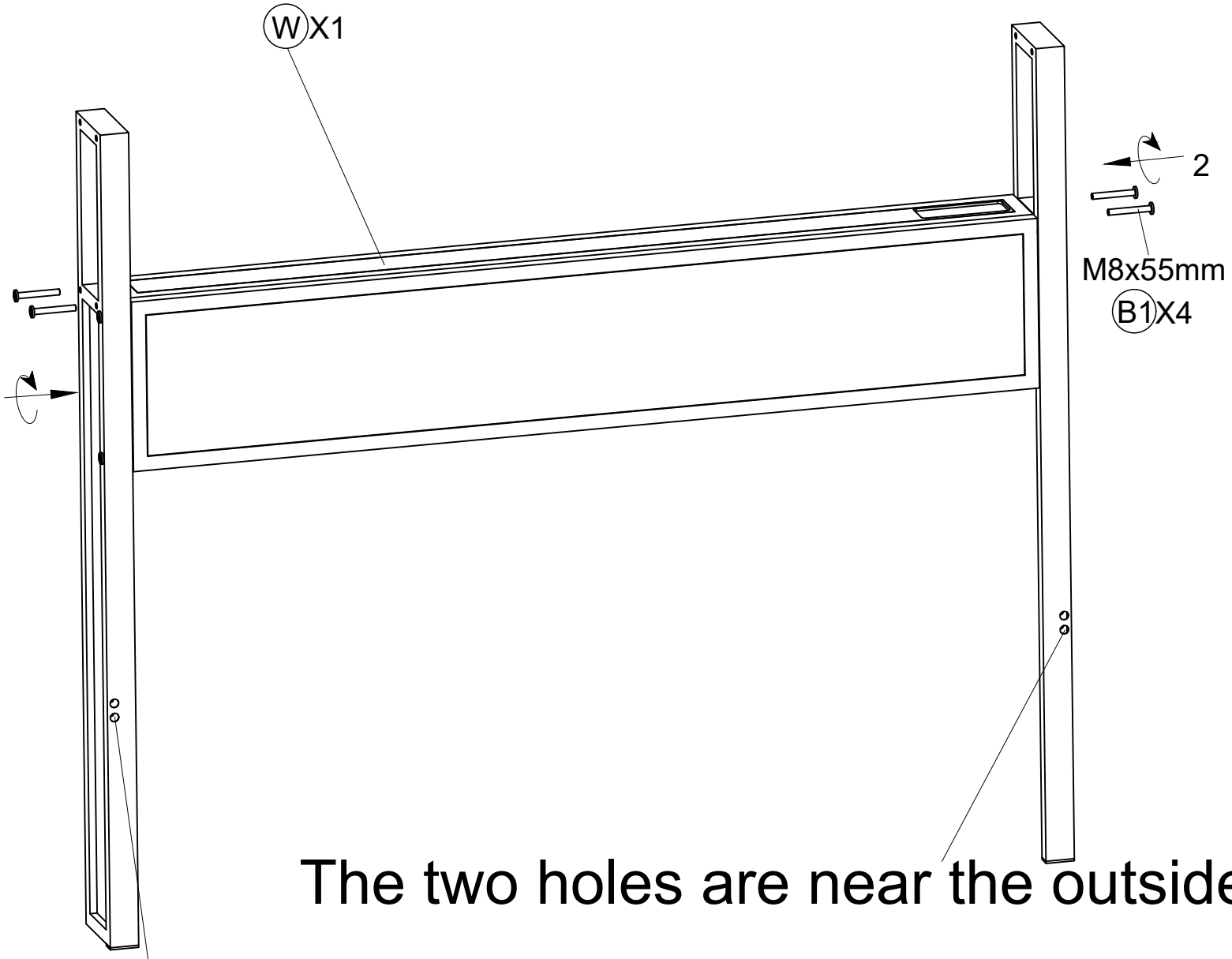
W X1
2
M8x55mm
B1 X4
The two holes are near the outside
The two holes are near the outside

STEP 4

We suggest using drill machine to install "J1" screws

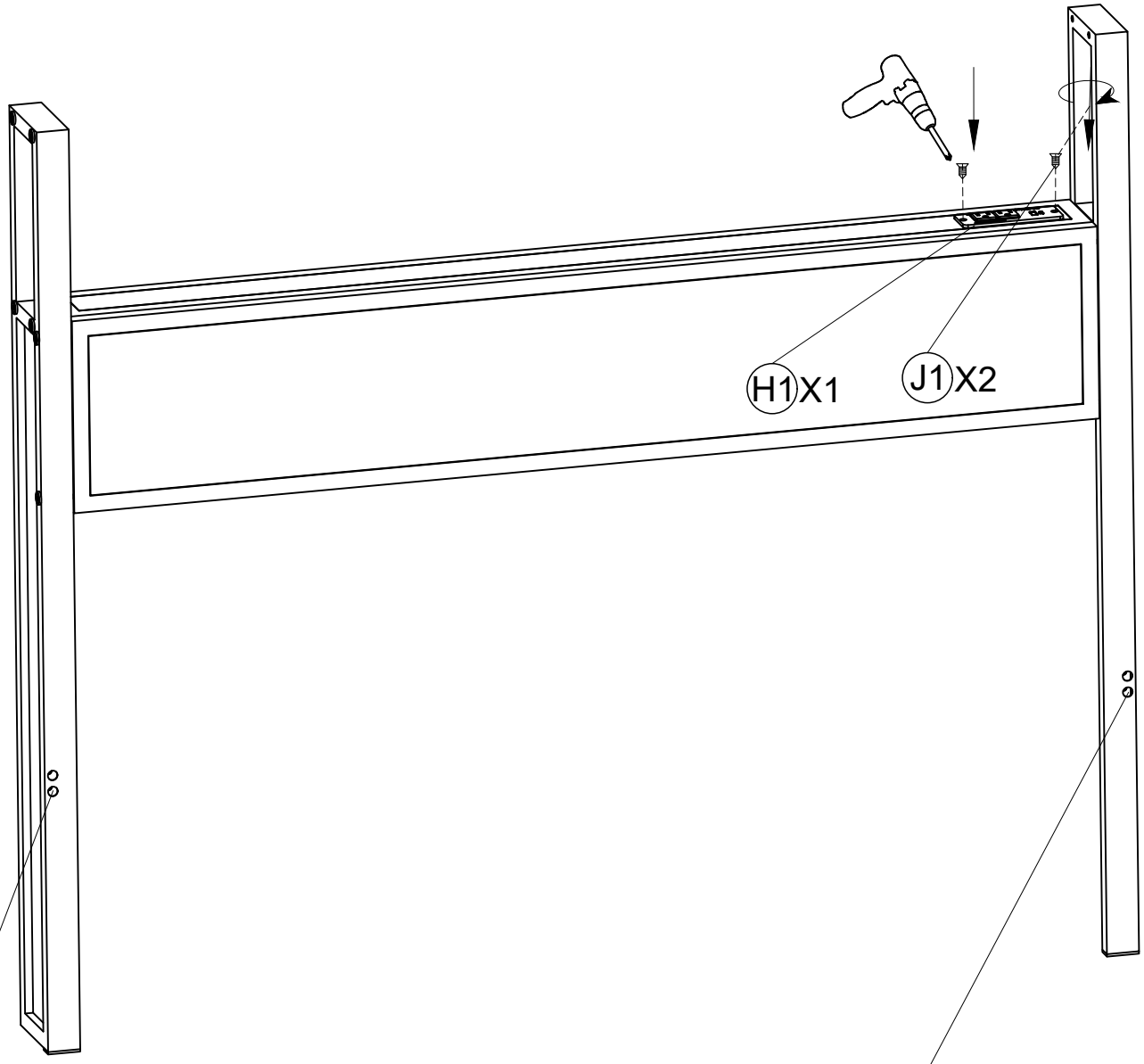

The two holes are near the outside

The two holes are near the outside

STEP 5

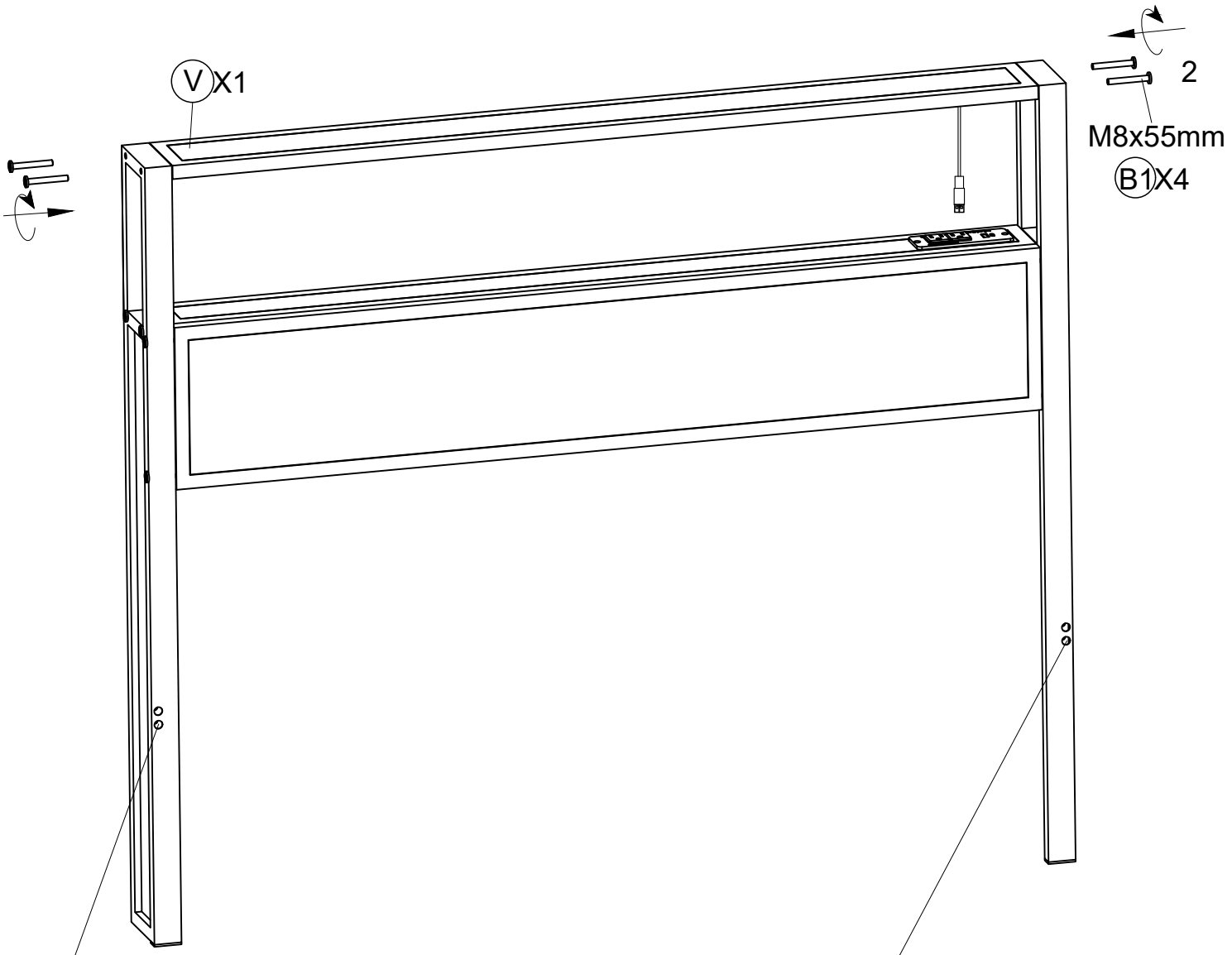

The two holes are near the outside

The two holes are near the outside

STEP 6

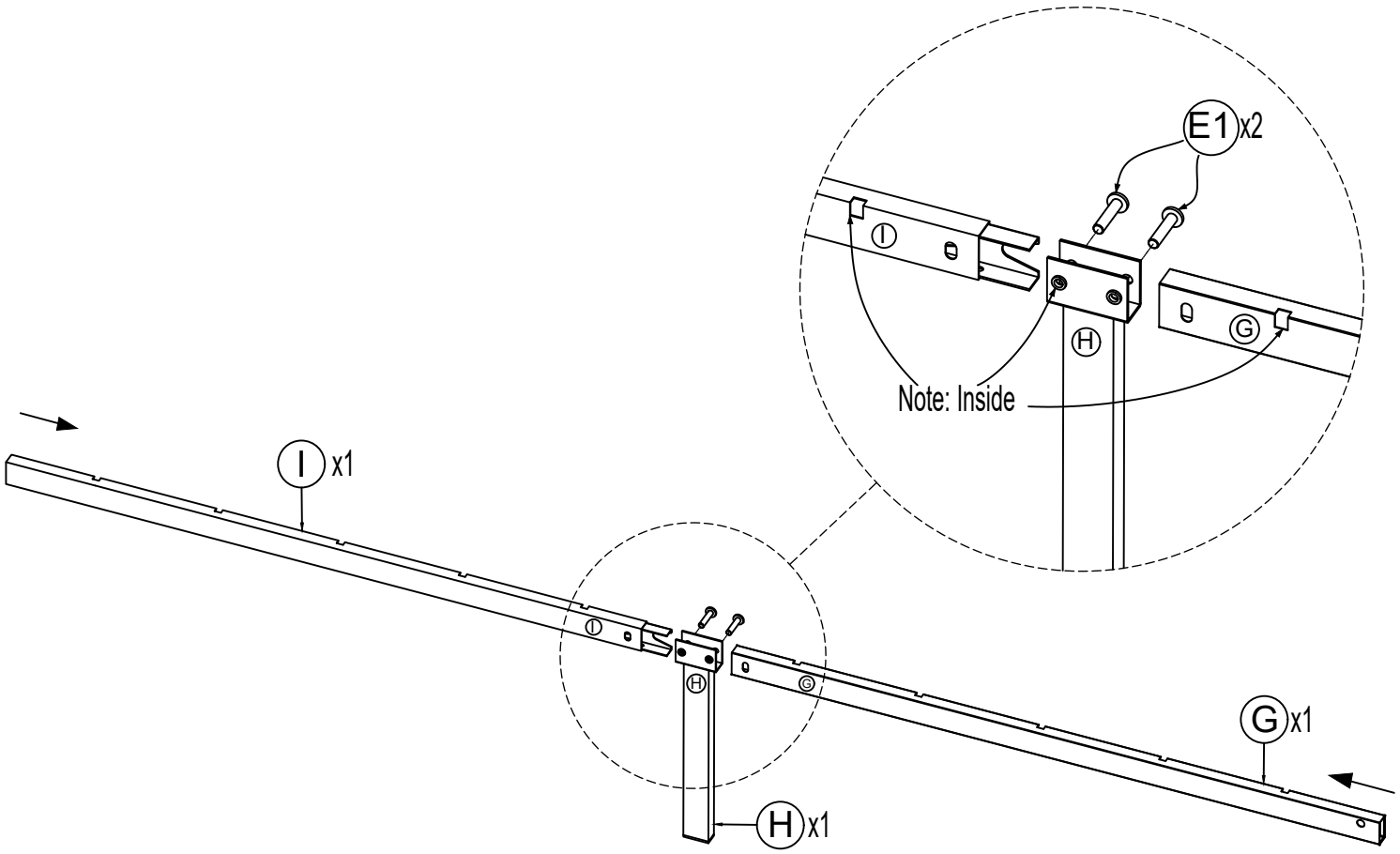
E1 x2
I
G
H
Note: Inside
I x1
G x1
H x1

STEP 7

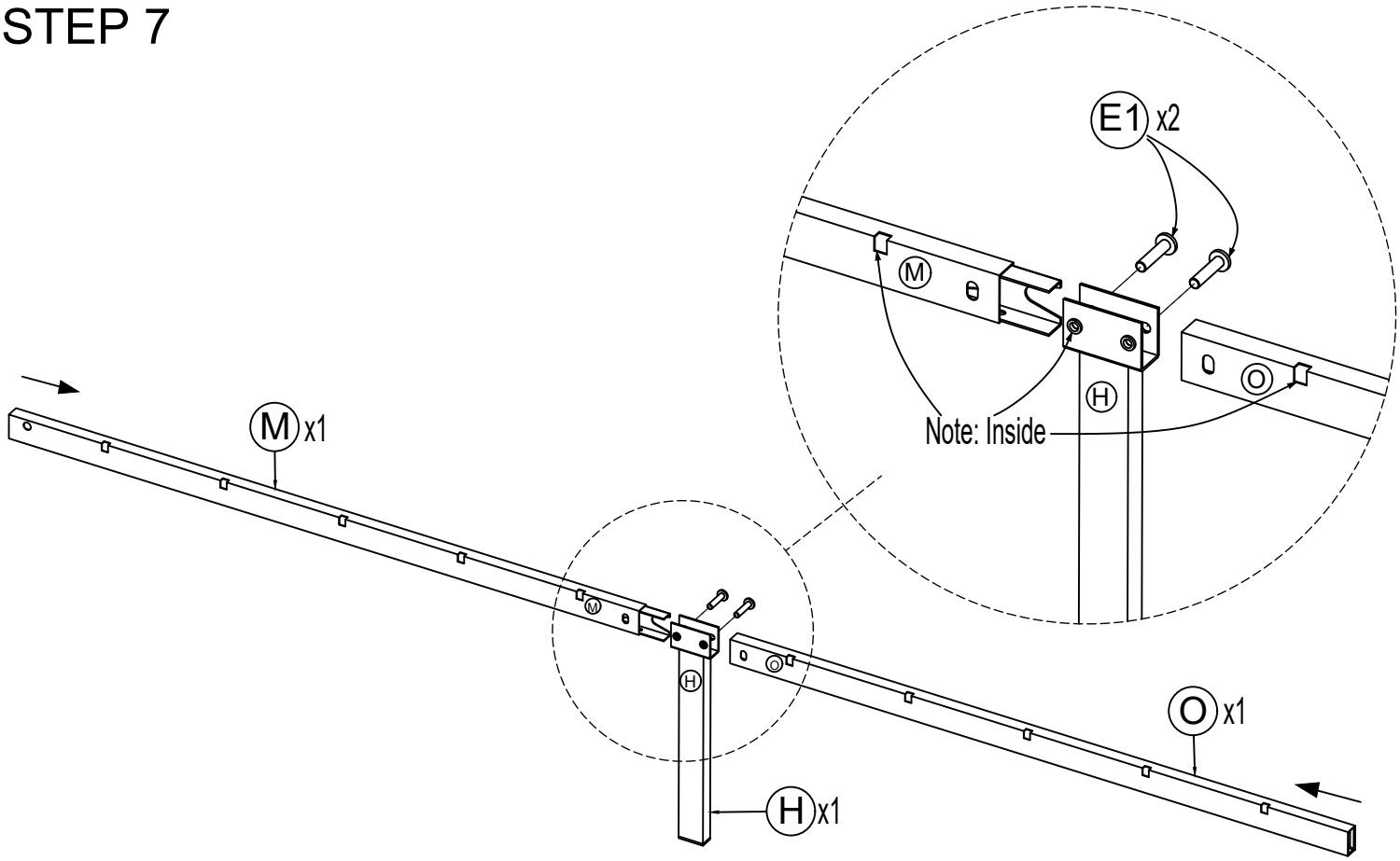
E1 x2
M
O
H
Note: Inside
M x1
O x1
H x1

STEP 8

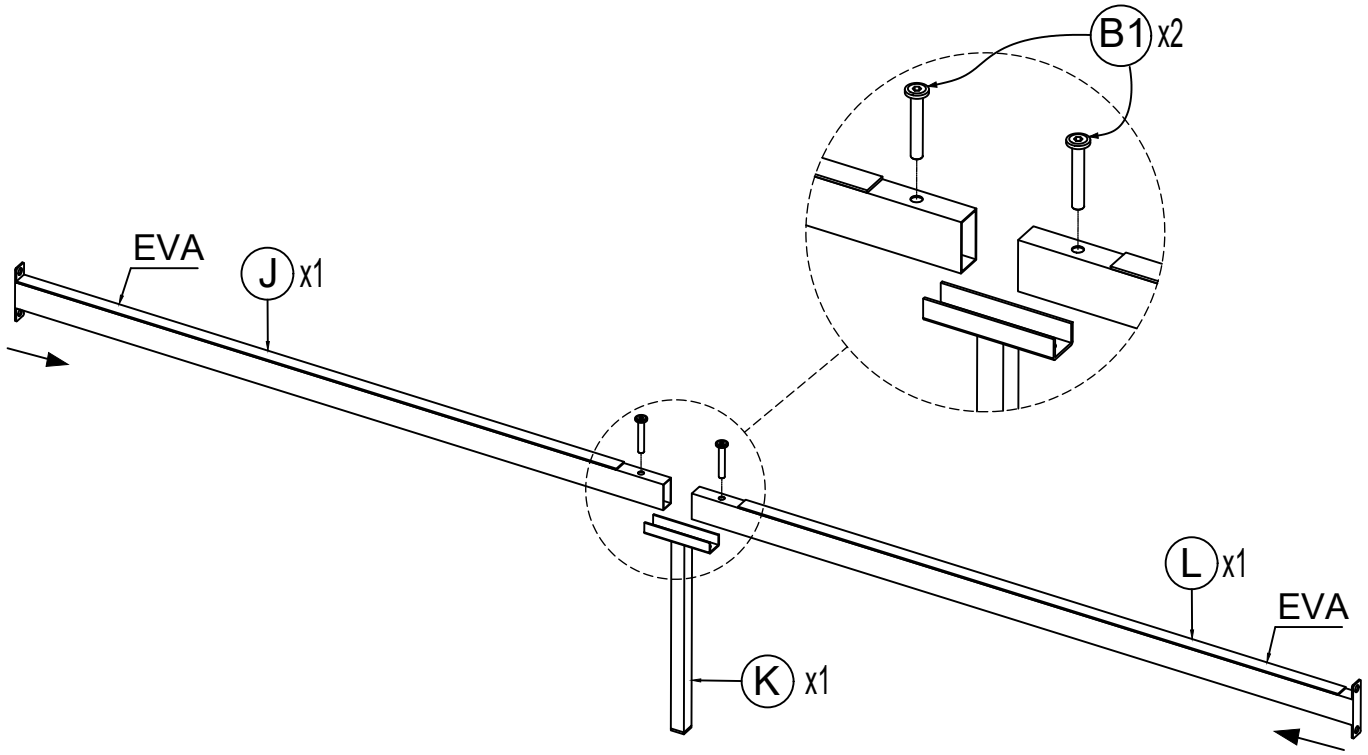

STEP 9

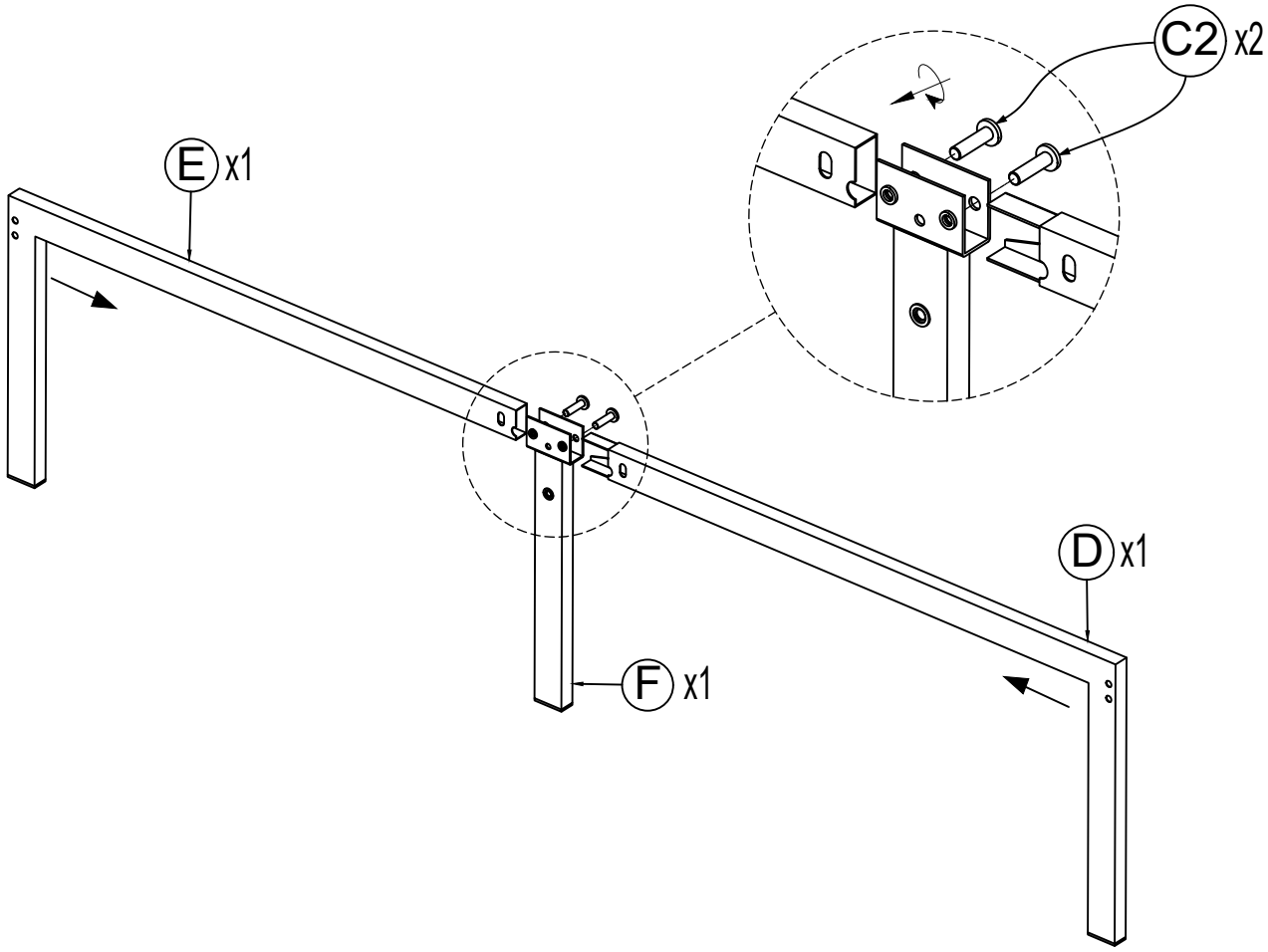

STEP 10

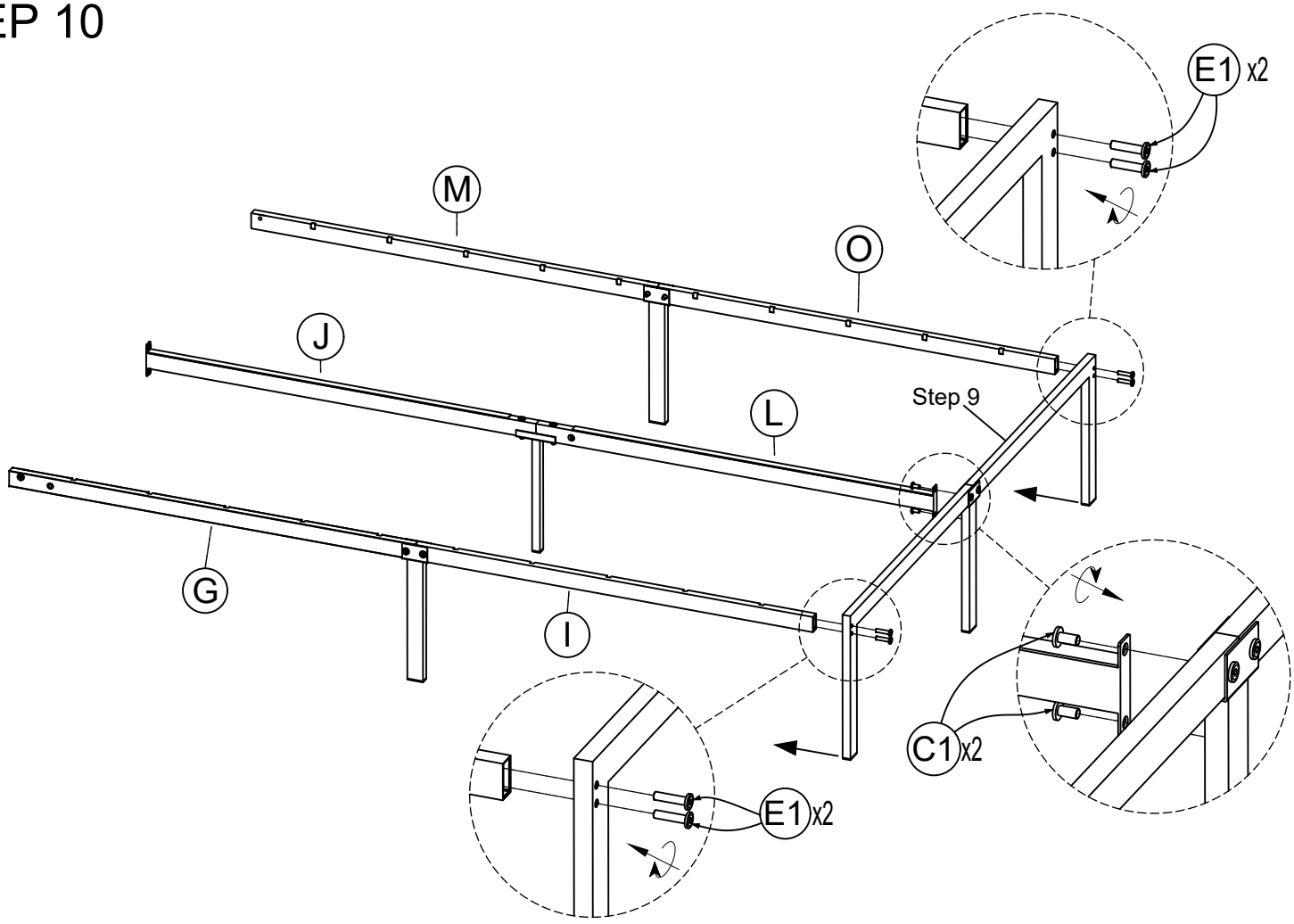

STEP 11

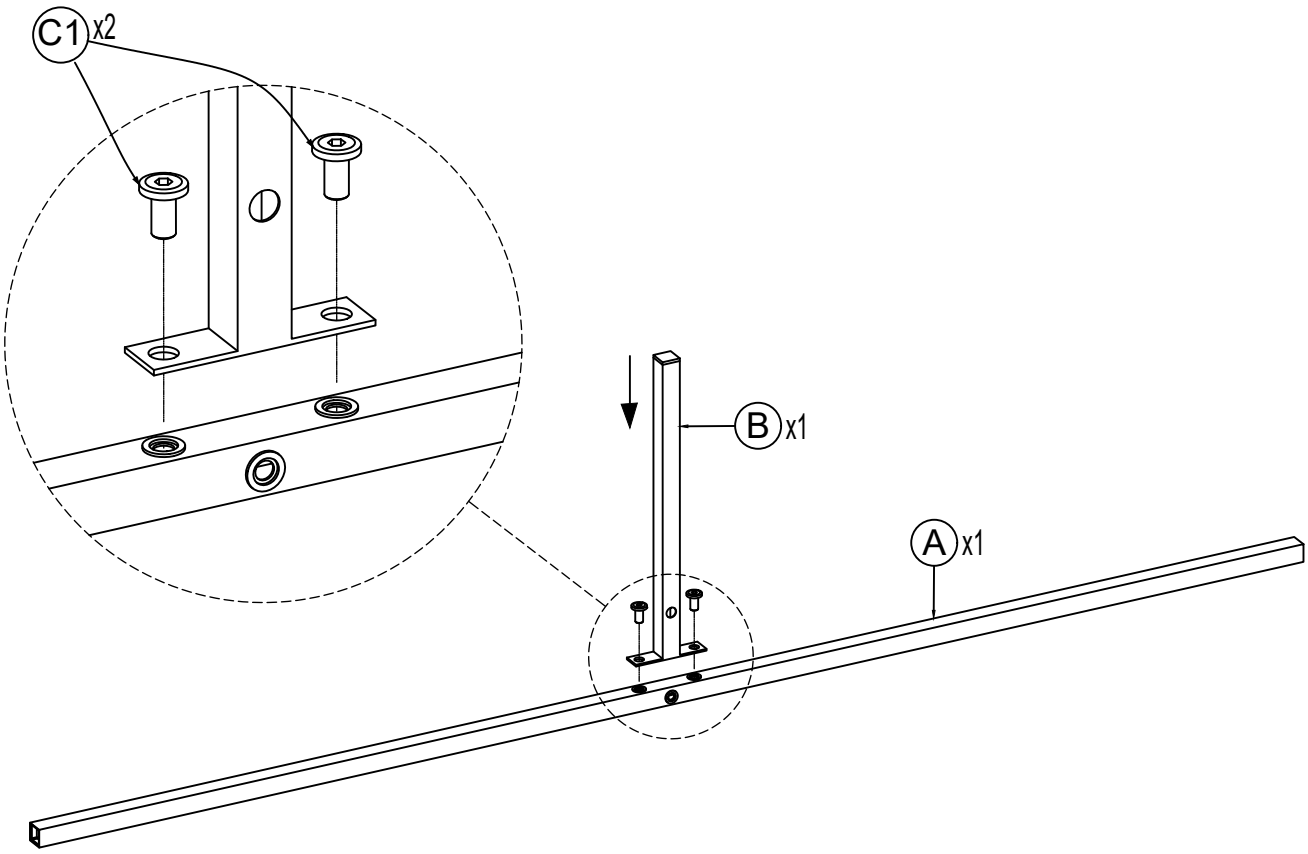

STEP 12

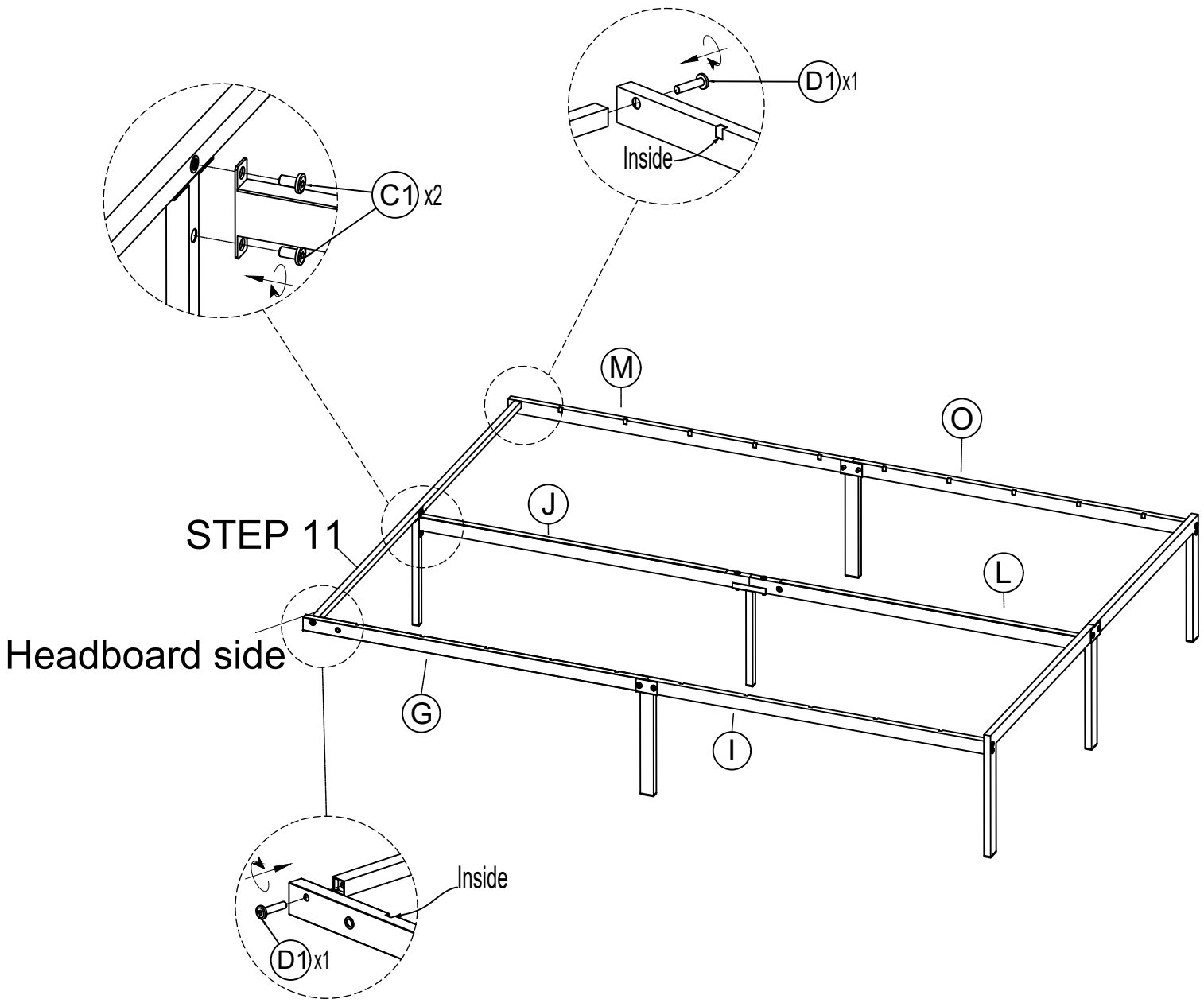

STEP 11

Headboard side

STEP 13

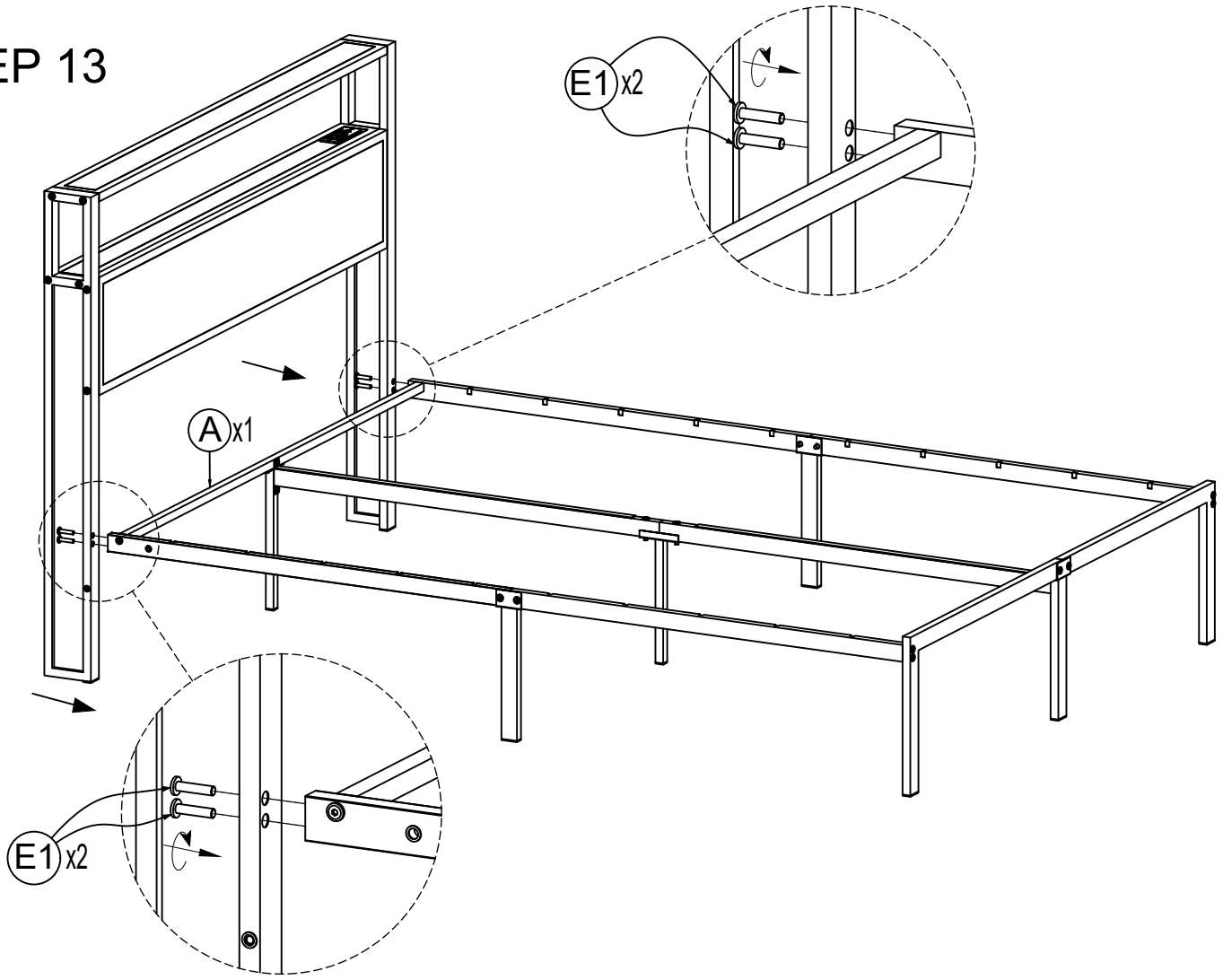

STEP 14

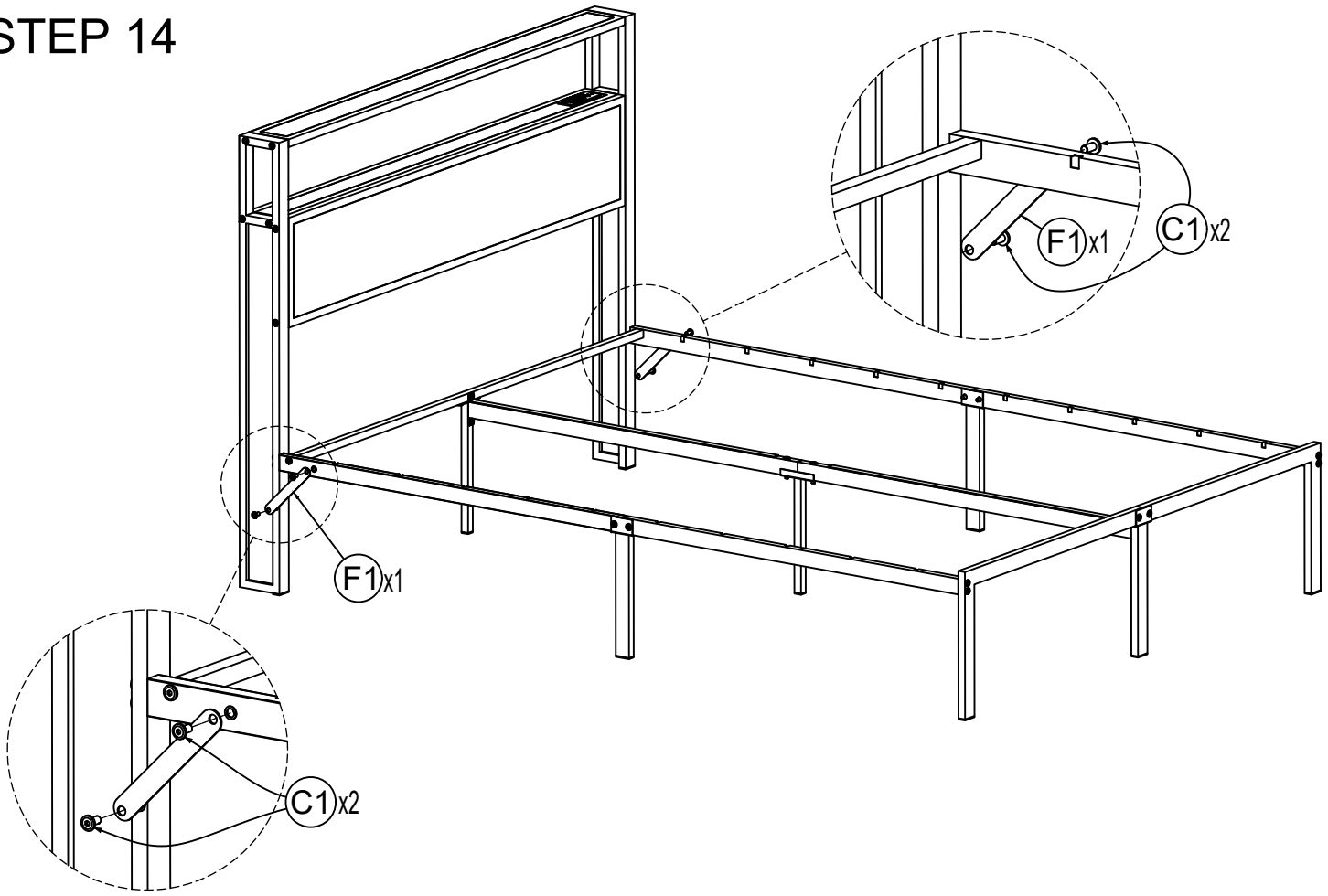

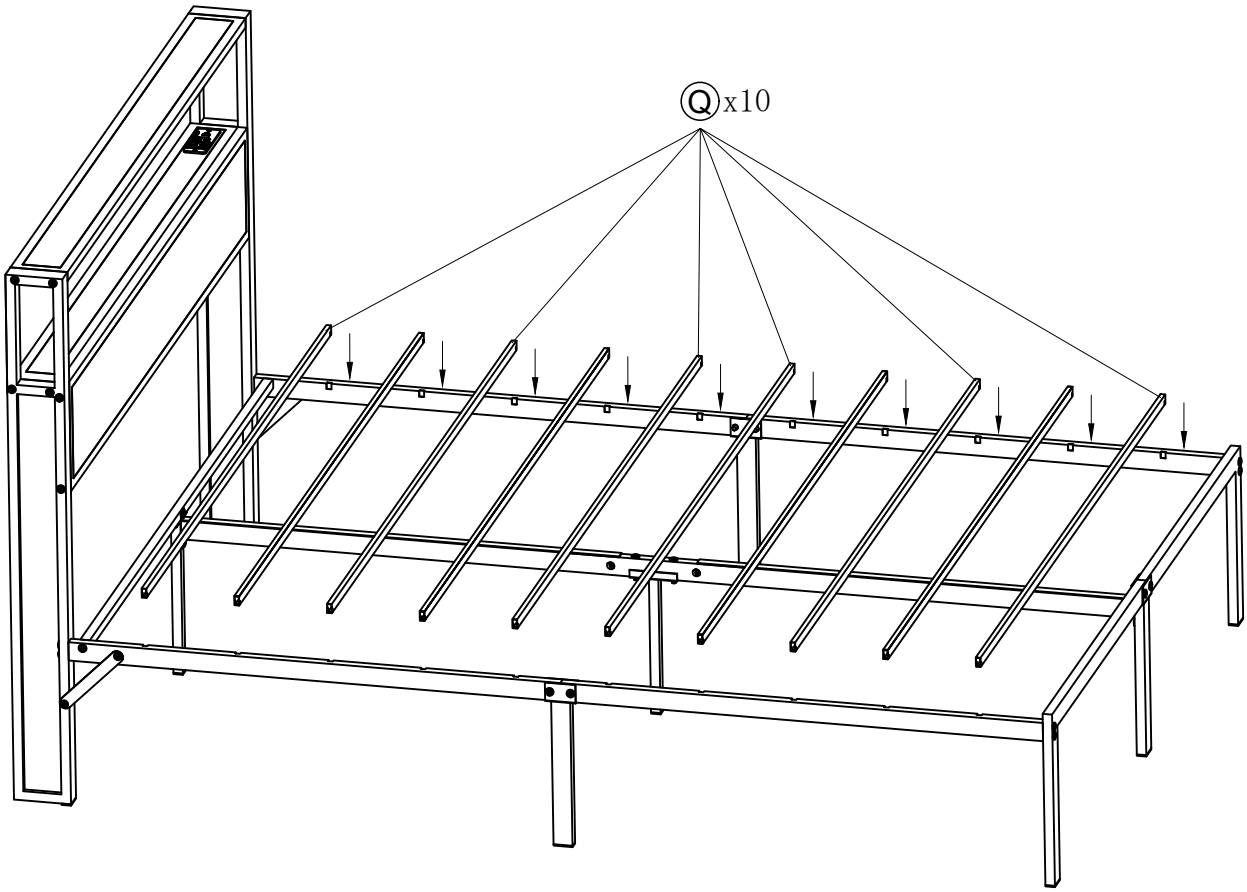
Qx10