ELKAY®
SPECIFICATIONS

Elkay Crosstown 18 Gauge Stainless Steel 31-1/2" x 18-1/2" x 9" Equal Double Bowl Undermount Sink Kit with Filtered Faucet

Model(s) ECTRU31179TFLC

PRODUCT SPECIFICATIONS

Elkay Crosstown® 18 Gauge Stainless Steel 31-1/2" x 18-1/2" x 9", Equal Double Bowl Undermount Sink Kit with Filtered Faucet. Sink is manufactured from 18 gauge 304 Stainless Steel with a Stainless Steel finish, Rear Center drain placement, and Full spray sides and bottom with Sides and Bottom pads.

Installation Type:	Sink Kits, Undermount
Material:	304 Stainless Steel
Finish:	Stainless Steel
Gauge:	18
Sound Deadening:	Full spray sides and bottom with Sides and Bottom pads
Number of Bowls:	2
Sink Dimensions:	31-1/2" x 18-1/2" x 9"
Bowl 1 Dimensions:	14-1/2" x 17" x 9"
Bowl 2 Dimensions:	14-1/2" x 17" x 9"
Drain Size:	3-1/2" (89mm)
Drain Location:	Rear Center
Minimum Cabinet Size:	36"
Mounting Hardware:	Included
Template Included:	Yes
Cutout Template #:	1000001381

Template is available for download at elkay.com. CAD software will be required to open the template.

Included with Product: **Faucet LKAV7051FCR, 2x Drain LKDD and 2x Bottom Grid CTXBG1316, Filter ERF750**

AMERICAN PRIDE. A LIFETIME TRADITION.
Like your family, the Elkay family has values and traditions that endure. For almost a century, Elkay has been a family-owned and operated company, providing thousands of jobs that support our families and communities.

Product Compliance: ASME A112.19.3/CSA B45.4
Faucet: ASME A112.18.1/CSA B125.1
NSF 61
NSF 372 (lead free)
Accessory: ASME A112.18.2/CSA B125.2
NSF 42
NSF 53

Installation Profile:

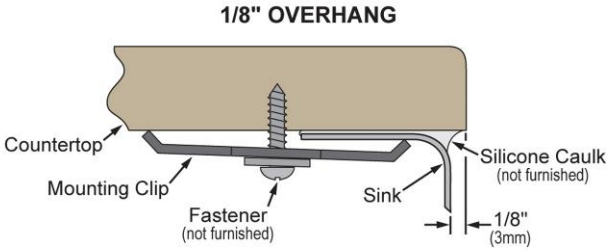

Designed to affix to the underside of any solid surface countertop.

Clean and Care Manual (PDF)
Installation Instructions (PDF) - 1000005239
Installation Instructions (PDF) - 1000005235_drain
Warranty (PDF)

PART:_____QTY: _____
PROJECT:_____
CONTACT:_____
DATE:_____
NOTES:_____
APPROVAL:_____

In keeping with our policy of continuing product improvement, Elkay reserves the right to change product specifications without notice. Please visit elkay.com for the most current version of Elkay product specification sheets. This specification describes an Elkay product with design, quality, and functional benefits to the user. When making a comparison of other producers' offerings, be certain these features are not overlooked.

Included Accessories		
1000004370	Spec Sheet (PDF)	
LKAV7051FCR	Elkay Avado Single Hole 2-in-1 Kitchen Faucet with Filtered Drinking Water, Chrome Spec Sheet (PDF)	
CTXBG1316	Spec Sheet (PDF)	
LKDD	Spec Sheet (PDF)	

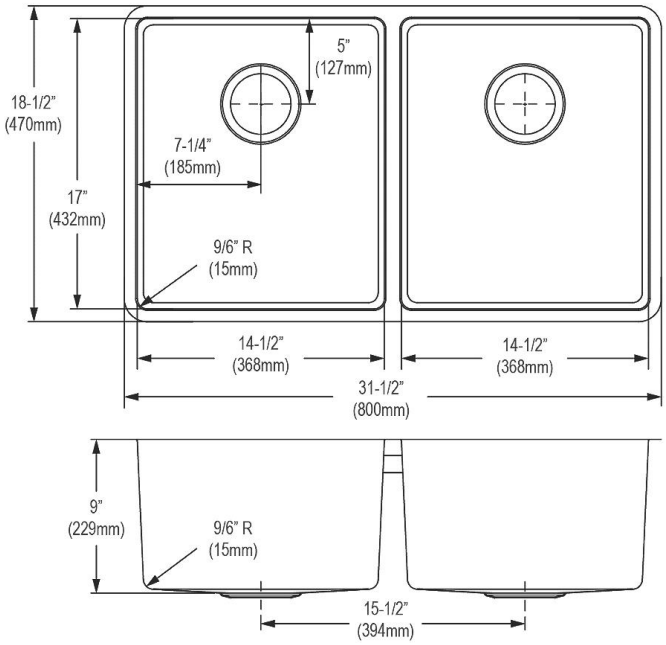

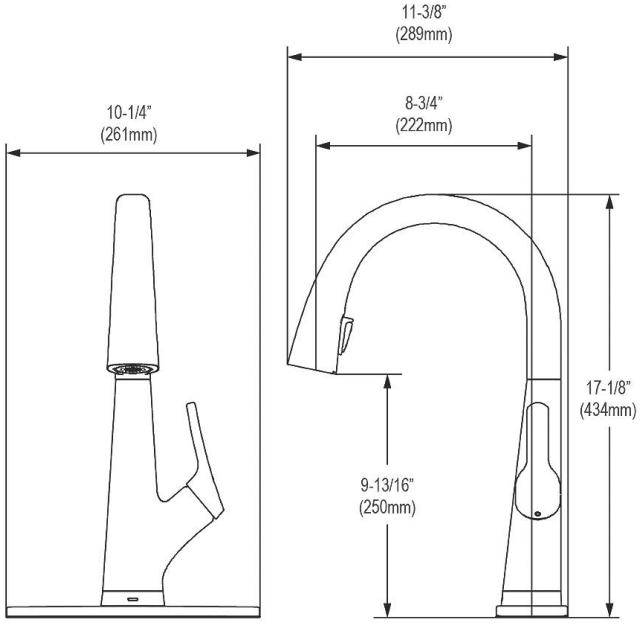

Optional Accessories		
LK35	Elkay 3-1/2" Drain Fitting Type 304 Stainless Steel Body Strainer Basket and Tailpiece Spec Sheet (PDF)	

In keeping with our policy of continuing product improvement, Elkay reserves the right to change product specifications without notice. Please visit elkay.com for the most current version of Elkay product specification sheets. This specification describes an Elkay product with design, quality, and functional benefits to the user. When making a comparison of other producers' offerings, be certain these features are not overlooked.

© 2022