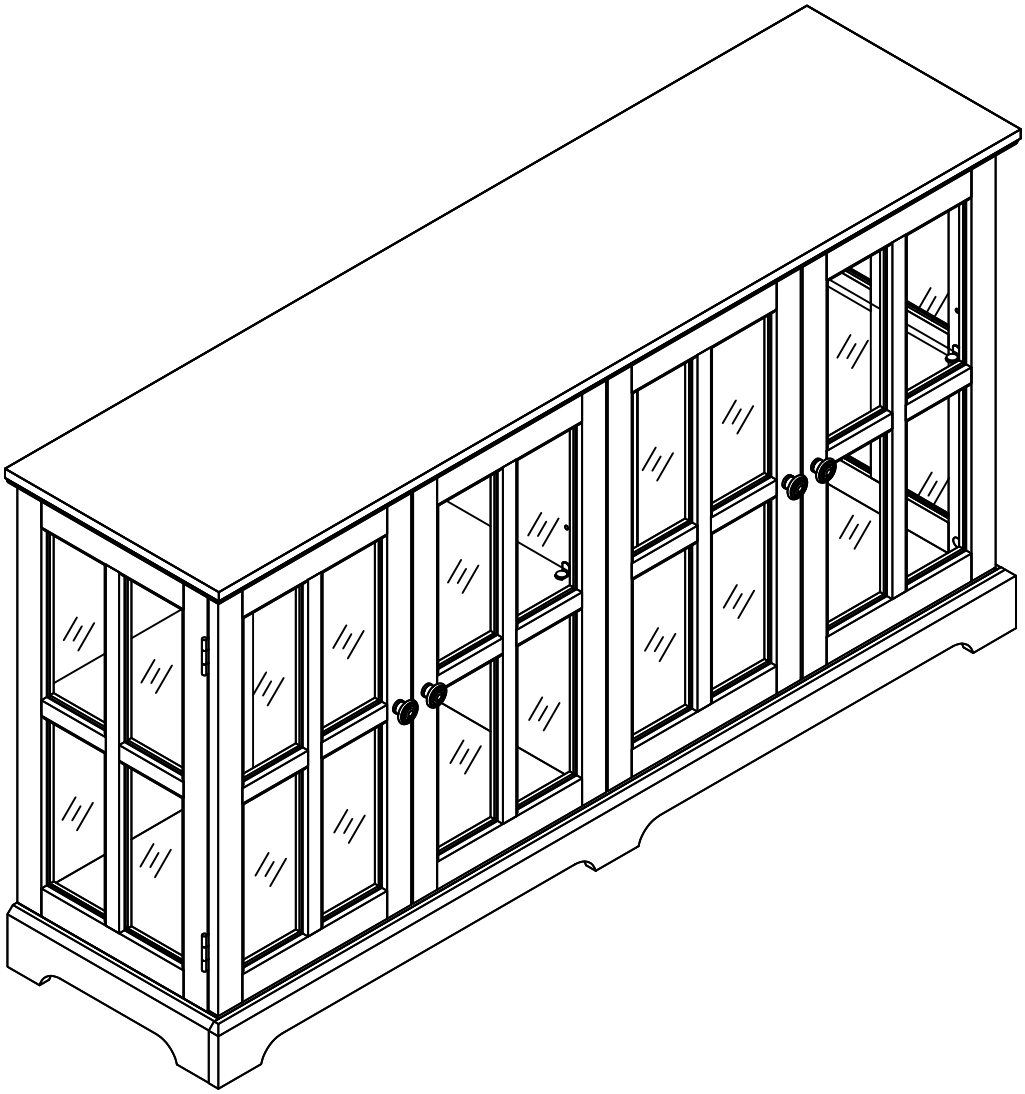

FOUR DOORS GLASS CABINET

Assembly Instruction

NOTE: This instruction manual contains IMPORTANT safety information. Please read carefully before assembling the product

List of Parts

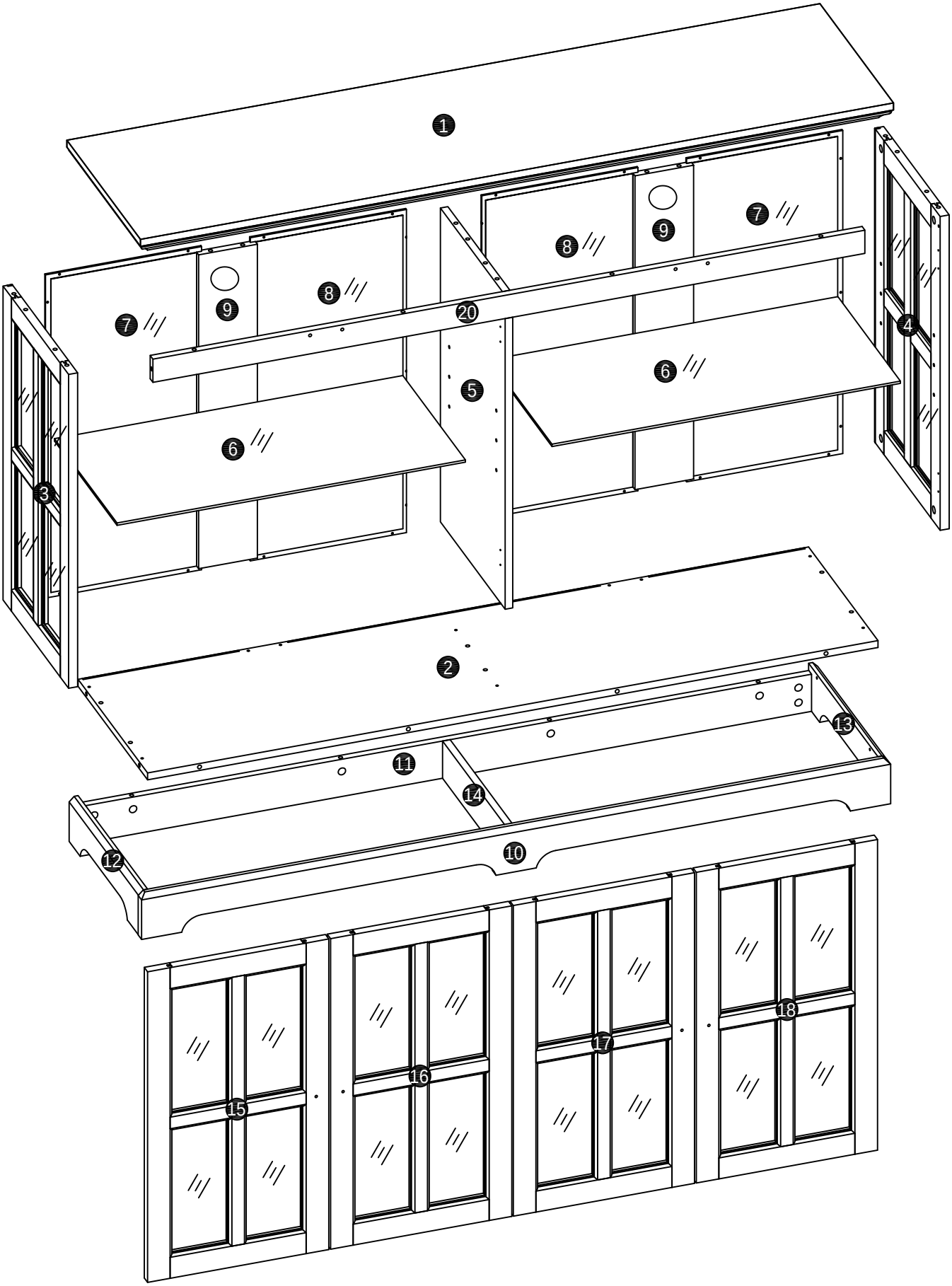

Hardware

A x 51+2	B x 35+2	C x 12+1	D x 8+1	E x 4
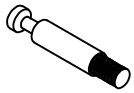 Ø6 x 34mm	Ø15 x 10mm	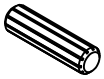 Ø8*30mm	Ø3*12mm	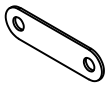

F x 4	G x 4	H x 12+2	I x 56+2	J x 2
	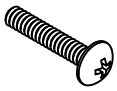 Ø4*22mm	Ø20mm	Ø3.5*14mm	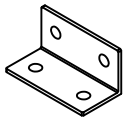

K x 8	L x 37+2	M x 4	N x 2	O x 4
	Ø3.5*12mm	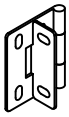	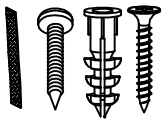	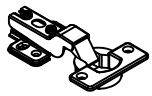

P X 1	Q X 1	R X 1
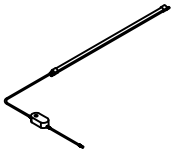	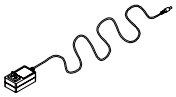	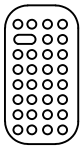

STEP1

A x 21
Ø6 x 34mm

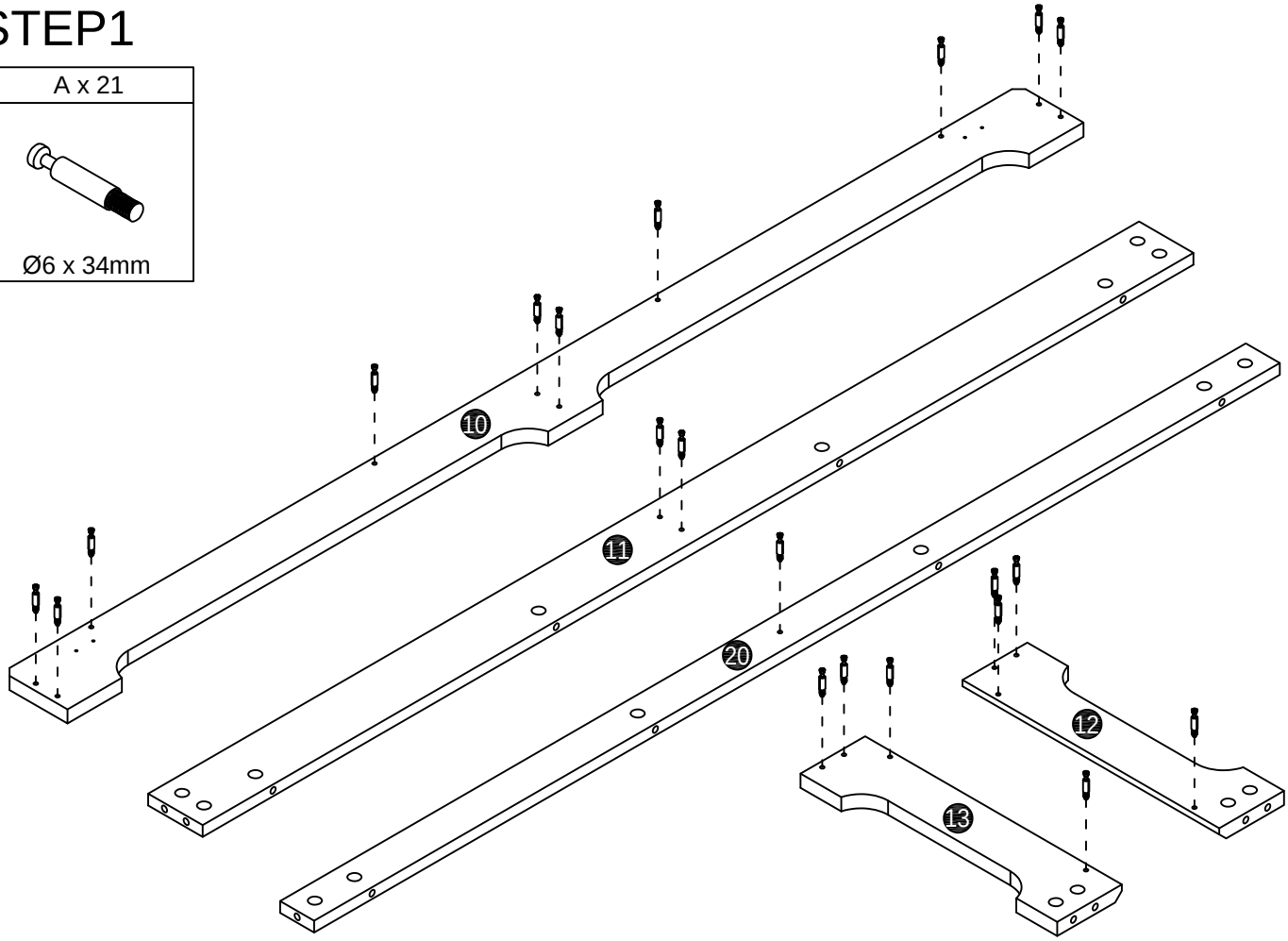

STEP2

A x 14
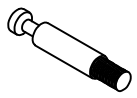
Ø6 x 34mm

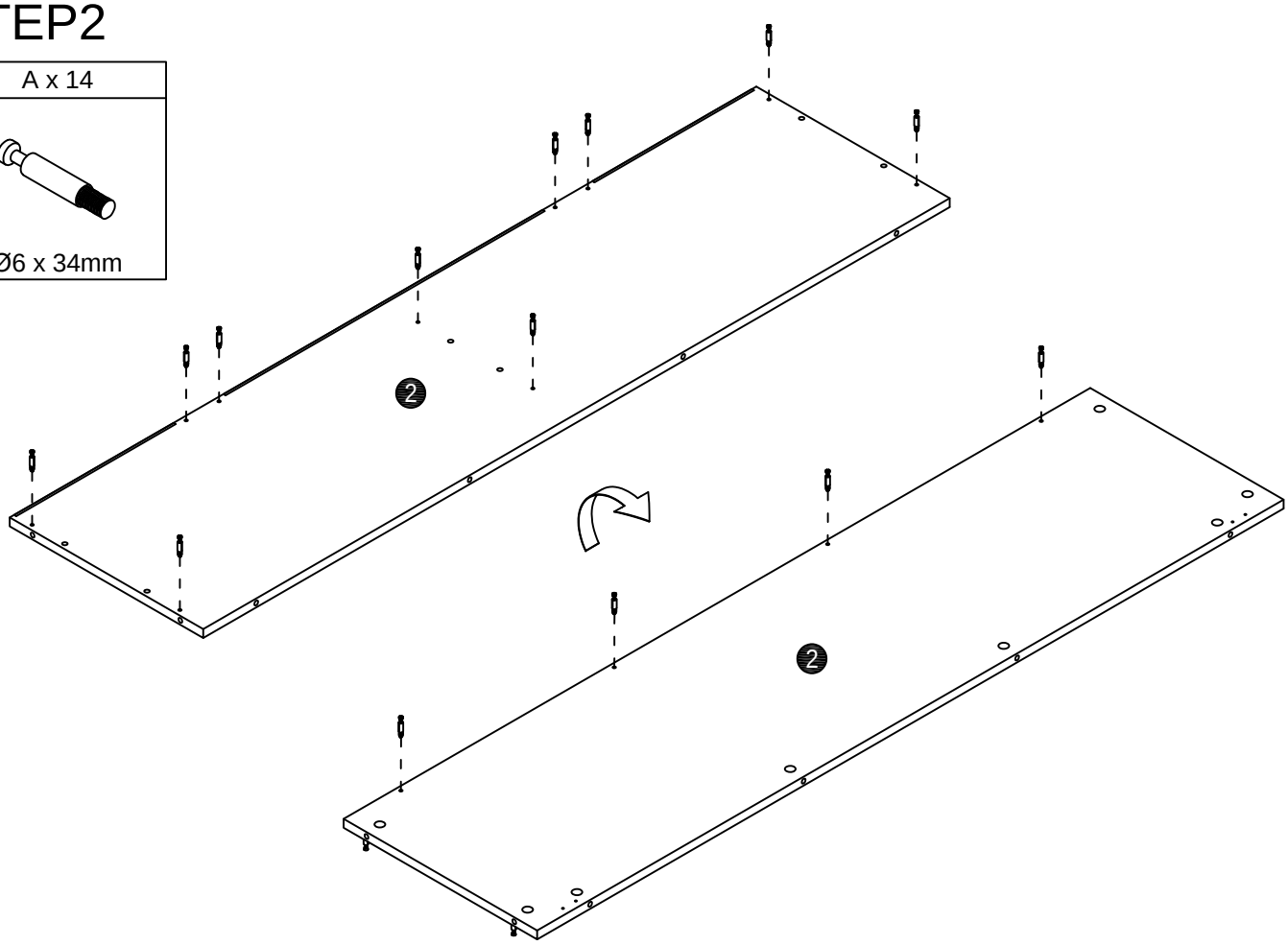

STEP3

B x 6

Ø15 x 10mm

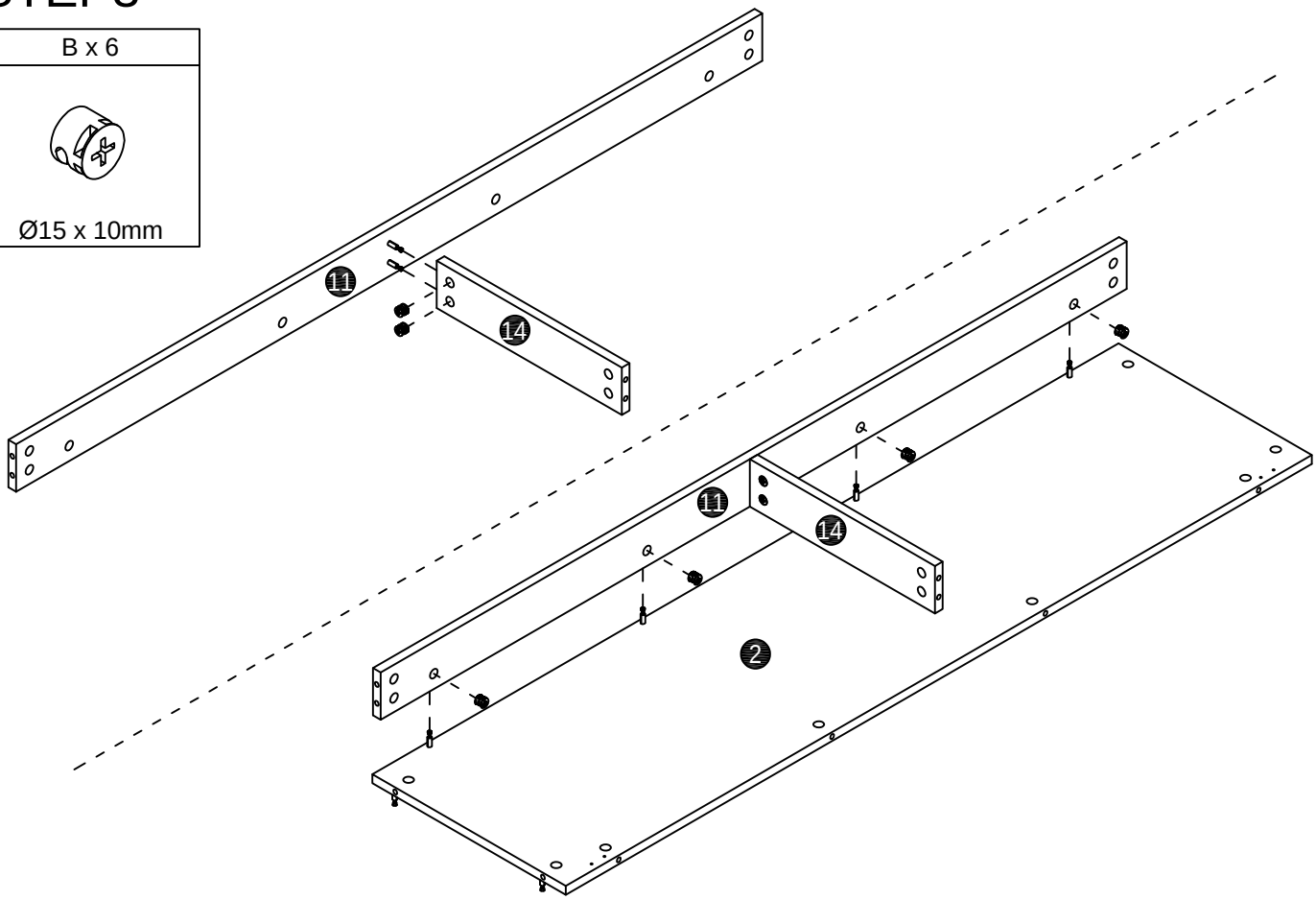

STEP4

B x 8

Ø15 x 10mm

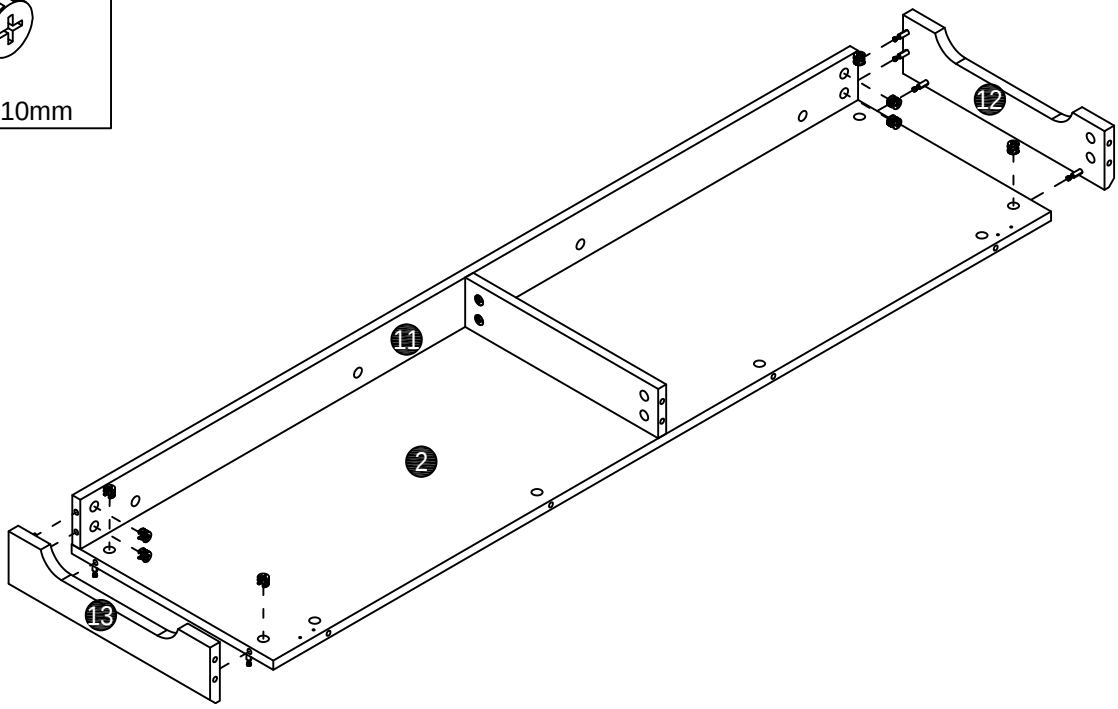

STEP5

B x 10
Ø15 x 10mm

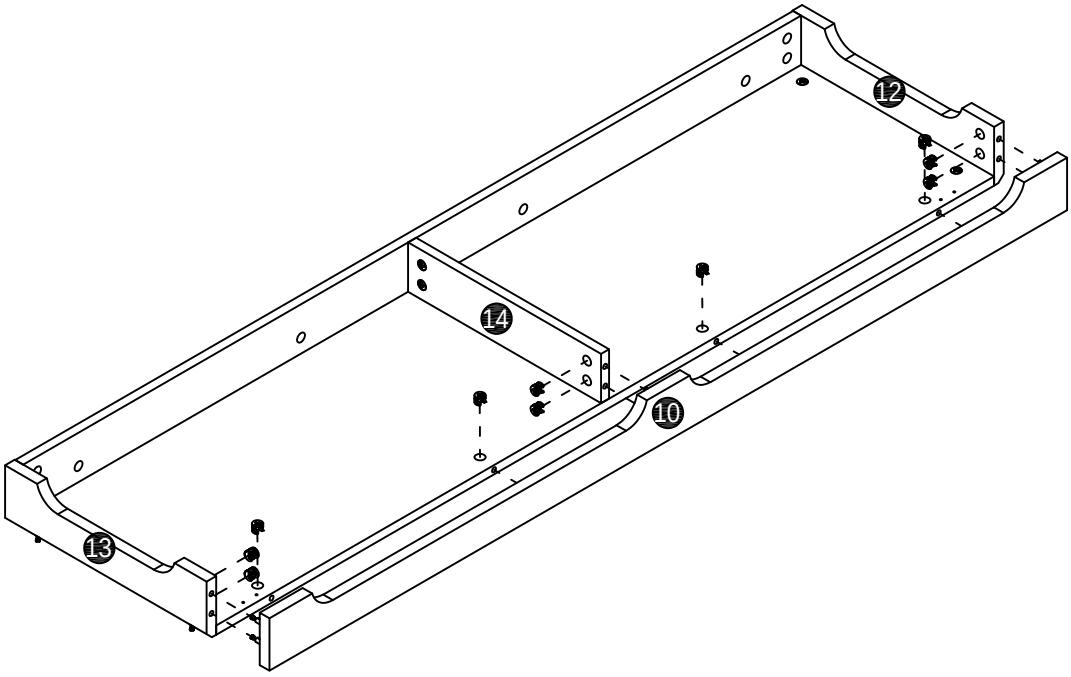

STEP6

I x 8
Ø3.5*14mm
J x 2
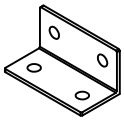

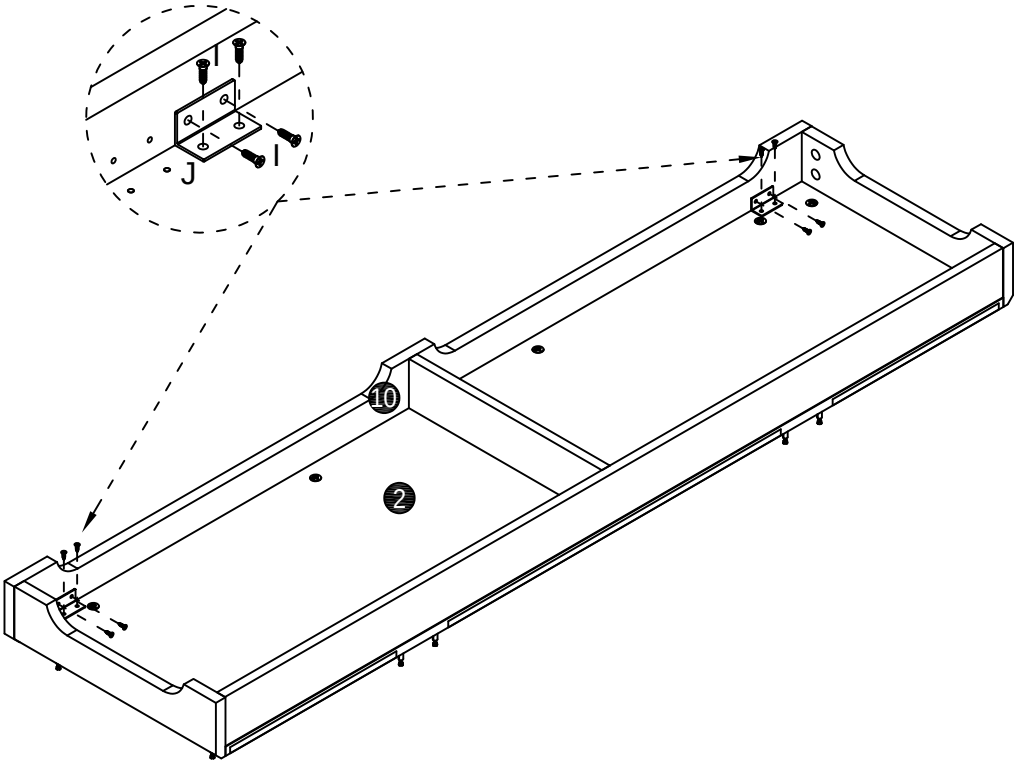

STEP7

A x 2
Ø6 x 34mm

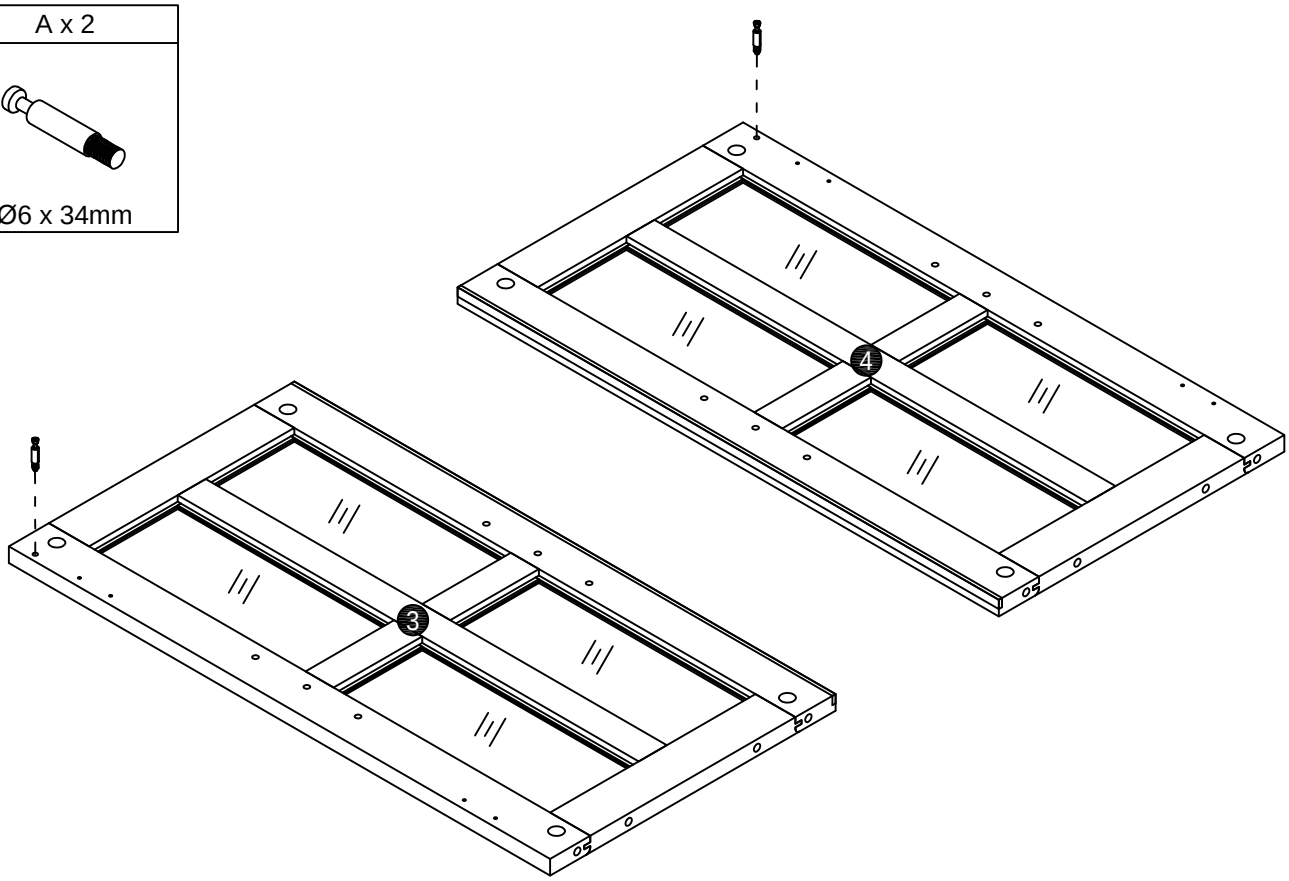

STEP8

B x 3
Ø15 x 10mm

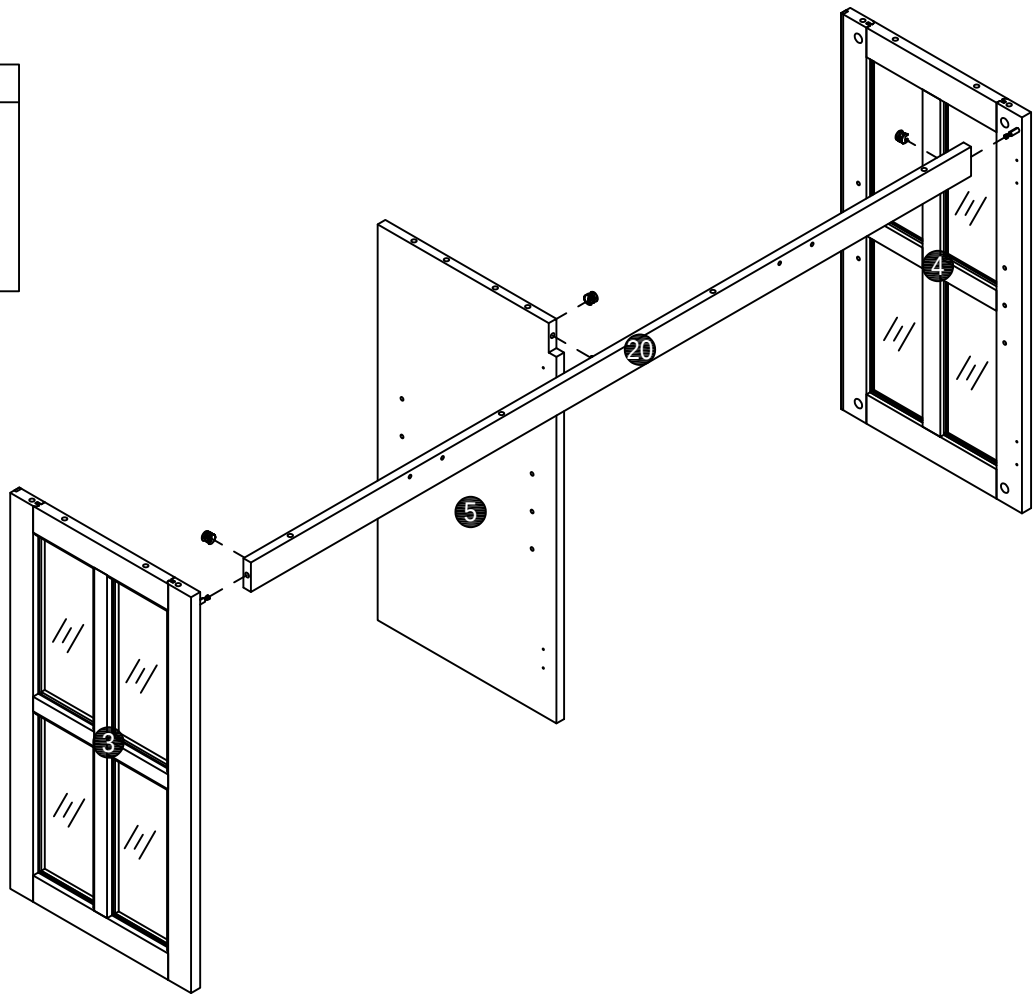

STEP9

B x 10
Ø15 x 10mm
C x 6
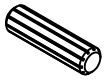 Ø8*30mm

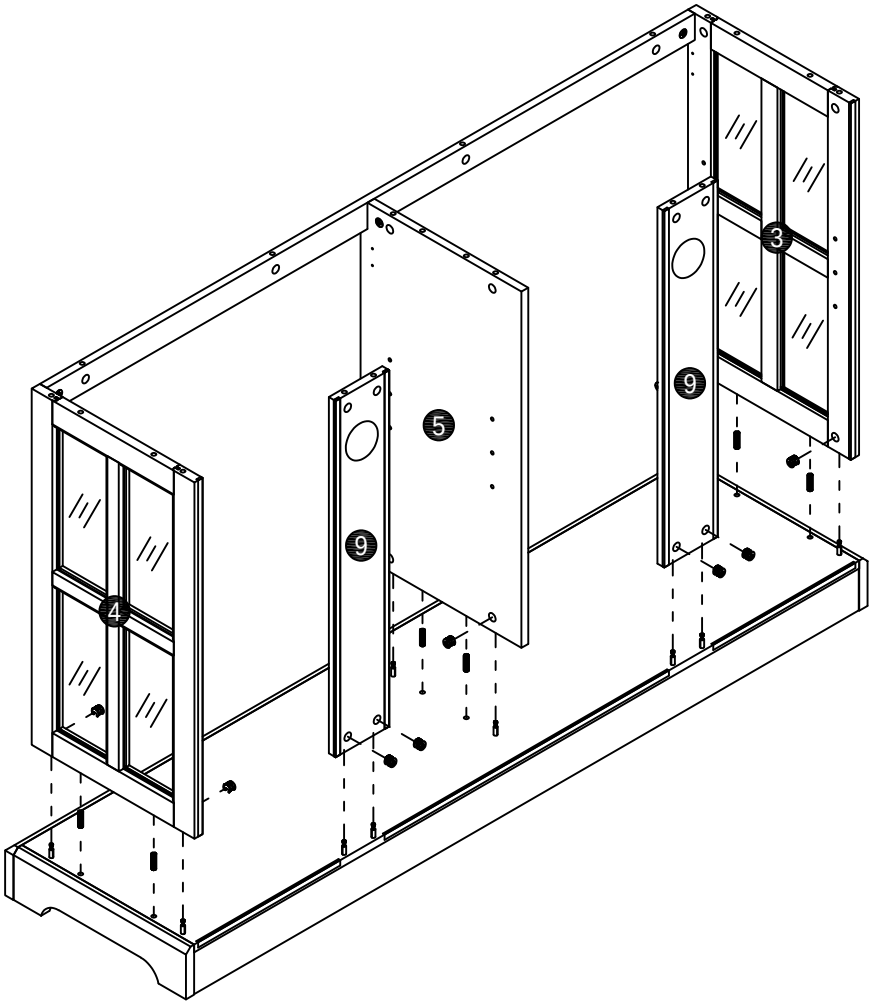

STEP10

A x 14
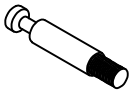 Ø6 x 34mm

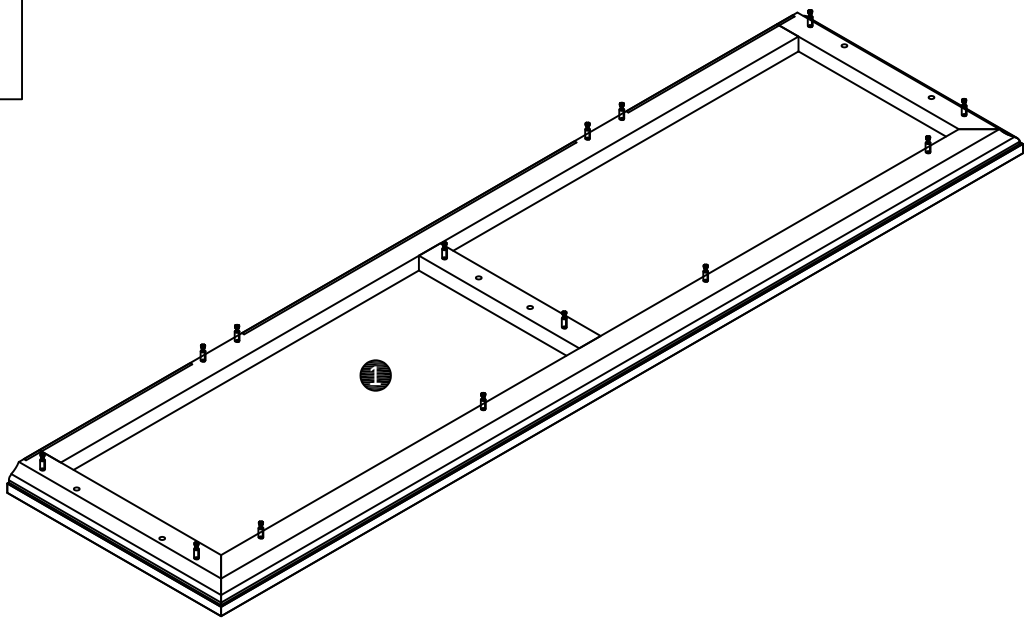

STEP11

I x 2
Ø3.5*14mm

P X 1
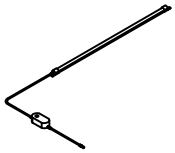

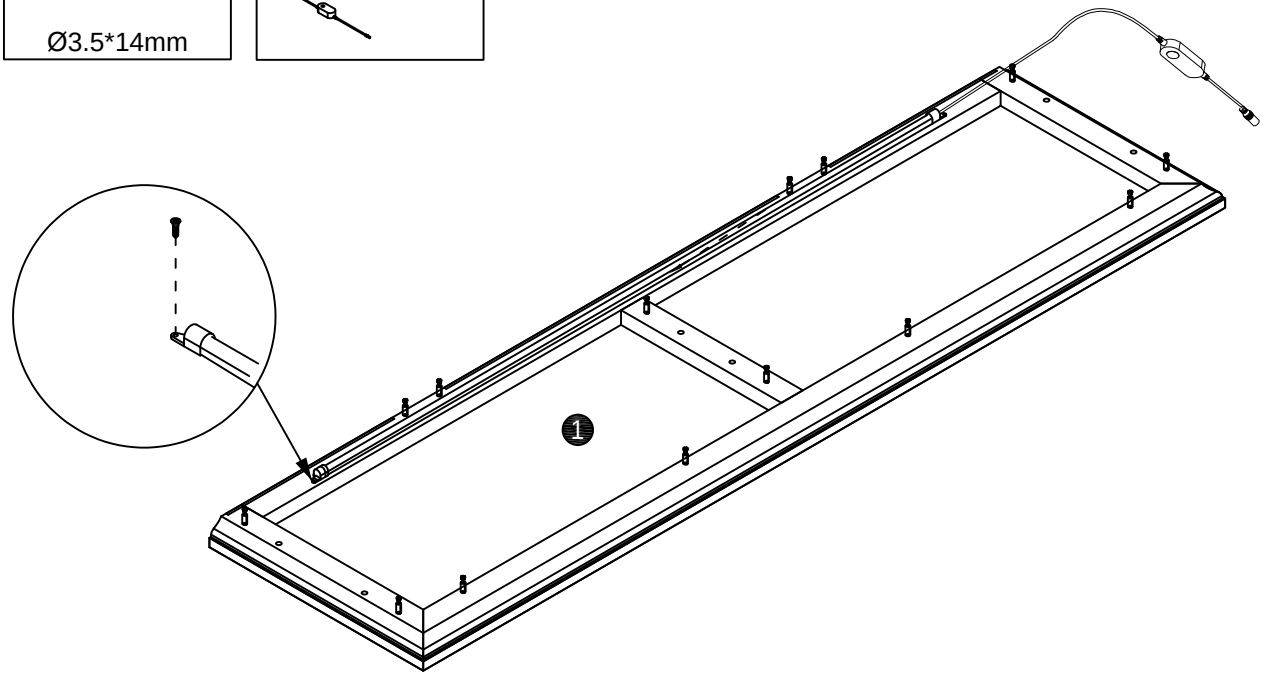

STEP12

B x 14
Ø15 x 10mm
C x 6
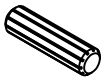 Ø8*30mm

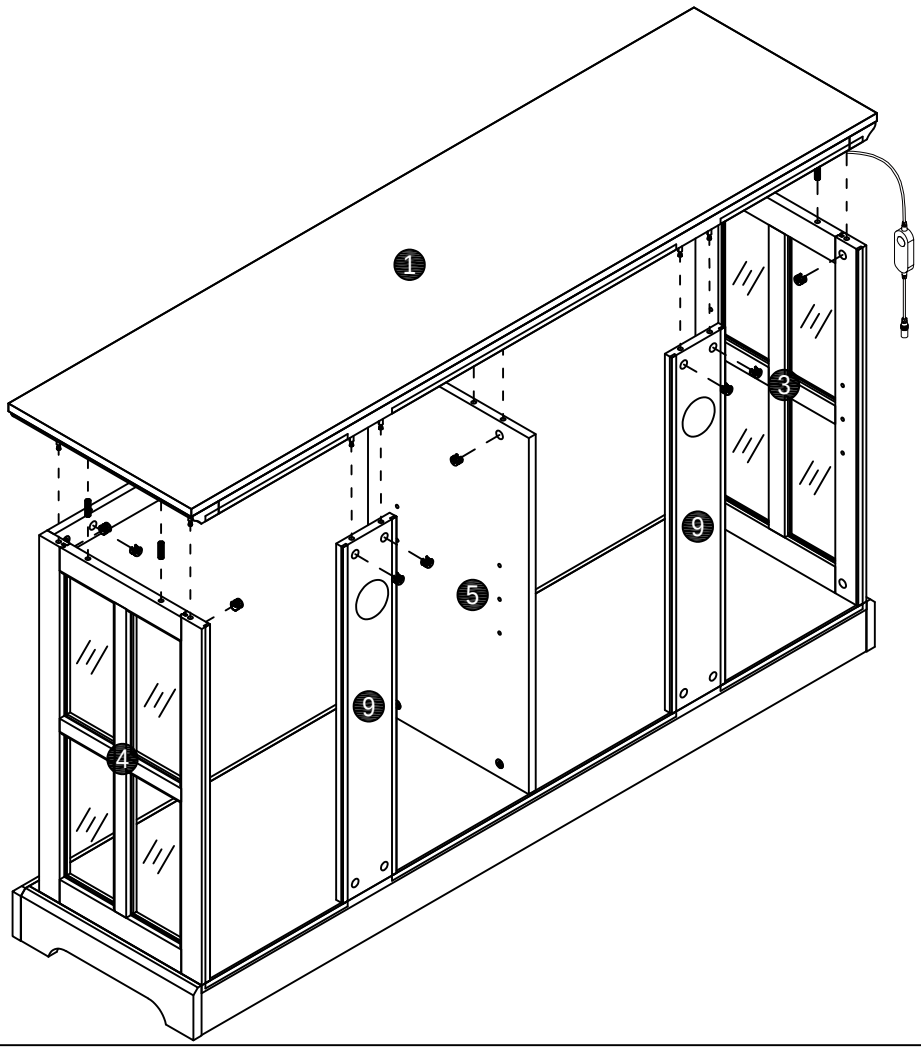

STEP13

L x 37
Ø3.5*12mm

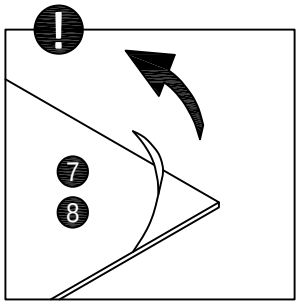

Remove protective film on the mirror panel.

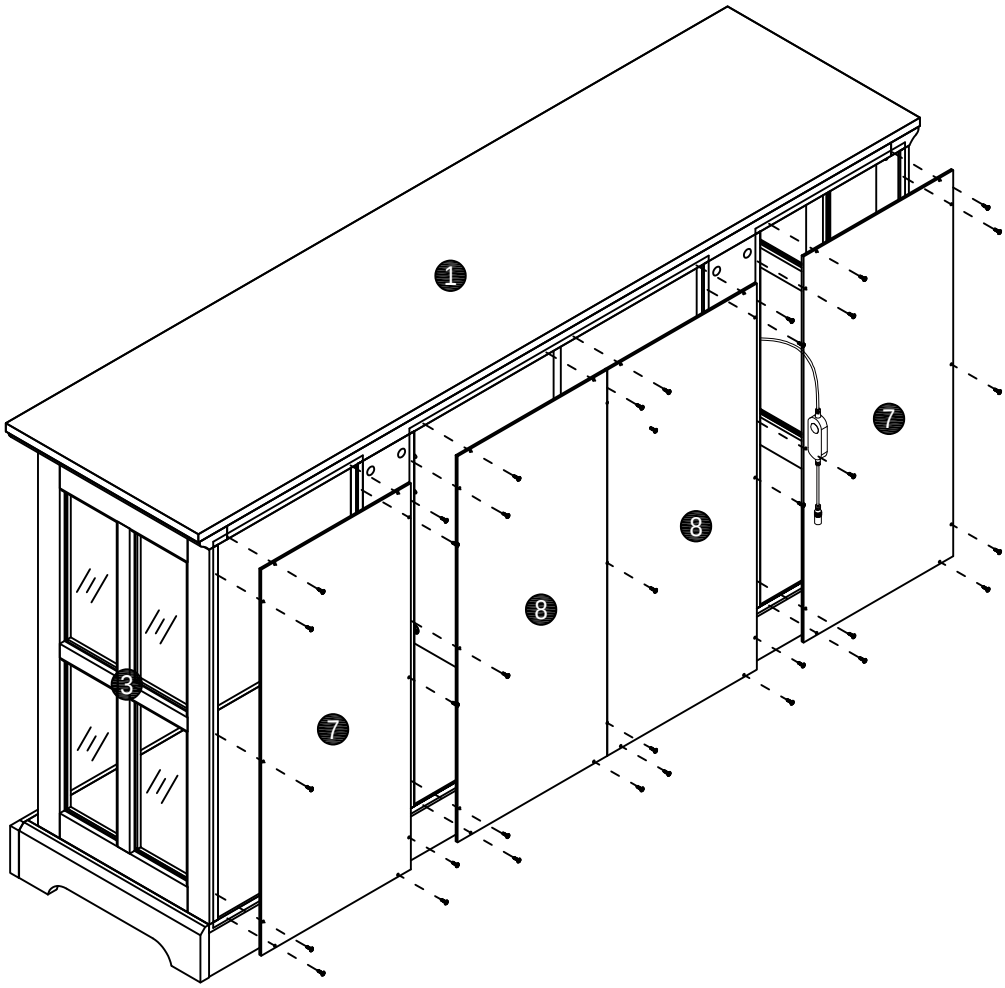

STEP14

H x 12
Ø20mm

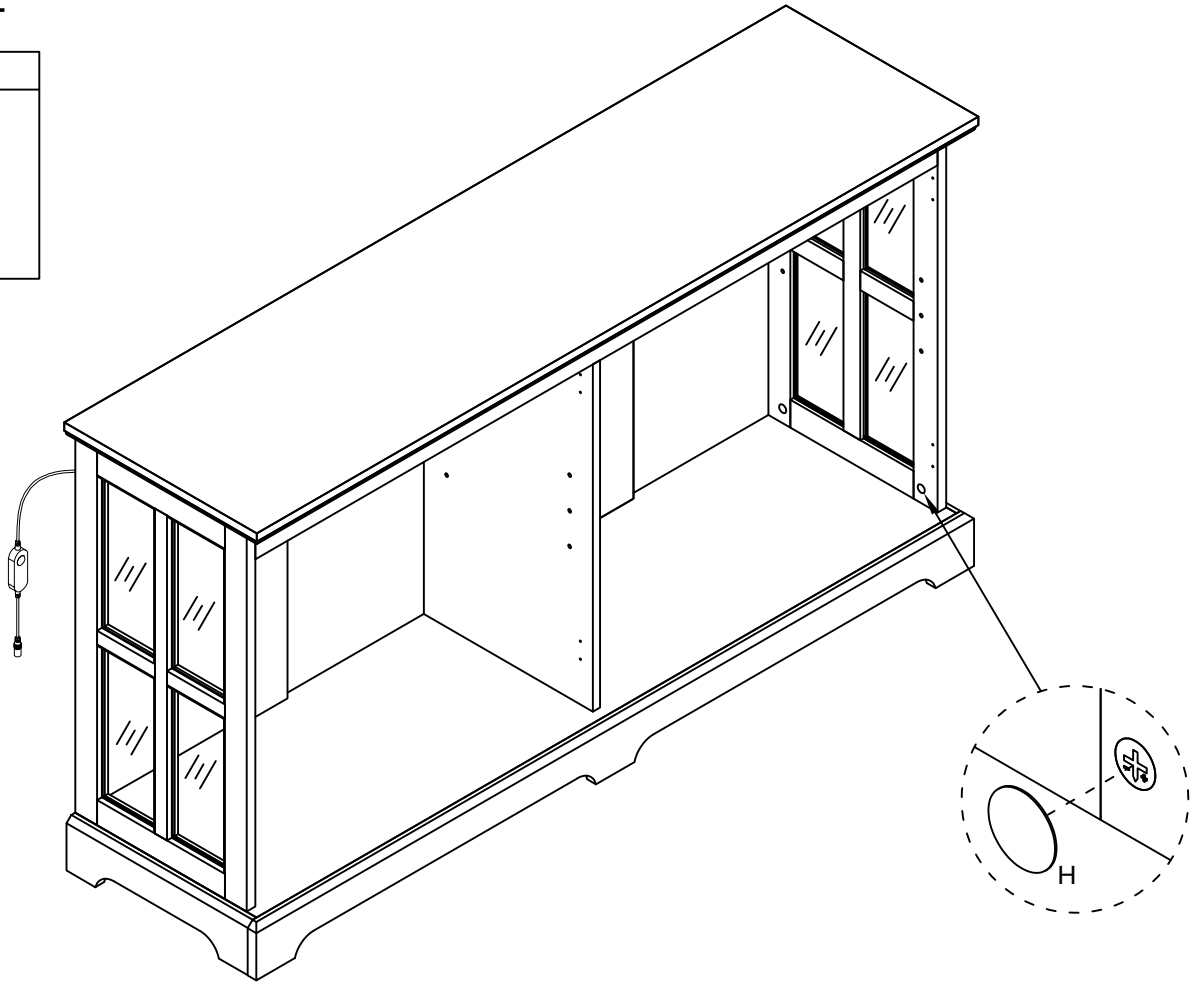

STEP15

Q X 1	R X 1
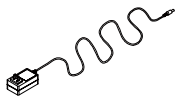	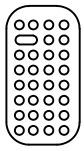

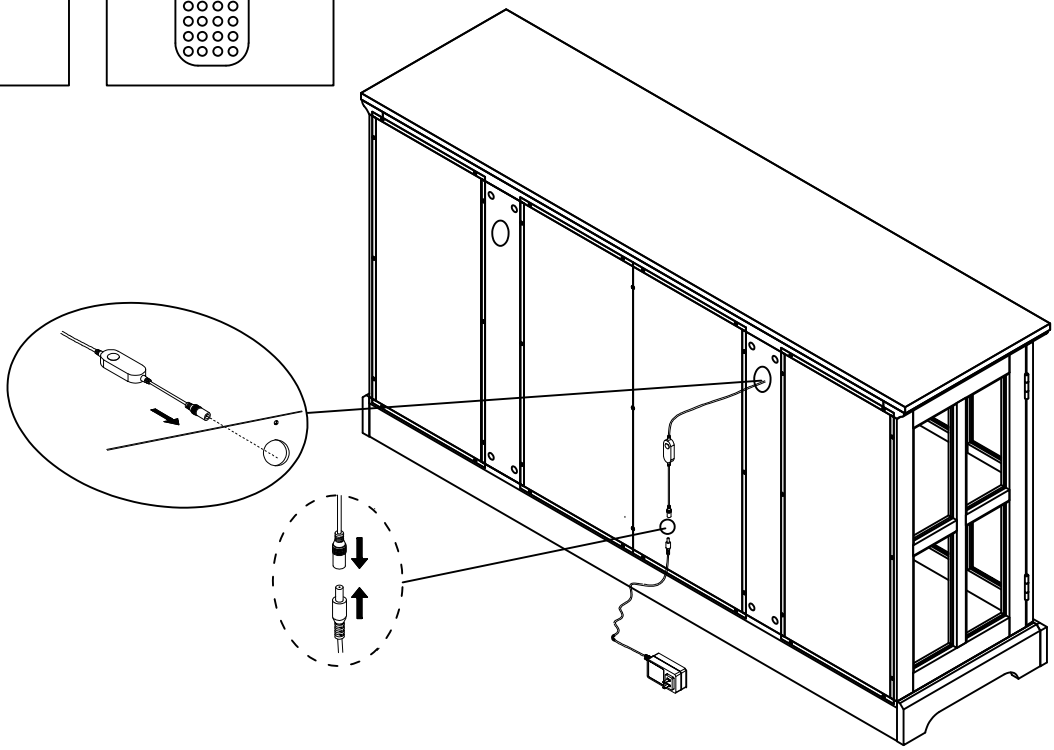

STEP16

I x 8
Ø3.5*14mm
M x 4
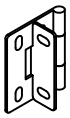

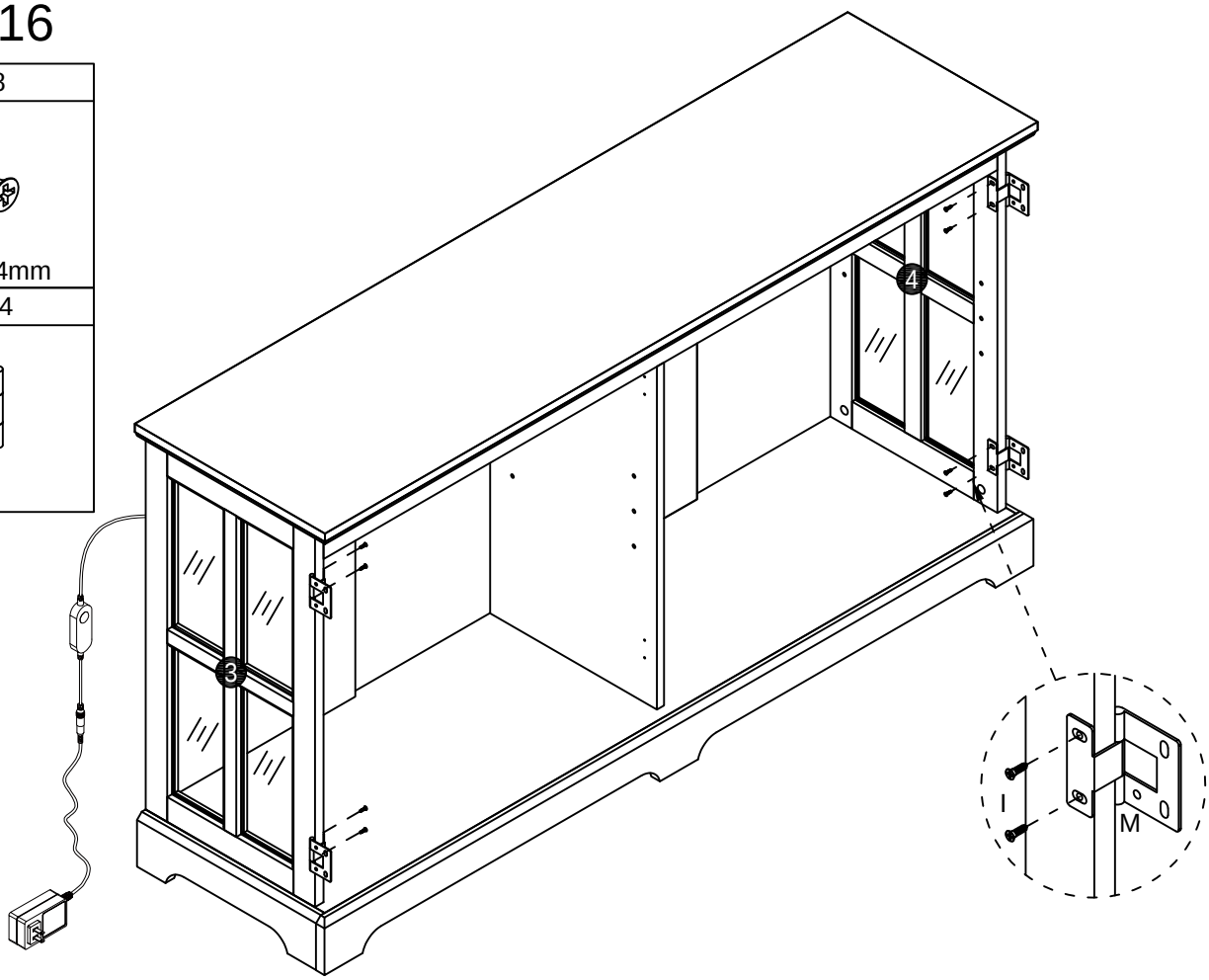

STEP17

K x 8

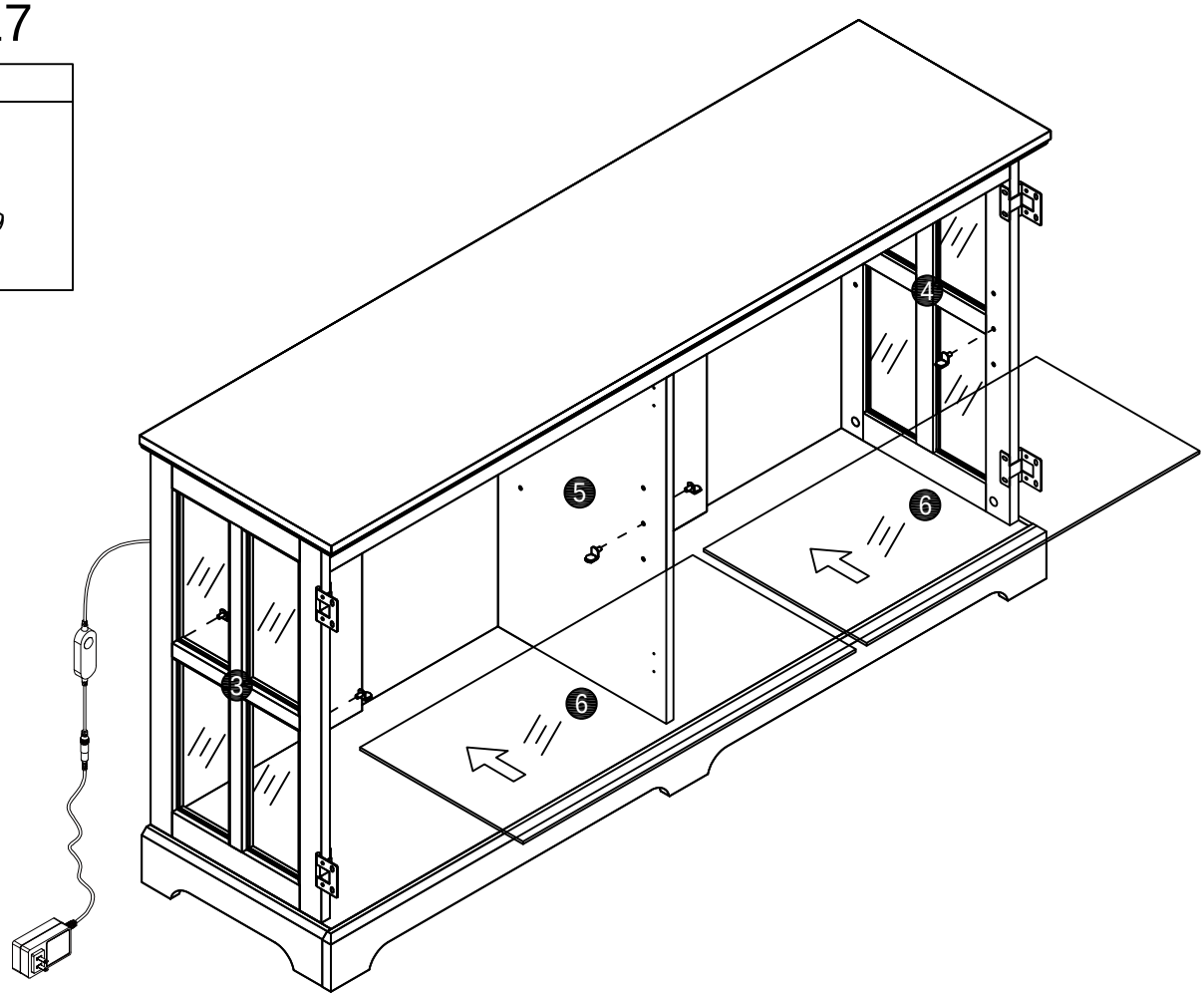

STEP18

D x 4
Ø3*12mm
E x 2
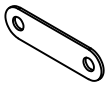

F x 2	I x 8
	Ø3.5*14mm
G x 2	O x 4
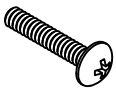 Ø4*25mm	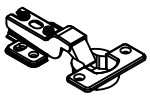

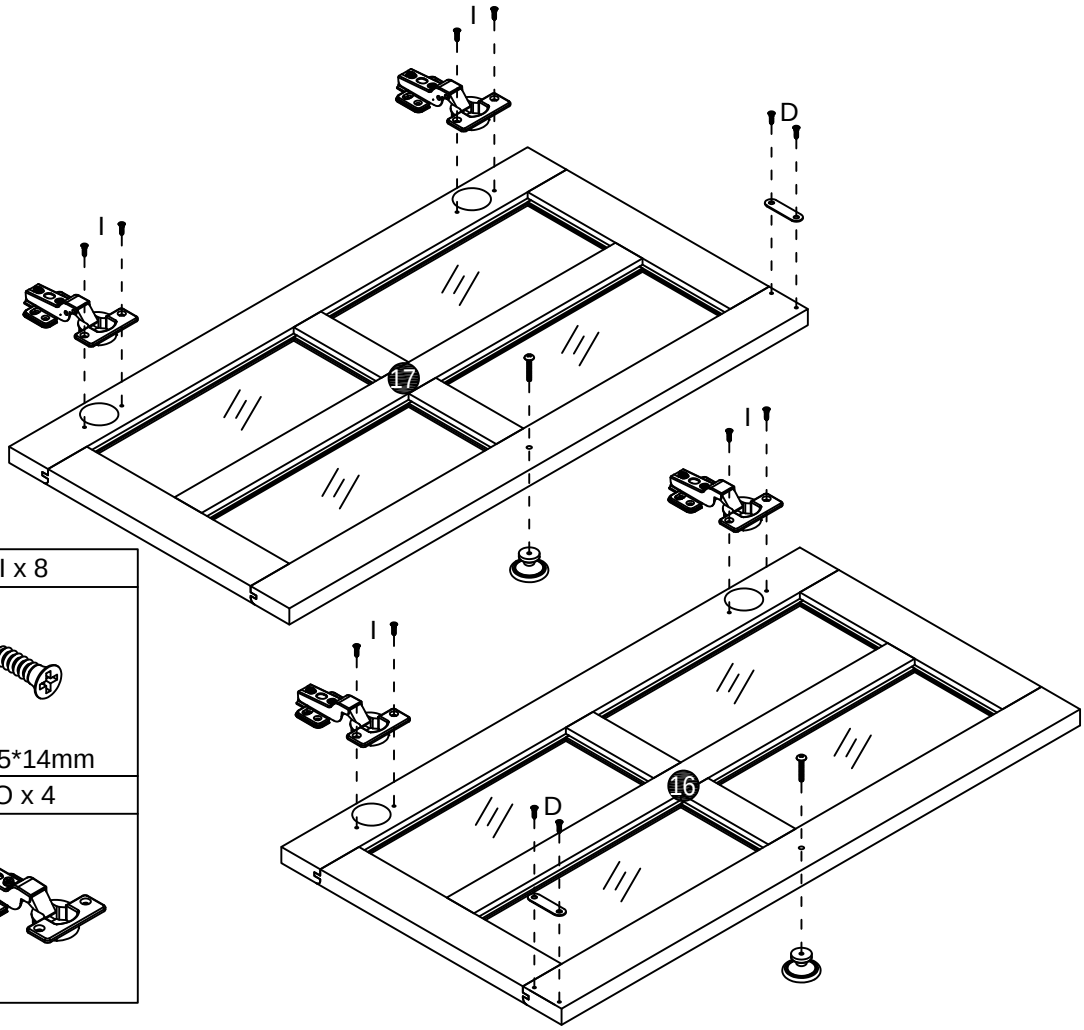

STEP19

I x 16
Ø3.5*14mm

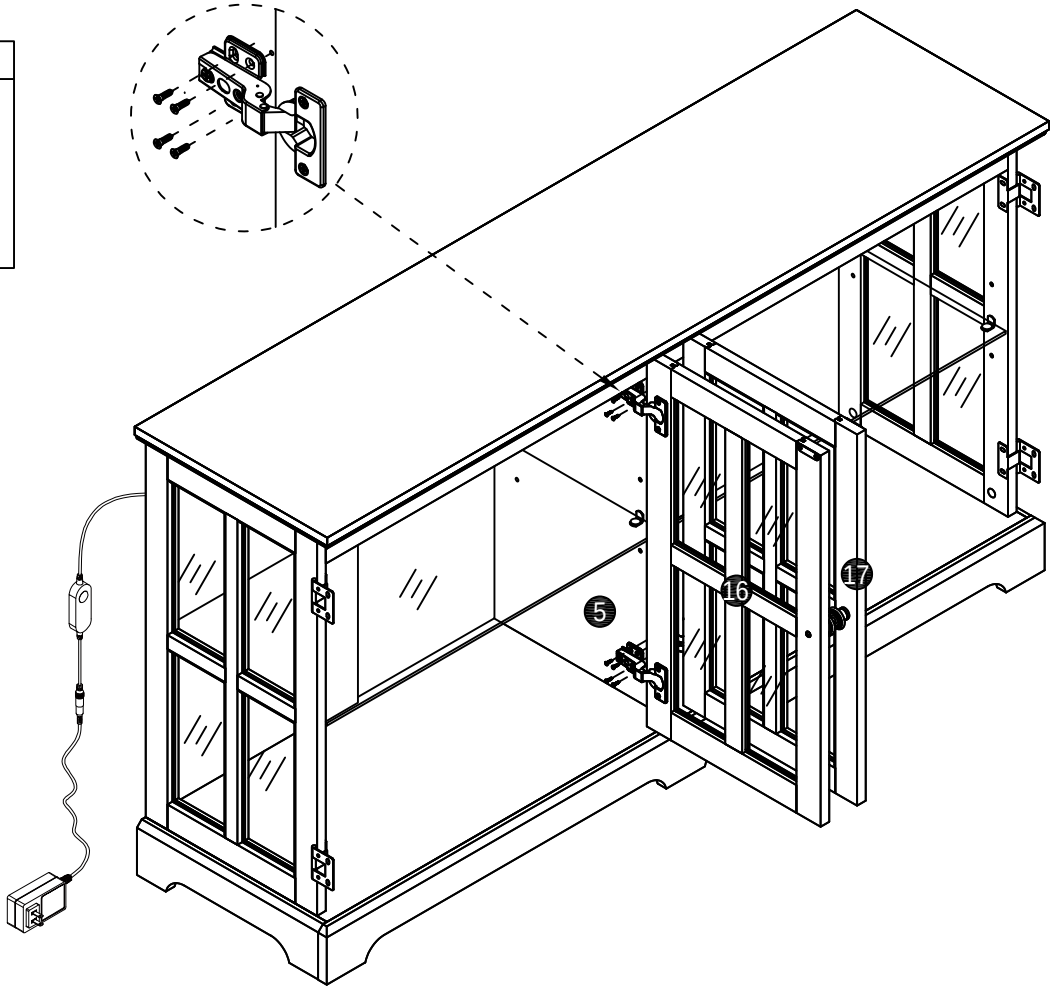

STEP20

F x 2
G x 2
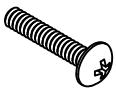 Ø4*25mm
D x 4
Ø3*12mm
E x 2
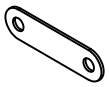

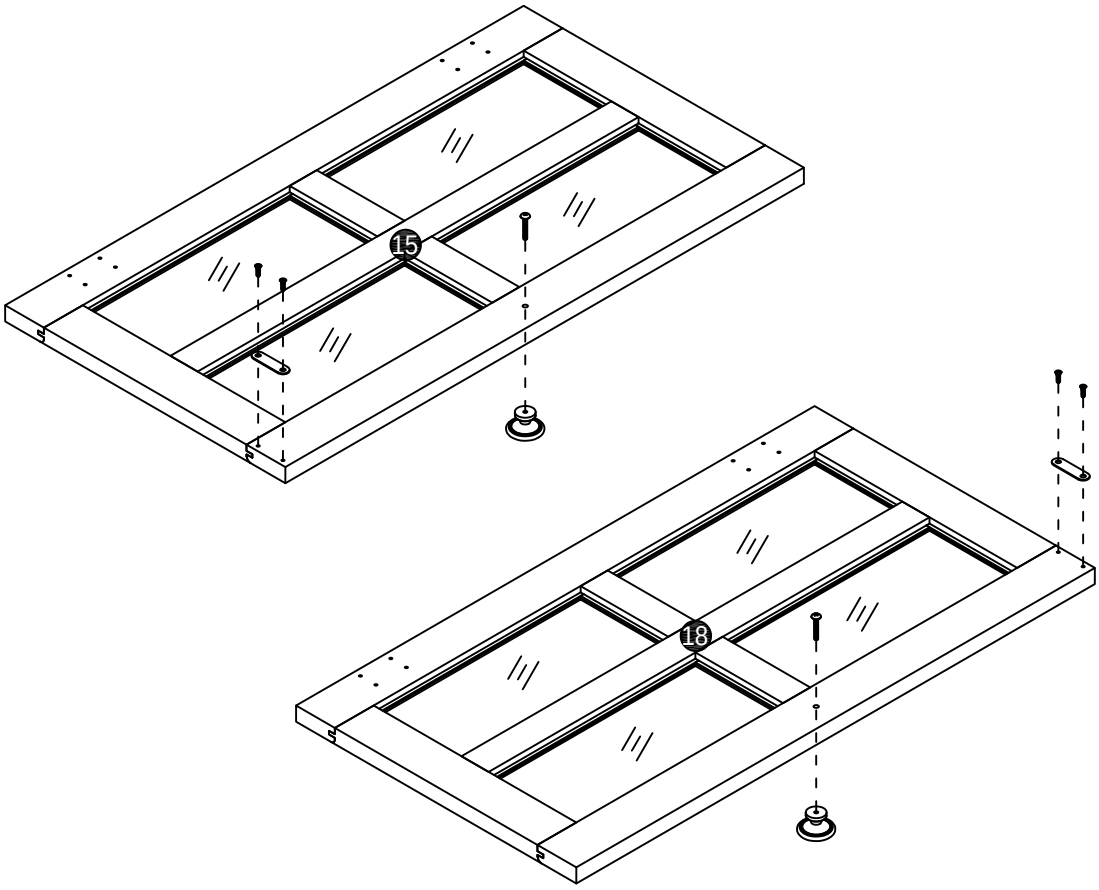

STEP21

I x 16
Ø3.5*14mm

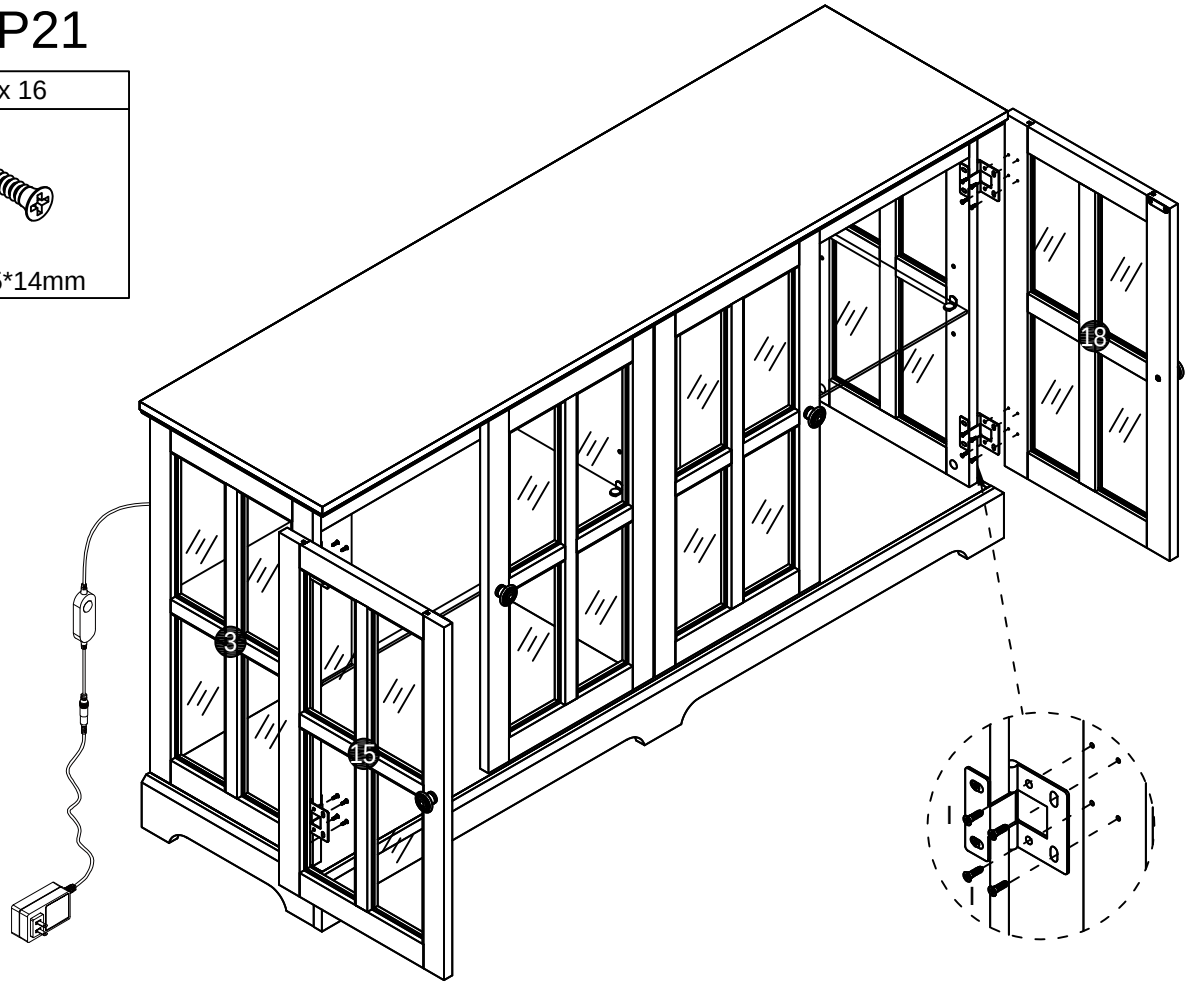

STEP22

N x 2
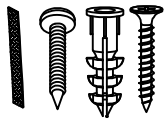

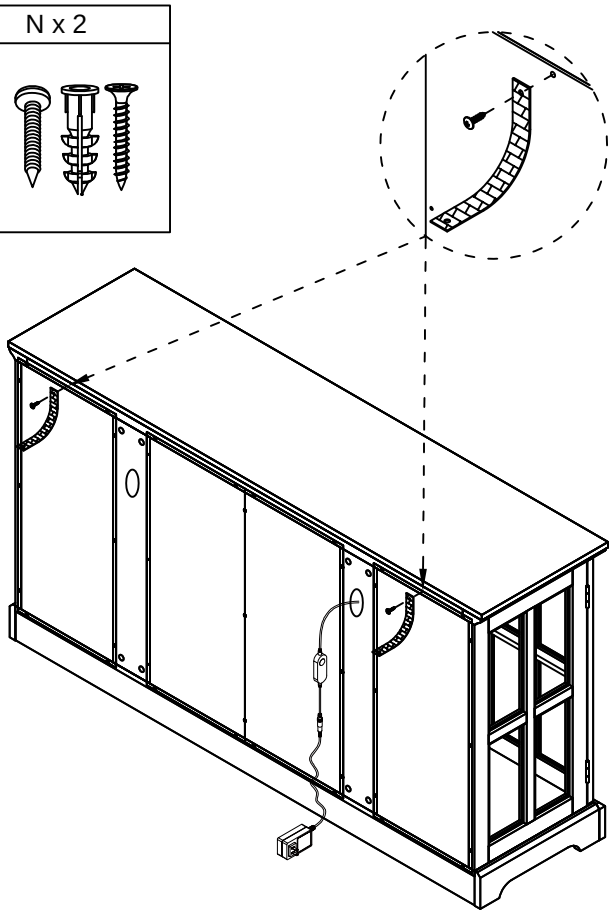

Wall

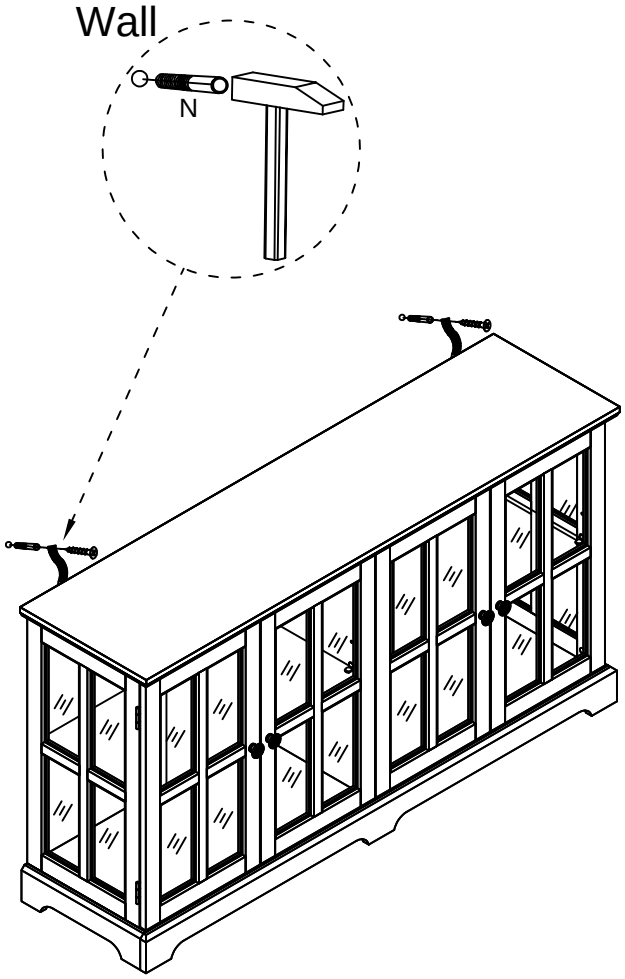

STEP23

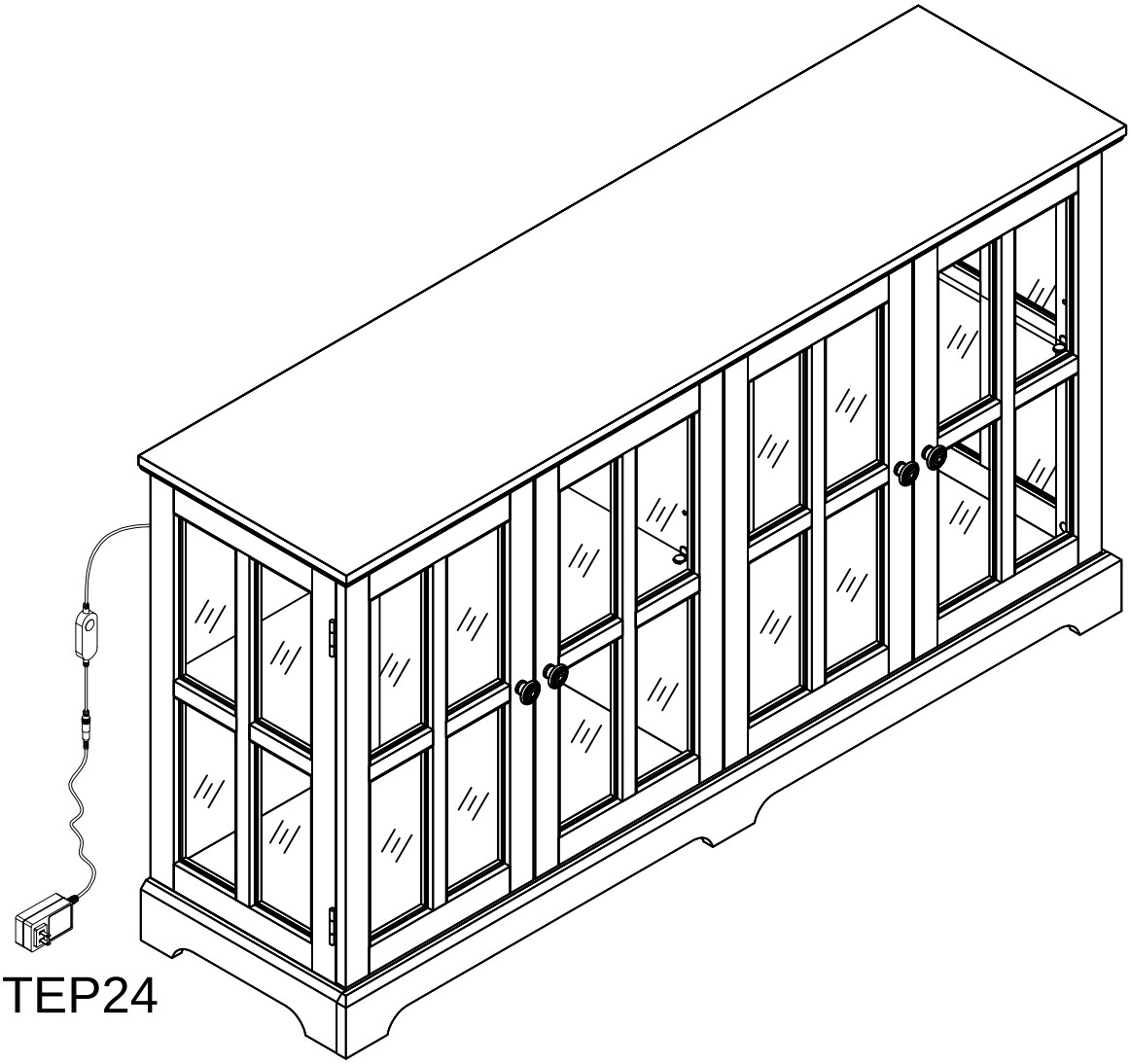

STEP24