Product Installation Instructions

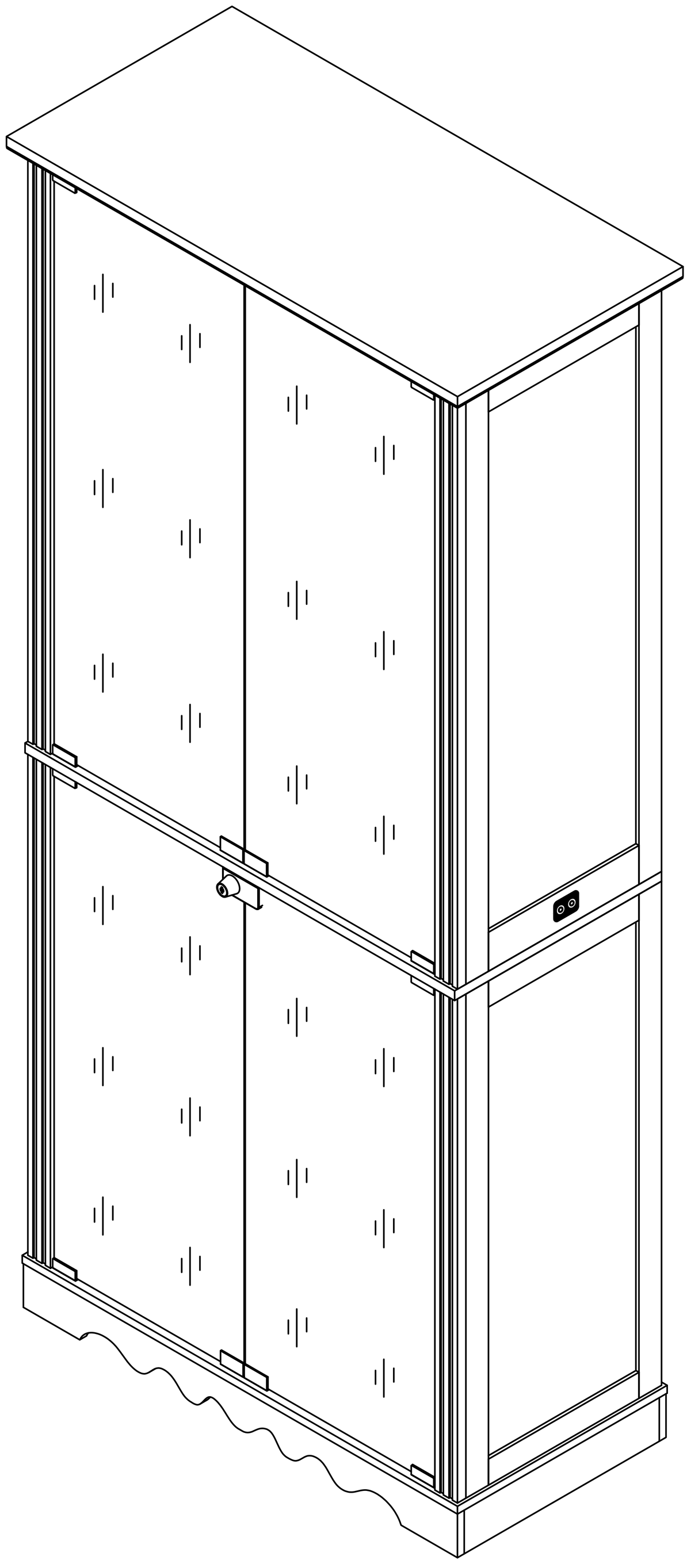

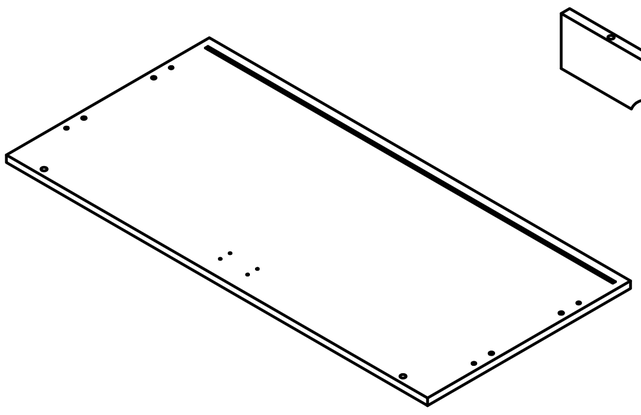

Ax1

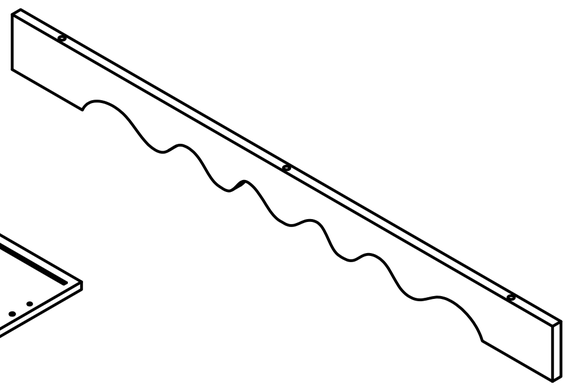

Bx1

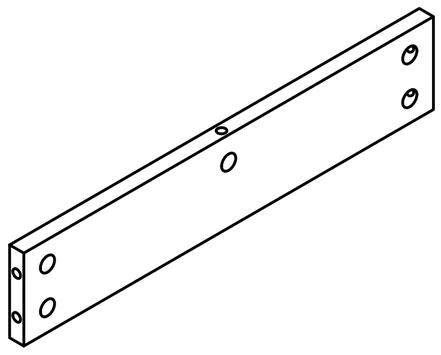

Cx2

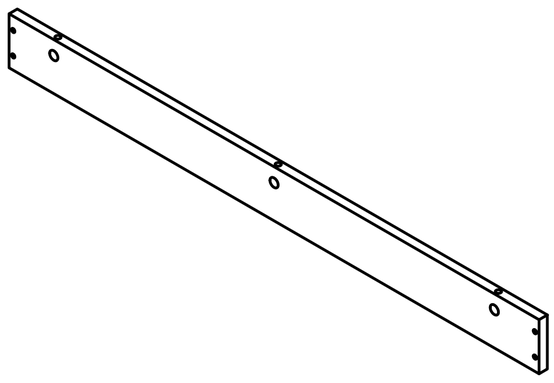

Dx1

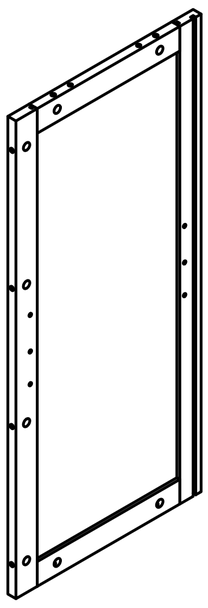

Ex2

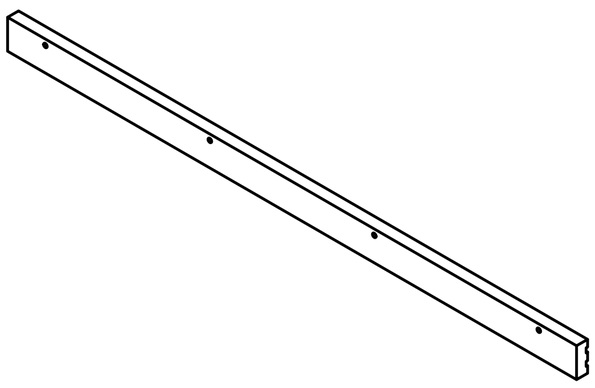

Fx2

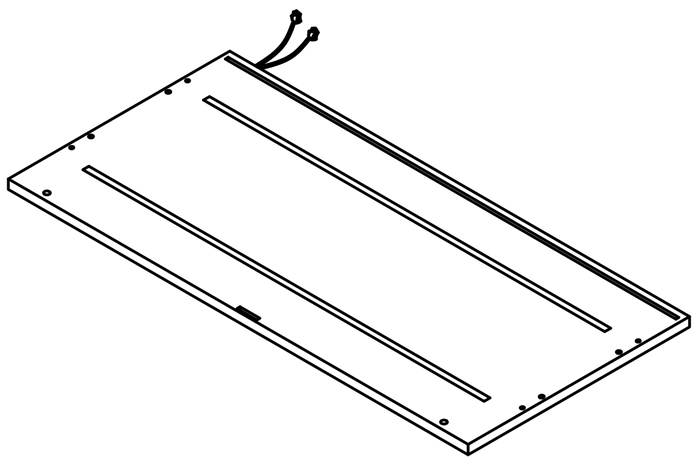

Gx1

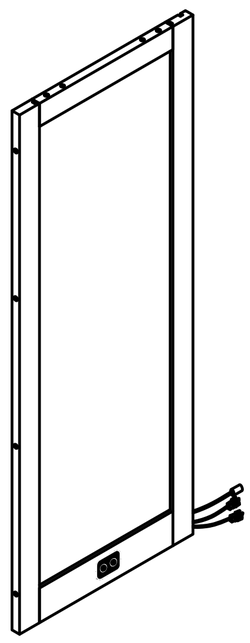

Hx1

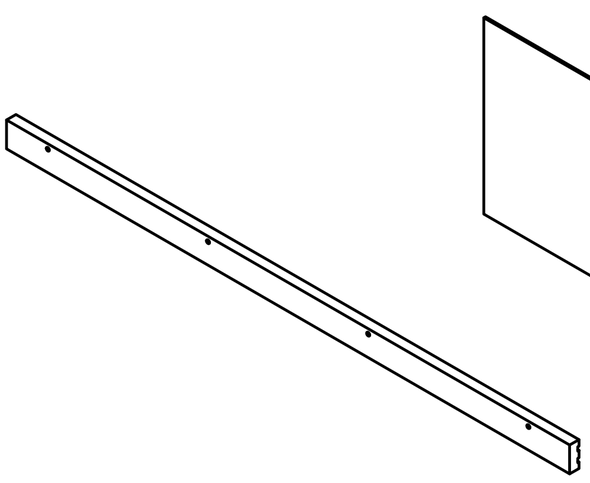

Ix2

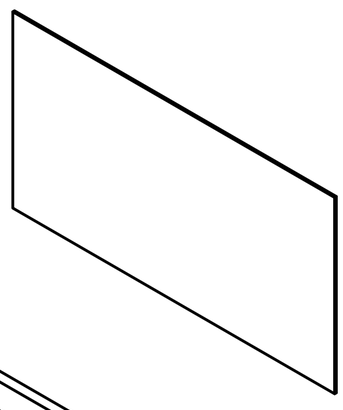

Jx2

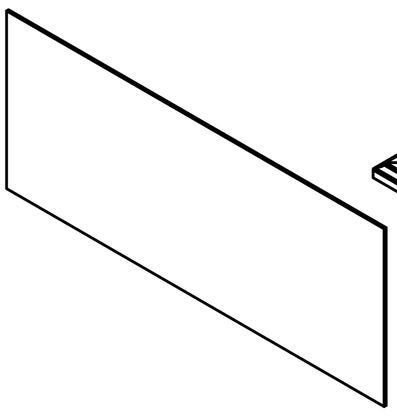

Kx3

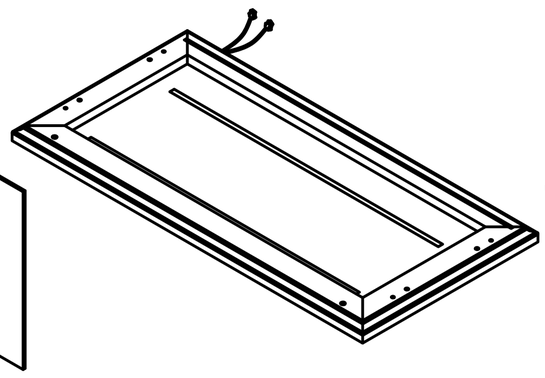

Lx1

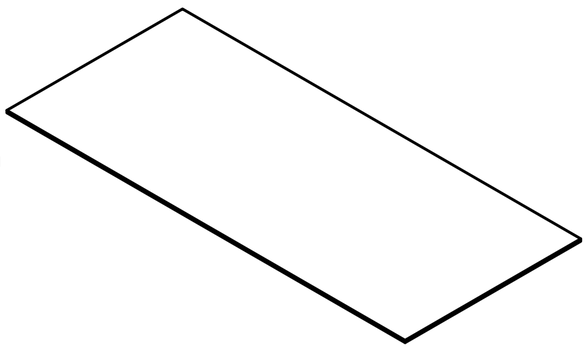

Mx3

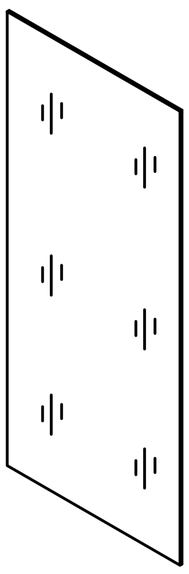

Nx2

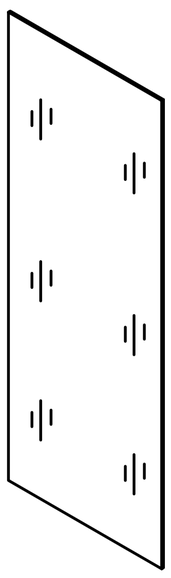

0x2

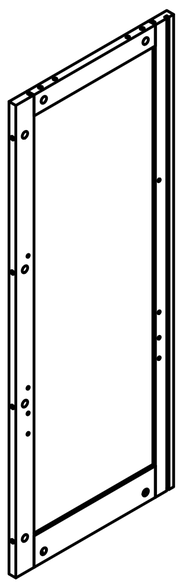

Px1

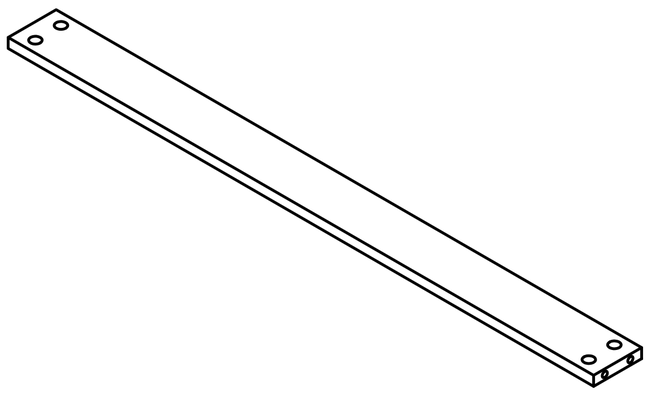

Qx3

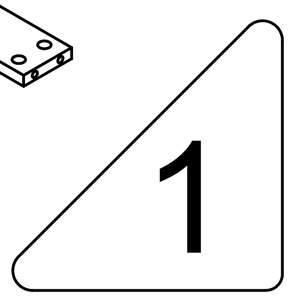

Accessories list

1		Two in one screw (6x28mm)	60pcs +3pcs
2		Two in one nut (10x12mm)	60pcs +3pcs
3		Wood Chipping (6x30mm)	16pcs +4pcs
4		Non-slip pads	6pcs
5		Fixing clip & screw (3x16mm)	18pcs +2pcs
6		Wire clamp	2pcs +2pcs
7		Laminate Support Nail	12pcs +2pcs
8		Rebound device & Screw (3x16mm)	8pcs +2pcs / 2pcs
		Iron sheet	4cs
		Hinge	8pcs / 4cs / 4cs
9		Backboard card strip	3pcs
10		Double door glass lock Key	2pcs / 1pcs
12		Forked line	2pcs
		AC/DC Adapter (12V⎓3.0A)	1pcs
11	Anti Fall Hardware x2 x4 x2 (3.5x14mm) x2 x2 (4x45mm)		

Double-head screwdriver, use as required

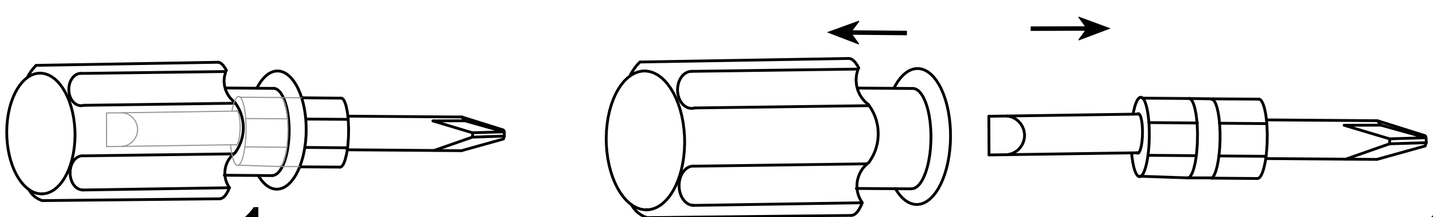

1pcs

Product structure decomposition

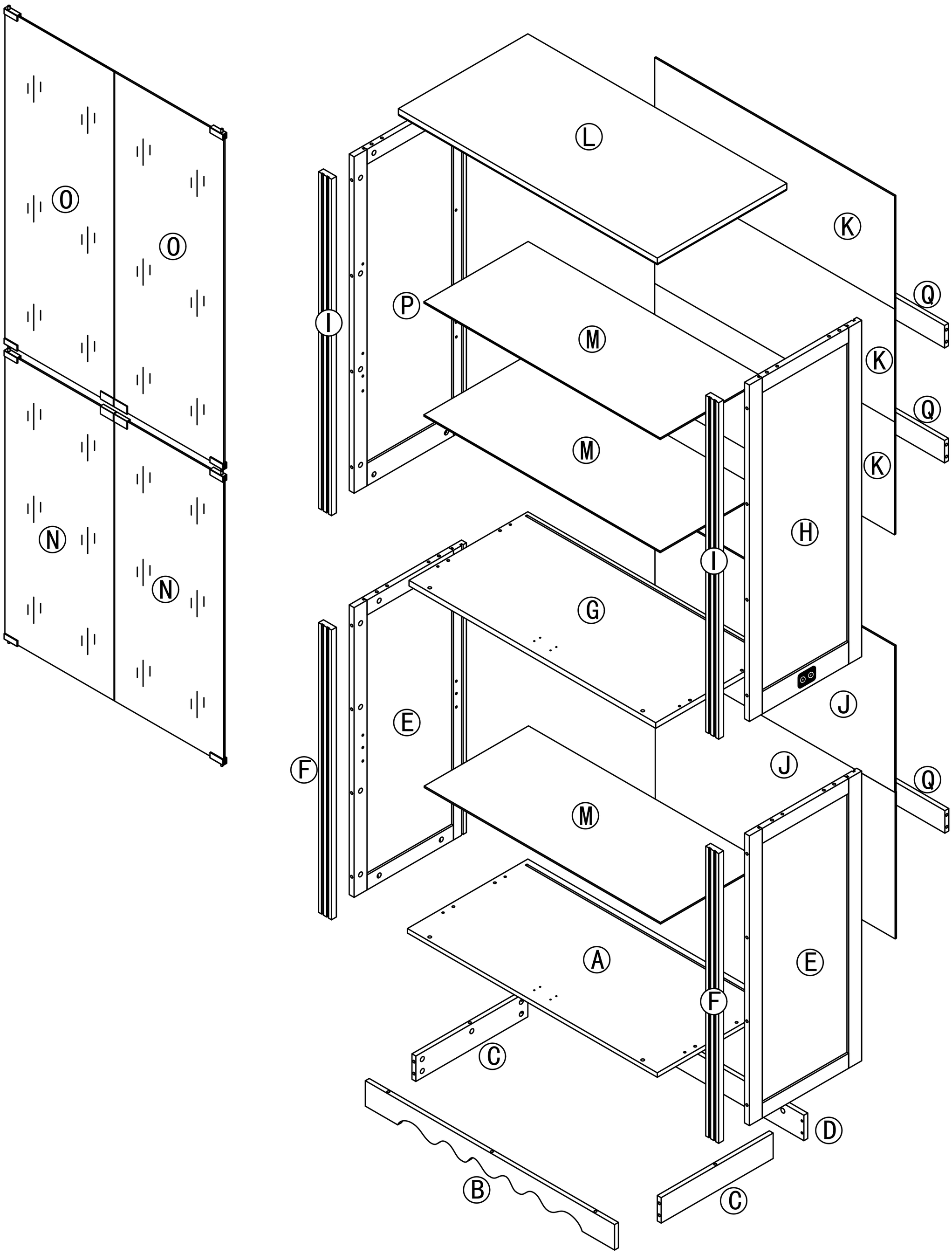

3

Use parts ① and ②

Step1

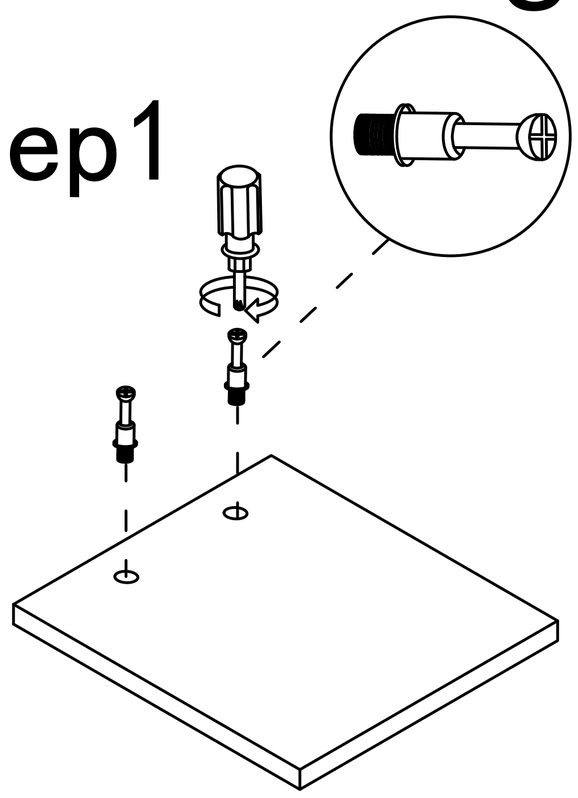

Step2

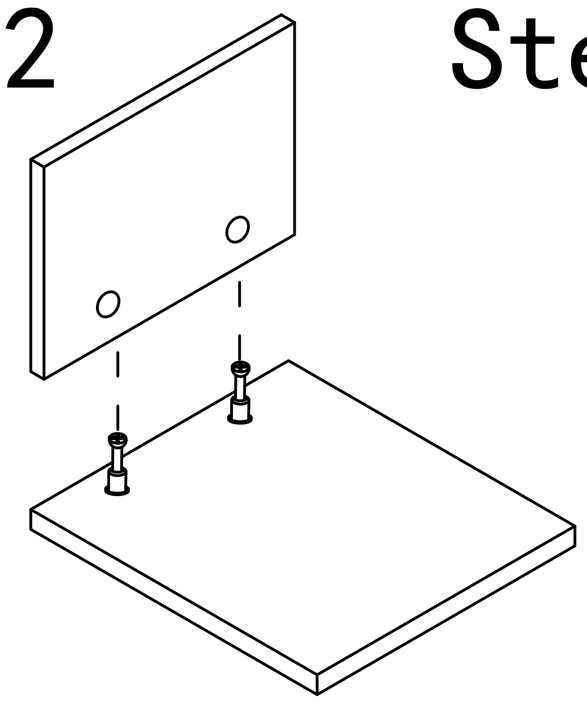

Step3

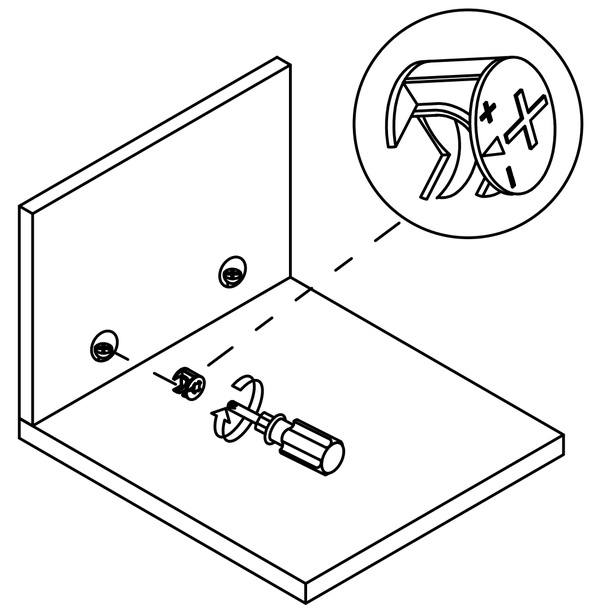

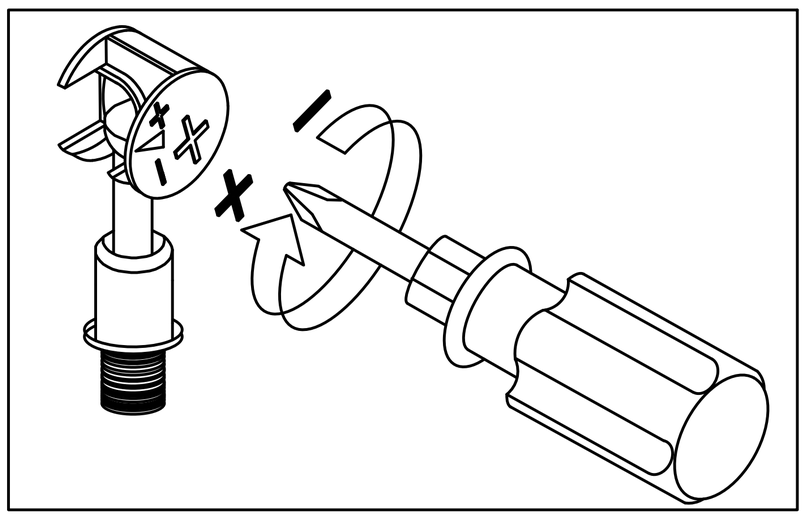

Use a screwdriver to lock in the direction of the "+" sign

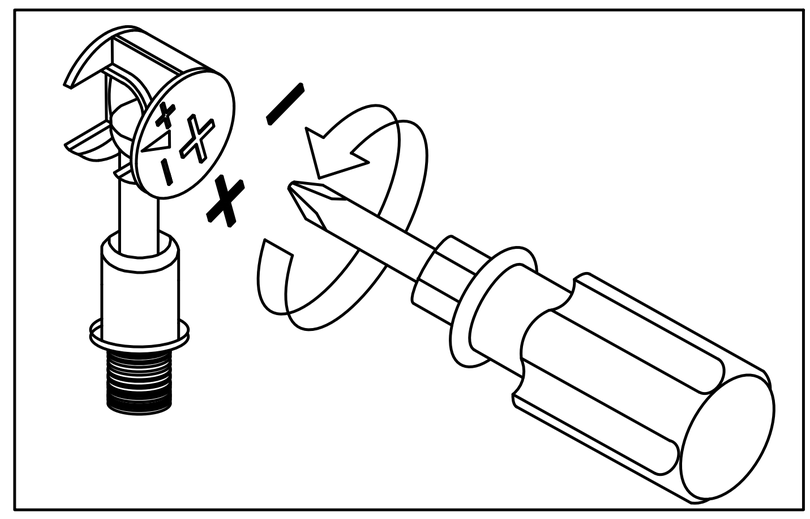

Disassemble along the direction of "-" sign

Step 1

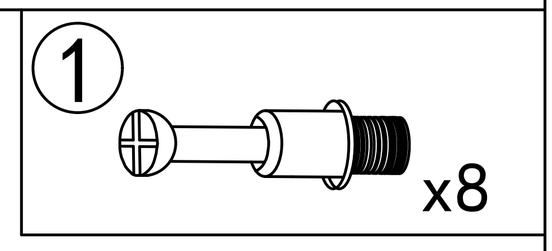

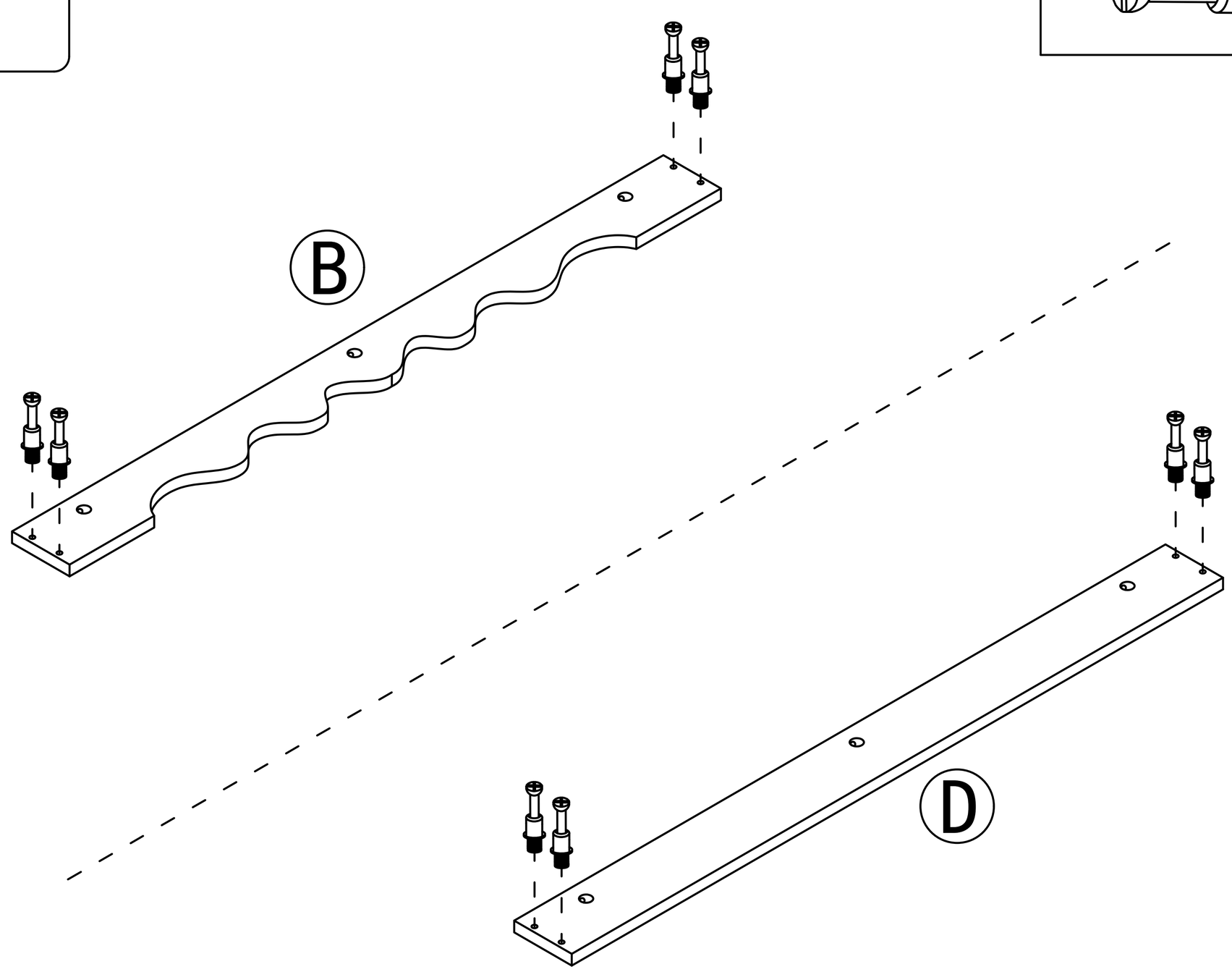

Step 2

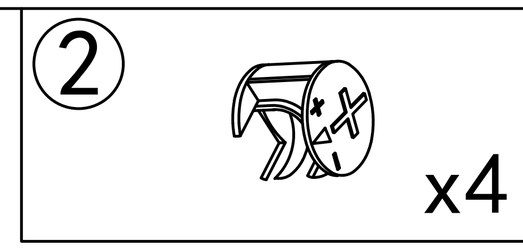

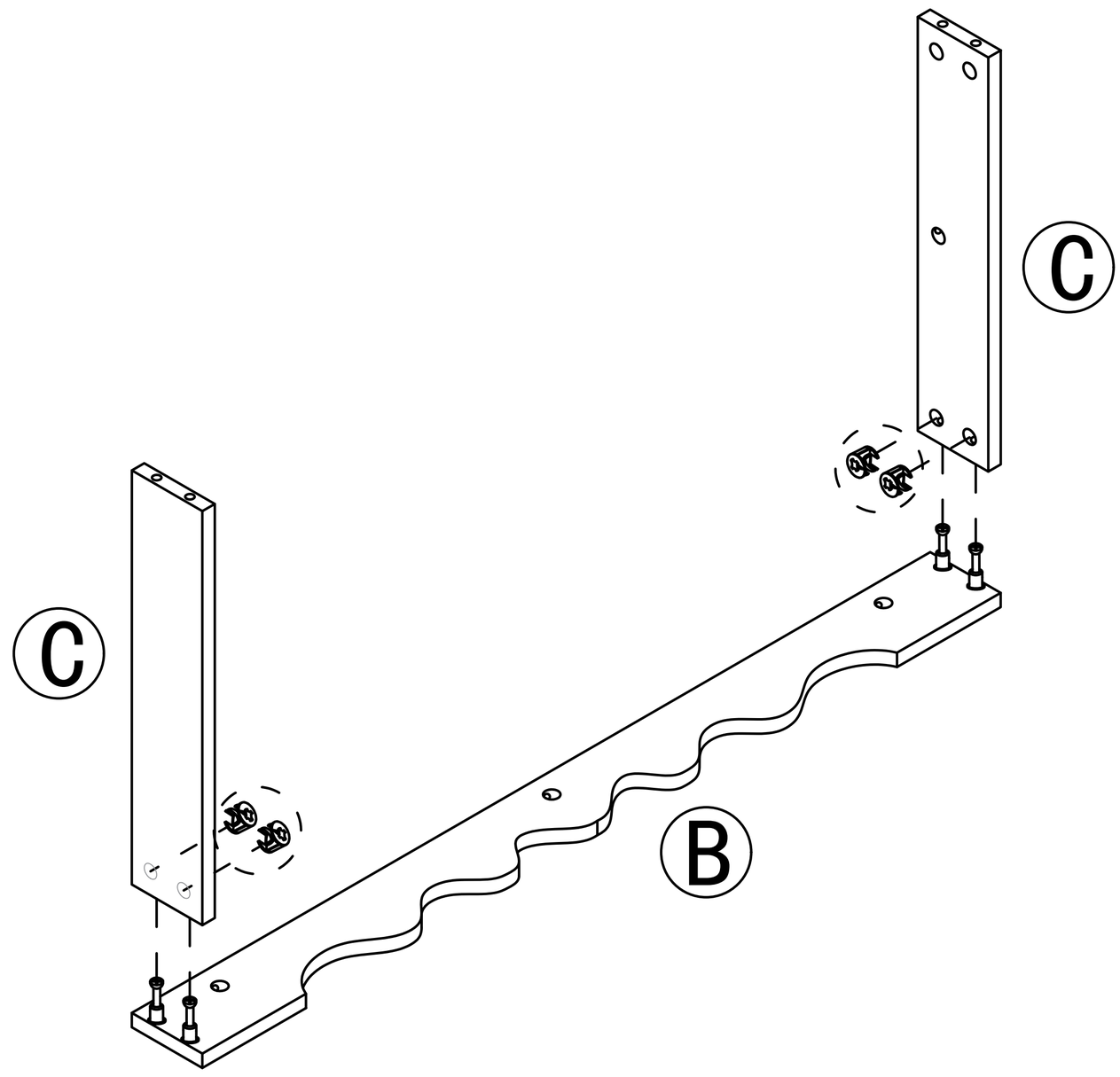

Step 3

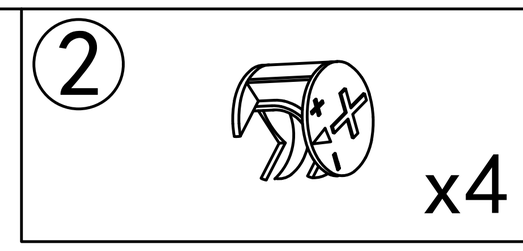

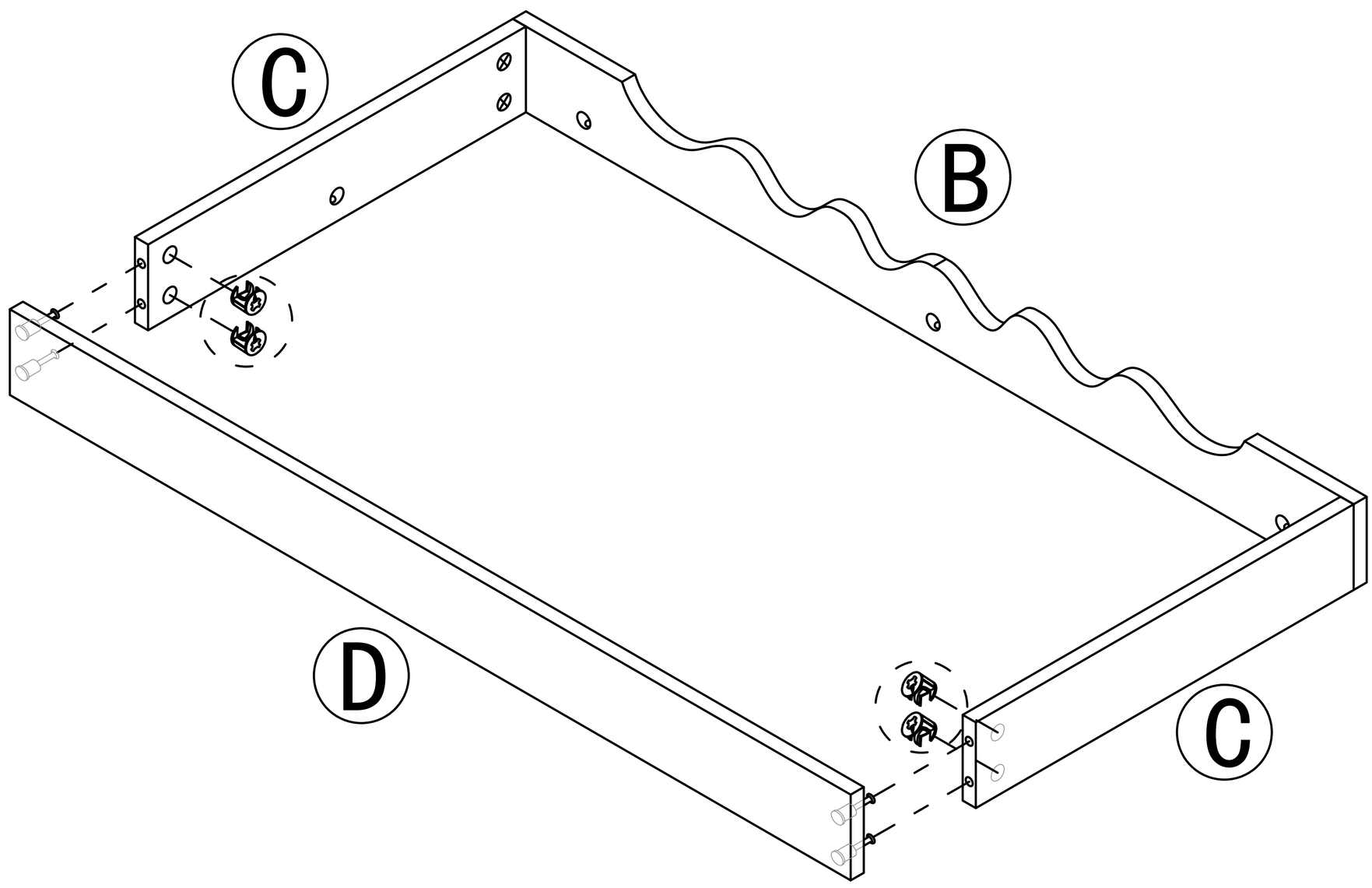

Step 4

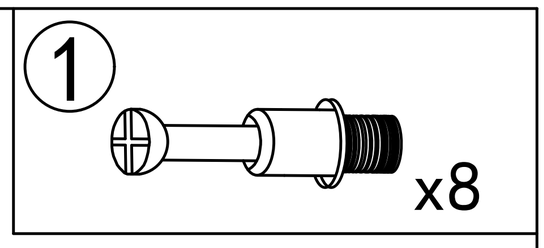

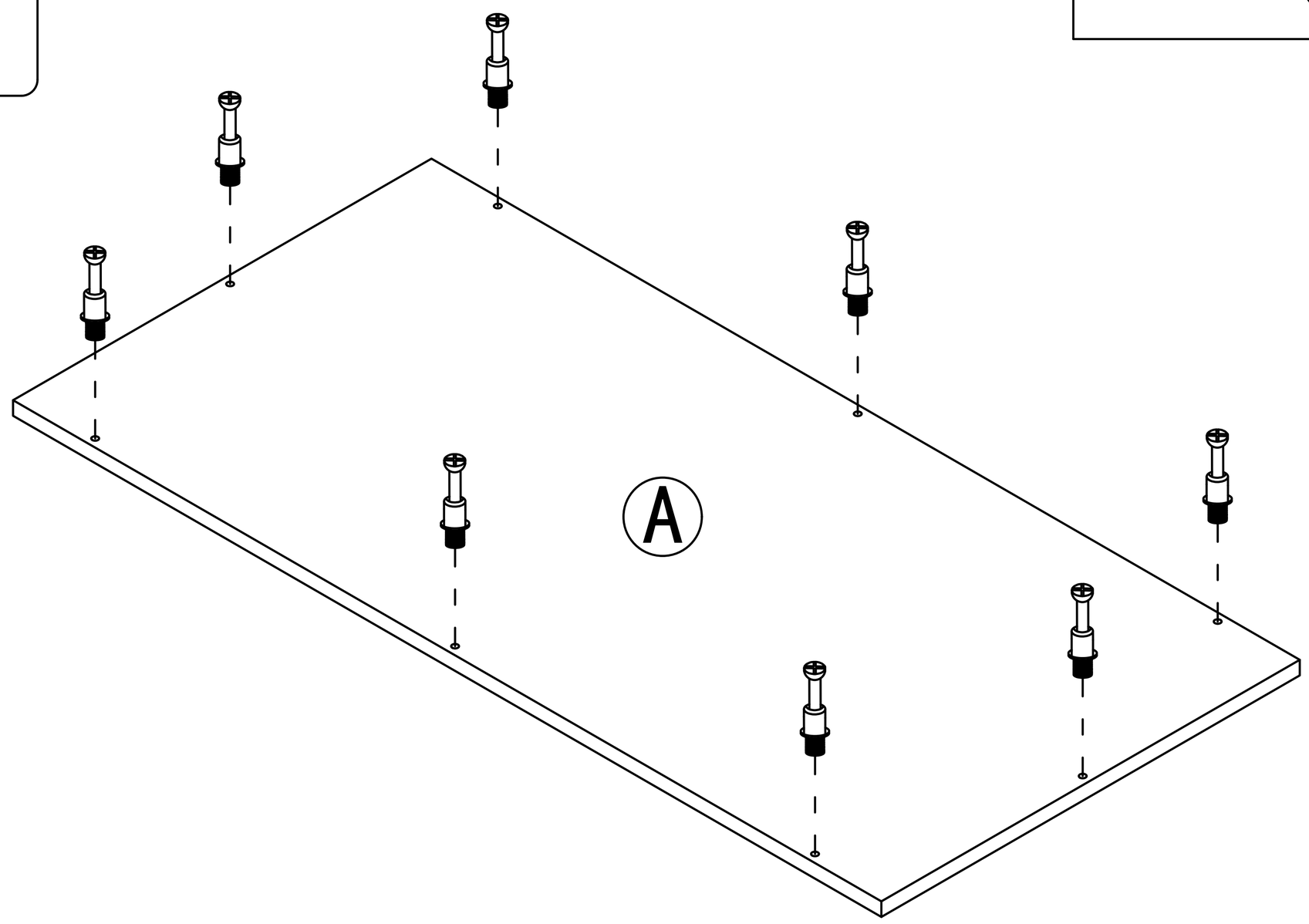

Step 5

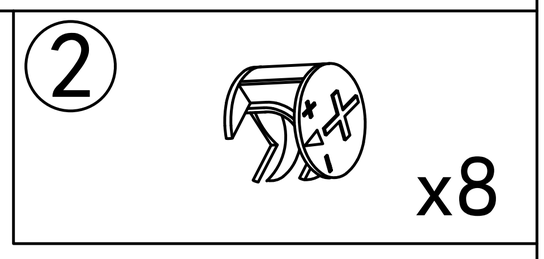

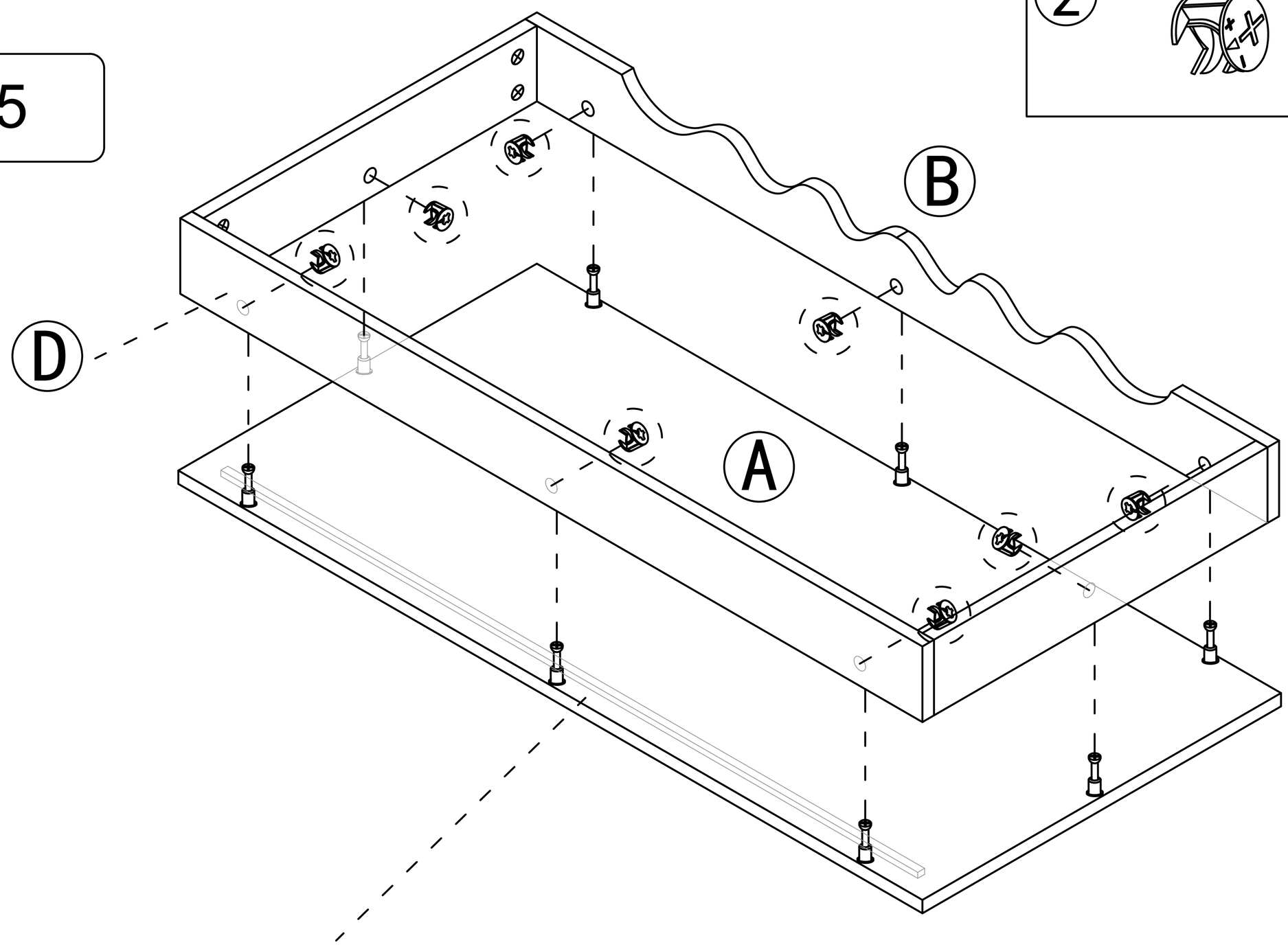

Attention: There is a groove behind the D boardin
the position where the D board is installed

Step 6

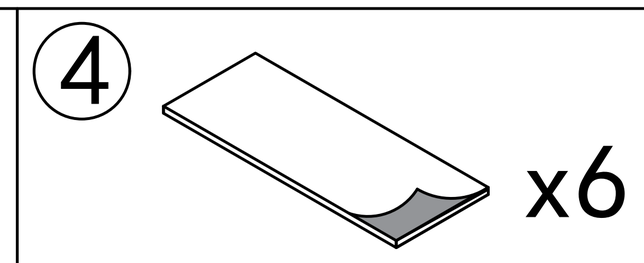

Tear off release paper and stick the black foot pad on the board

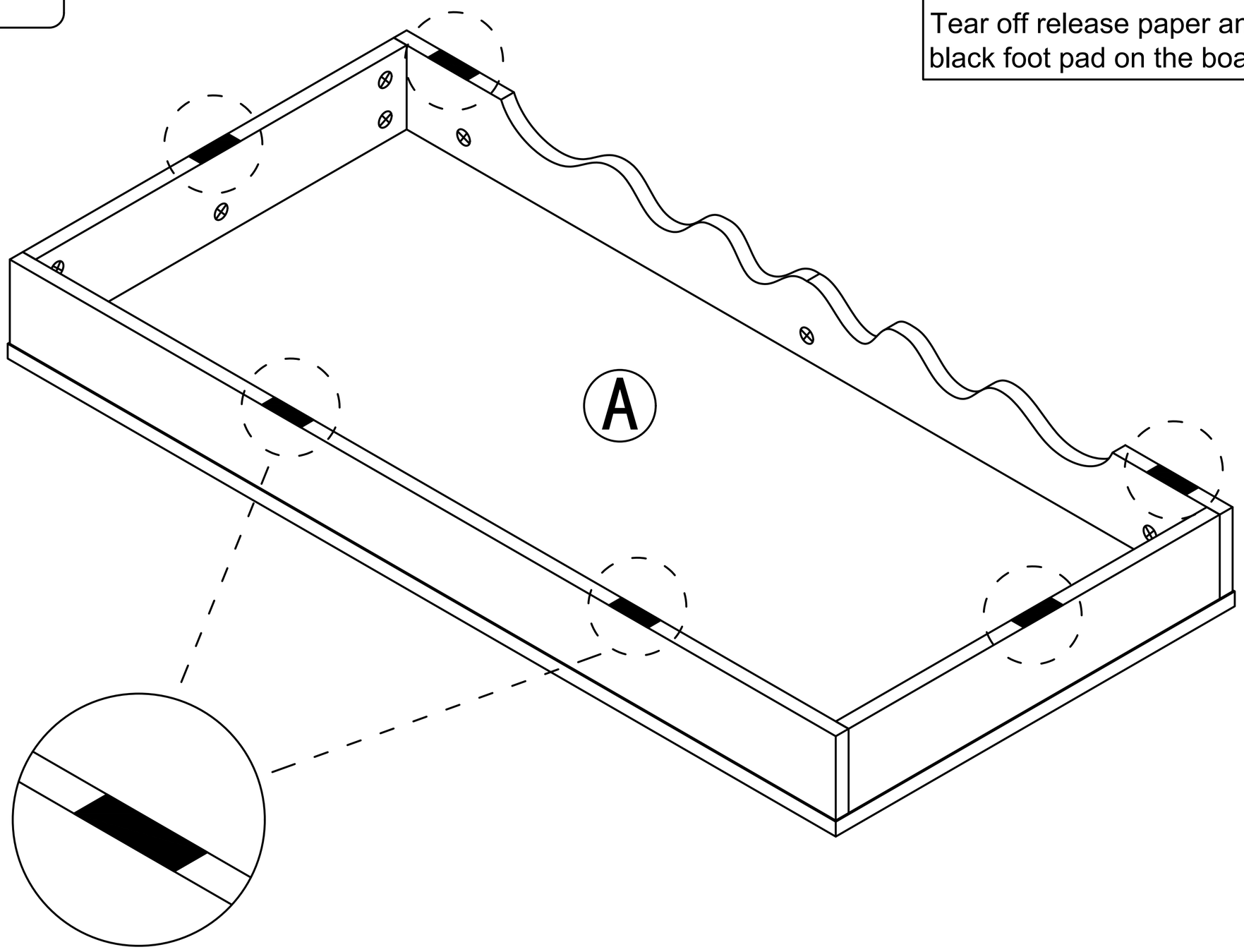

Step 7

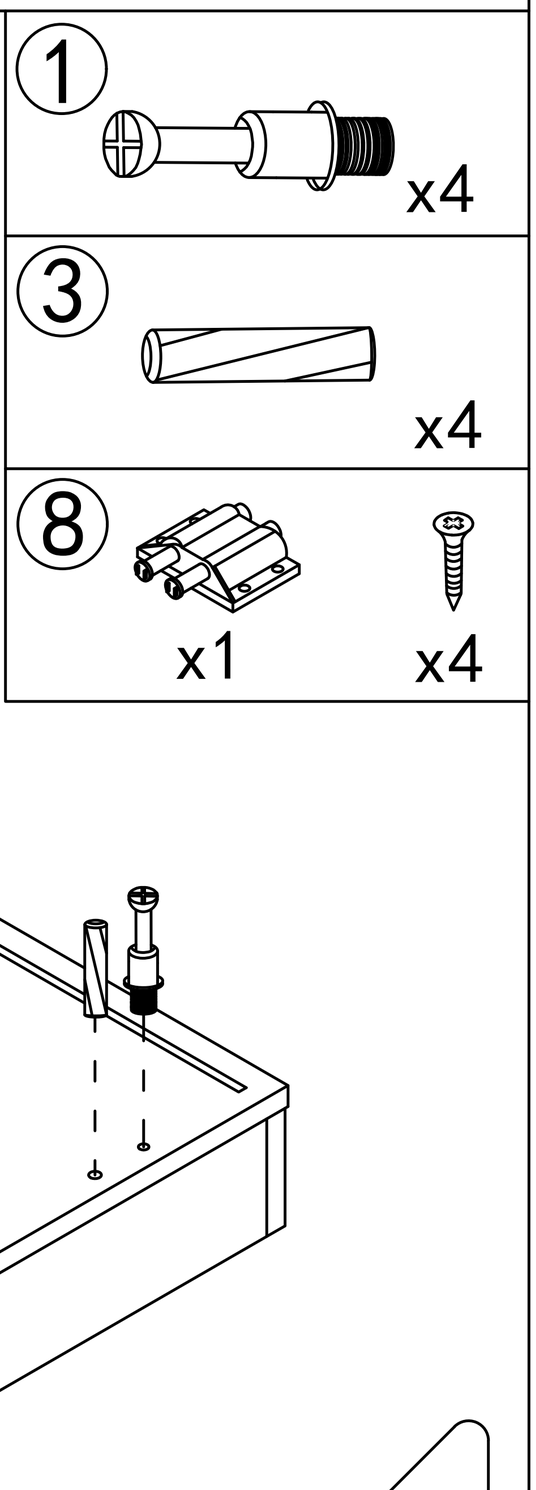

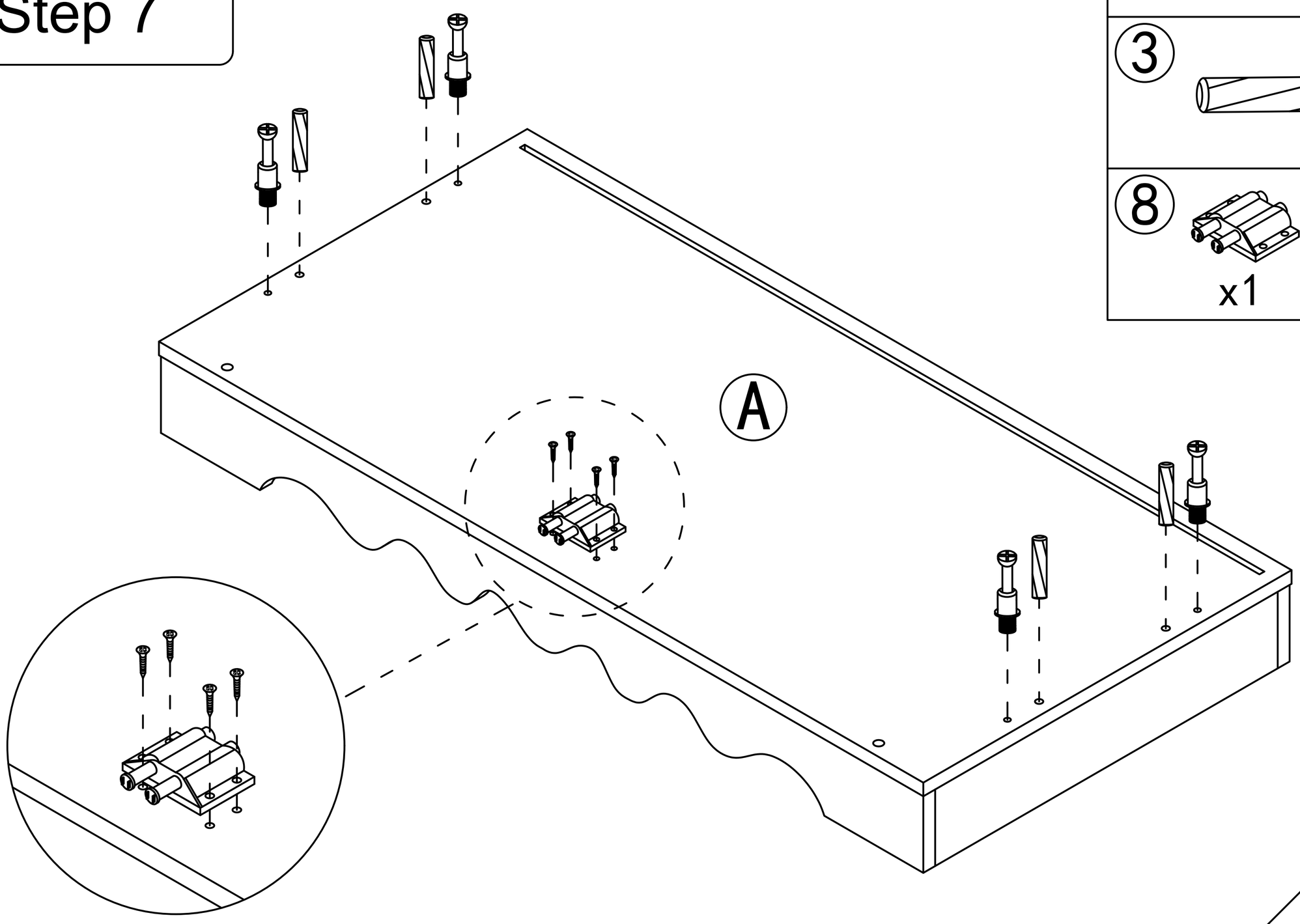

Step 8

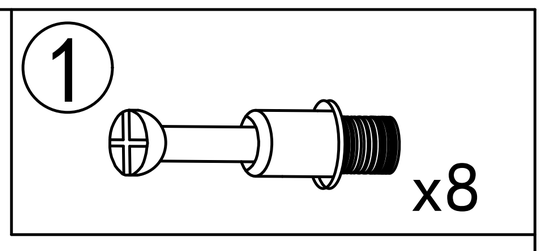

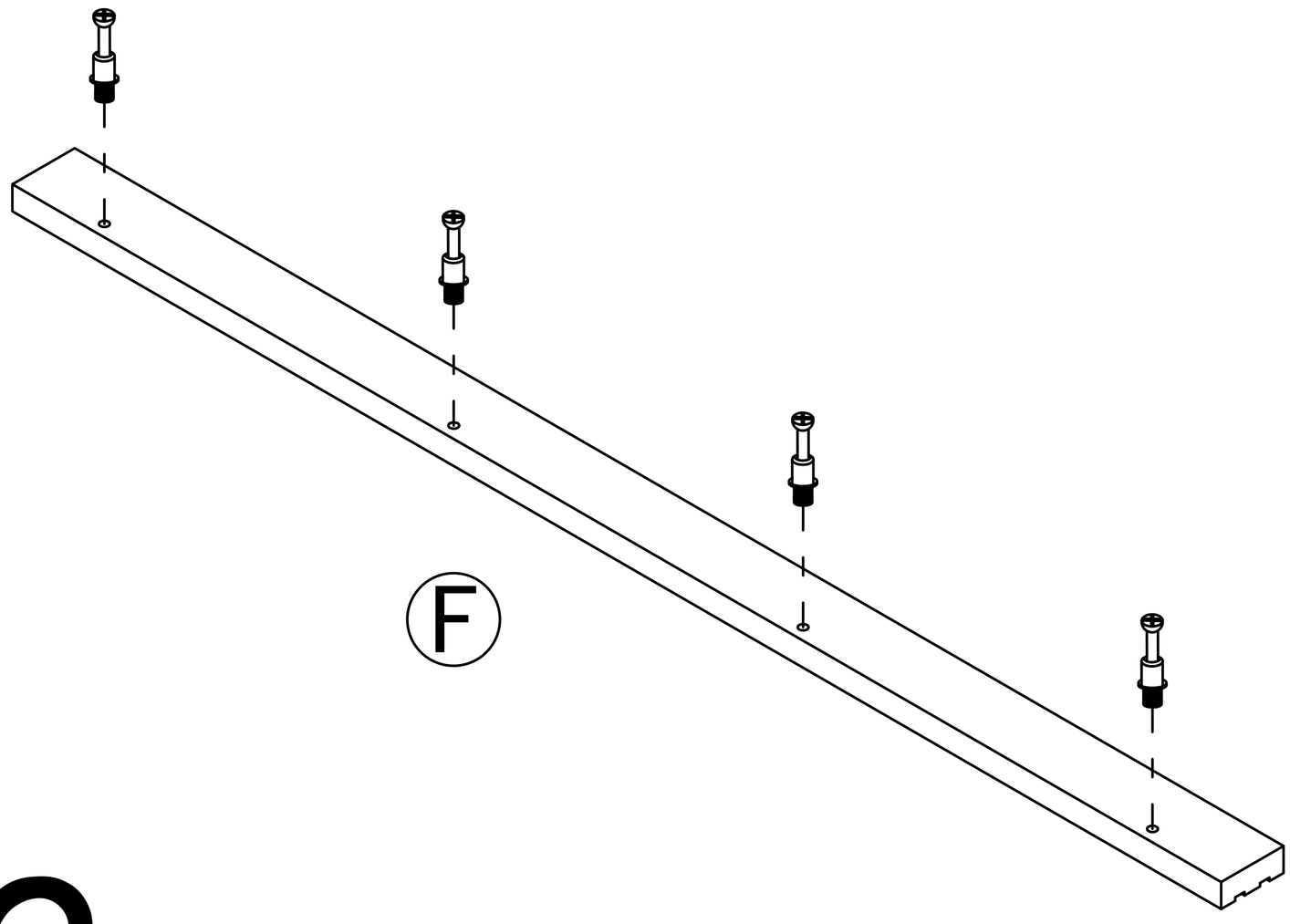

F x2

Step 9

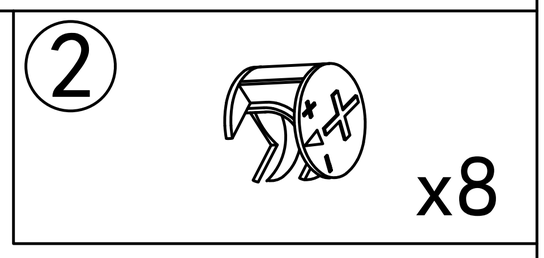

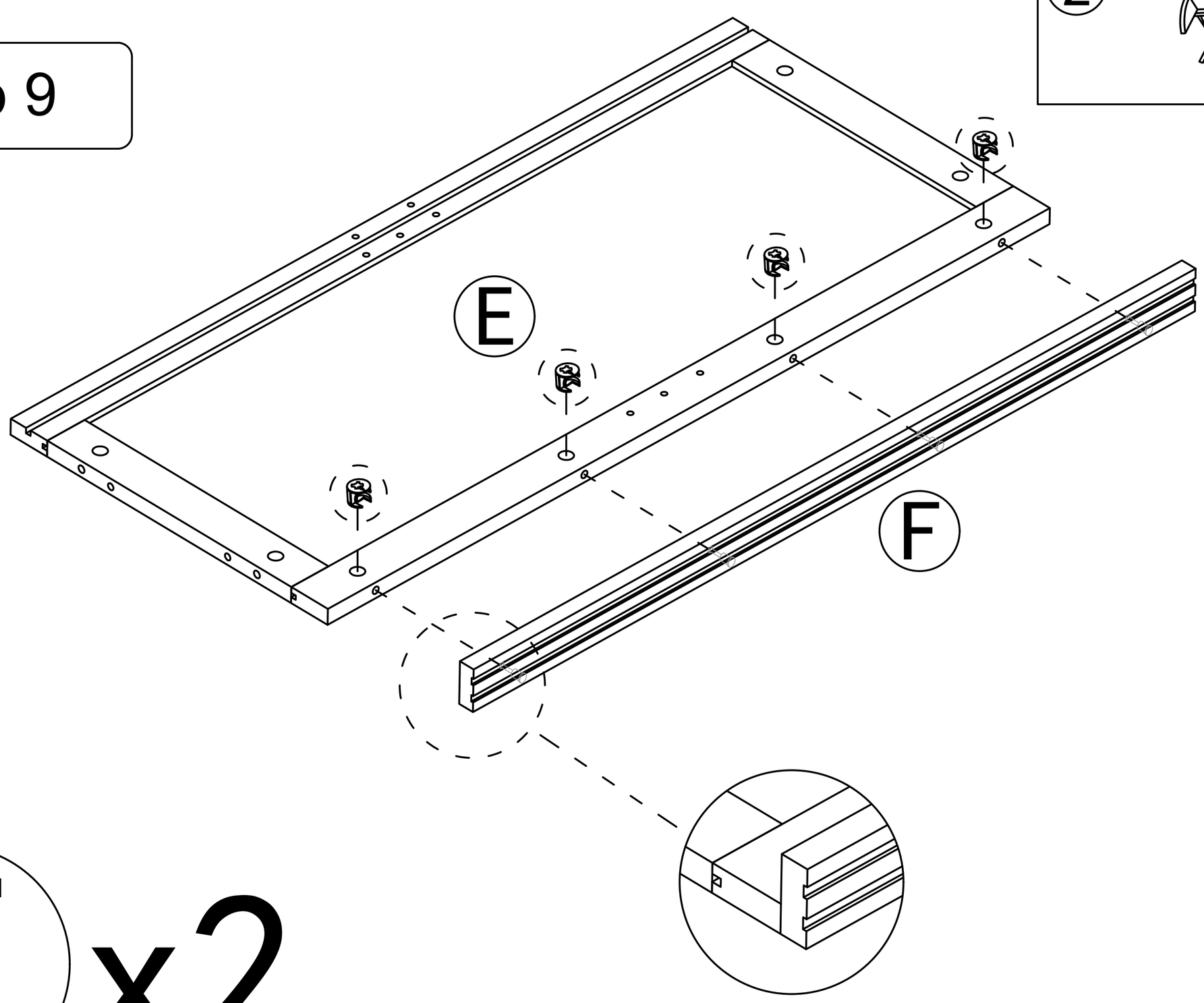

E x2

Step 10

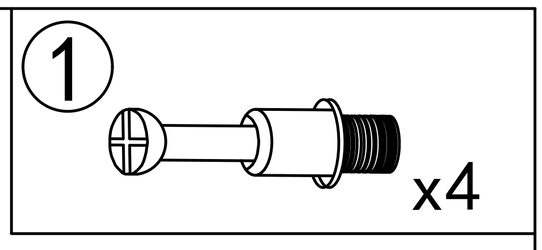

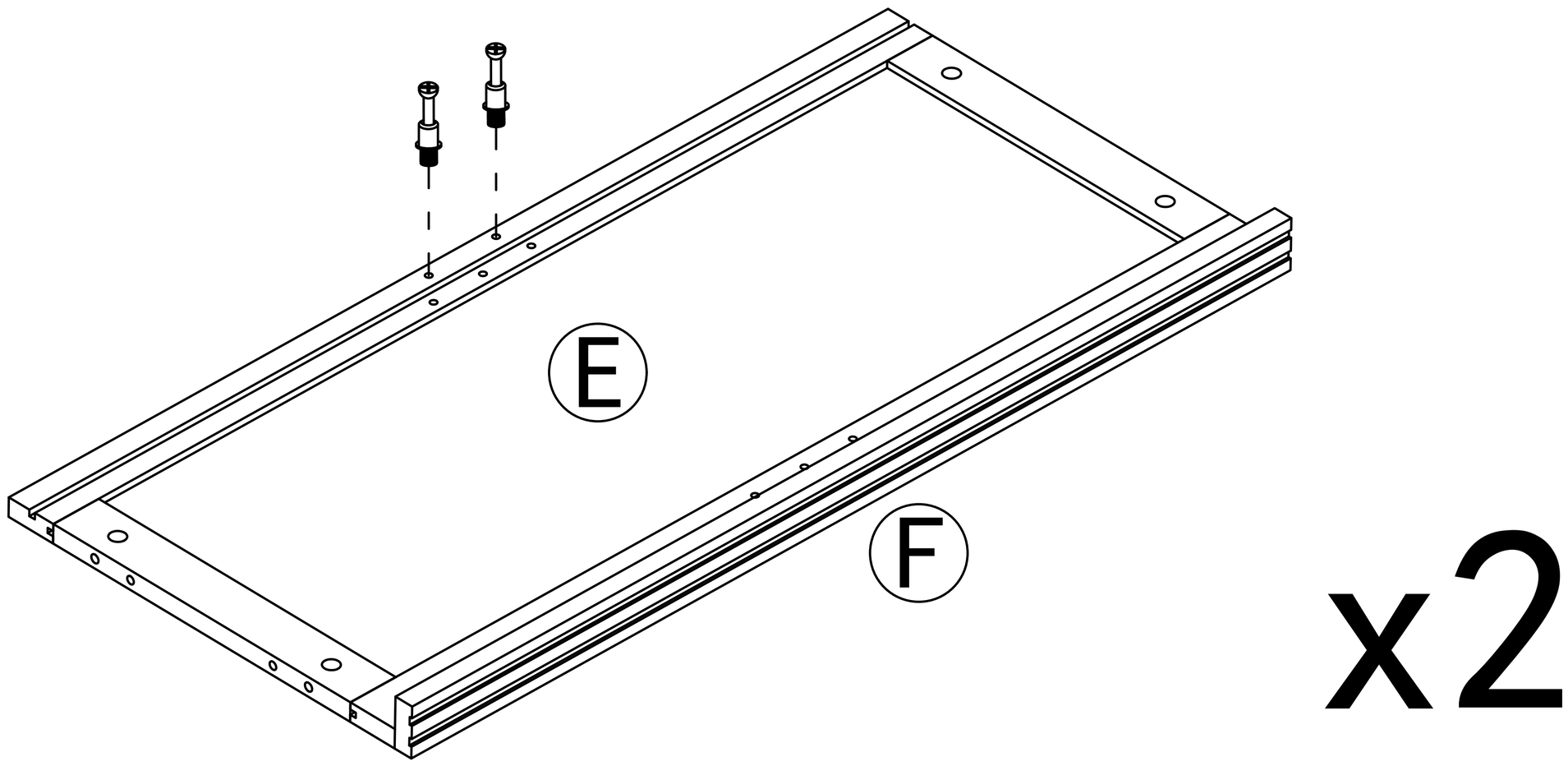

Step 11

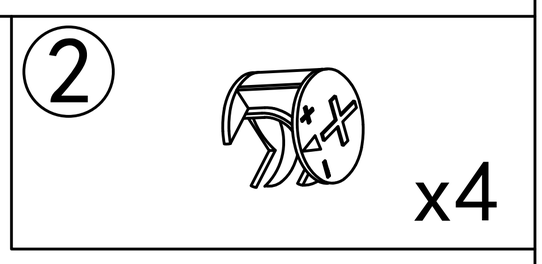

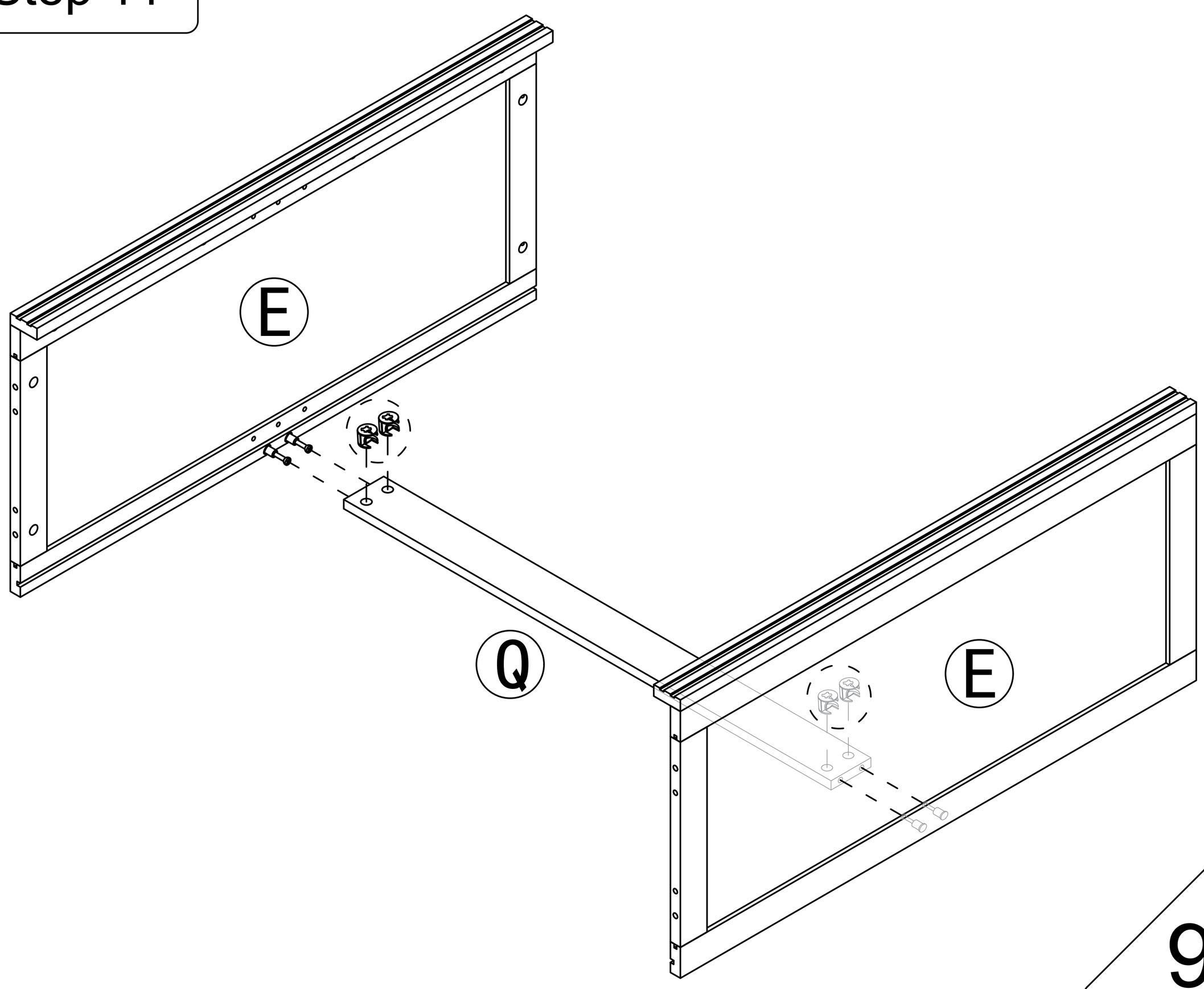

Step 12

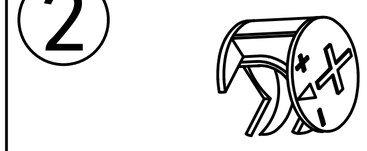

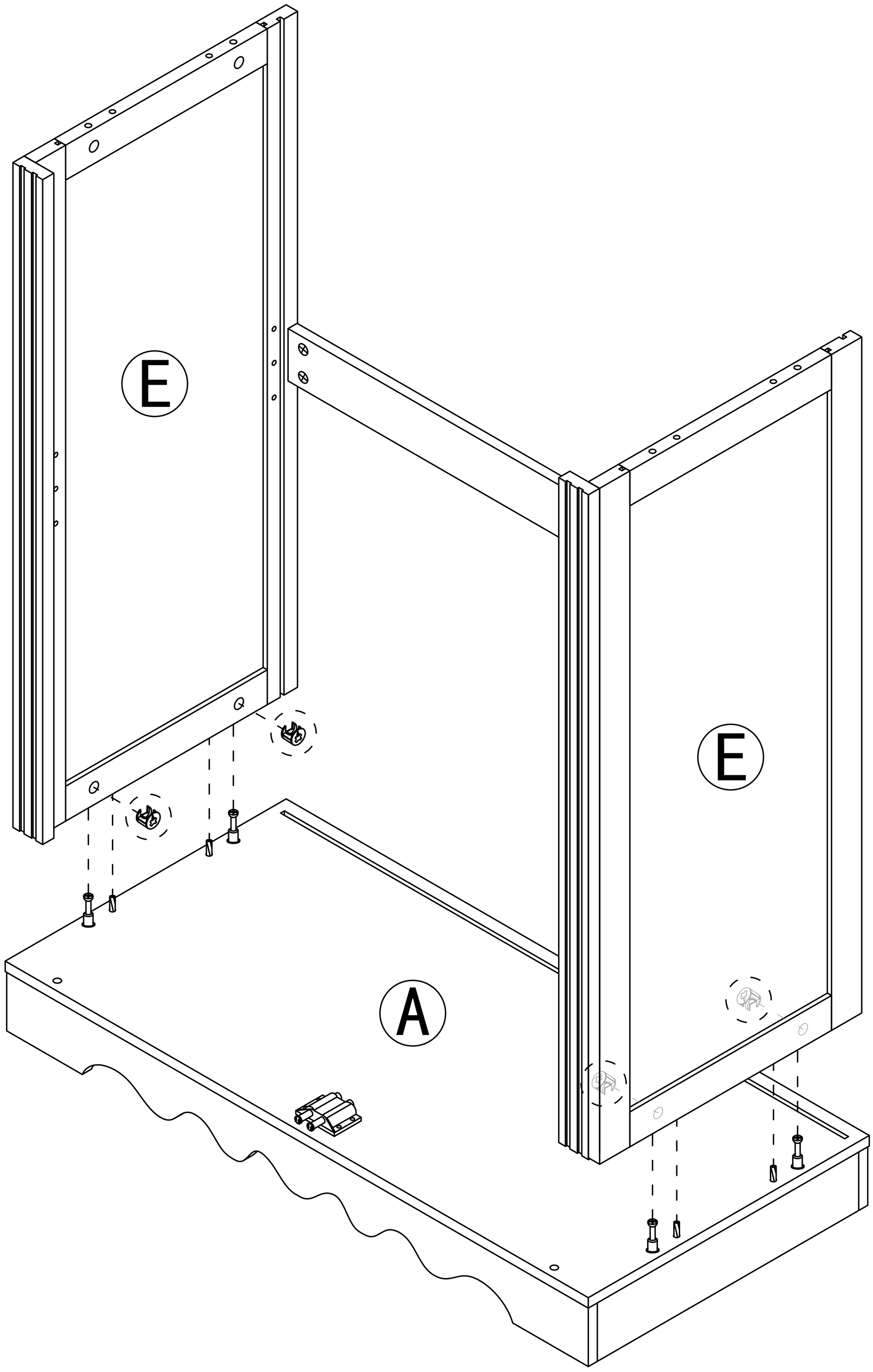

Step 13

Place the "J" board, Backboard card strip, and "J" board in order

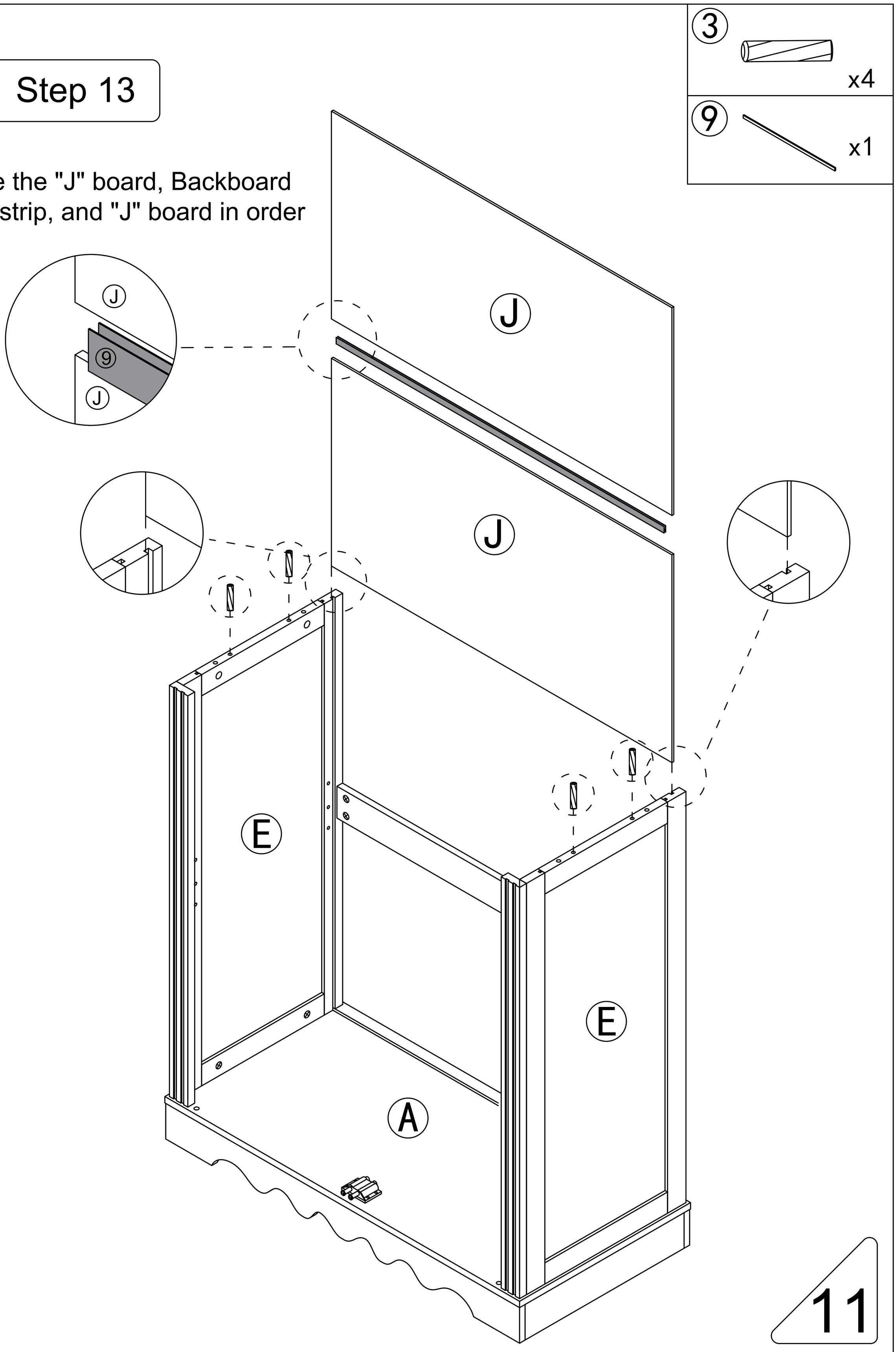

Step 14

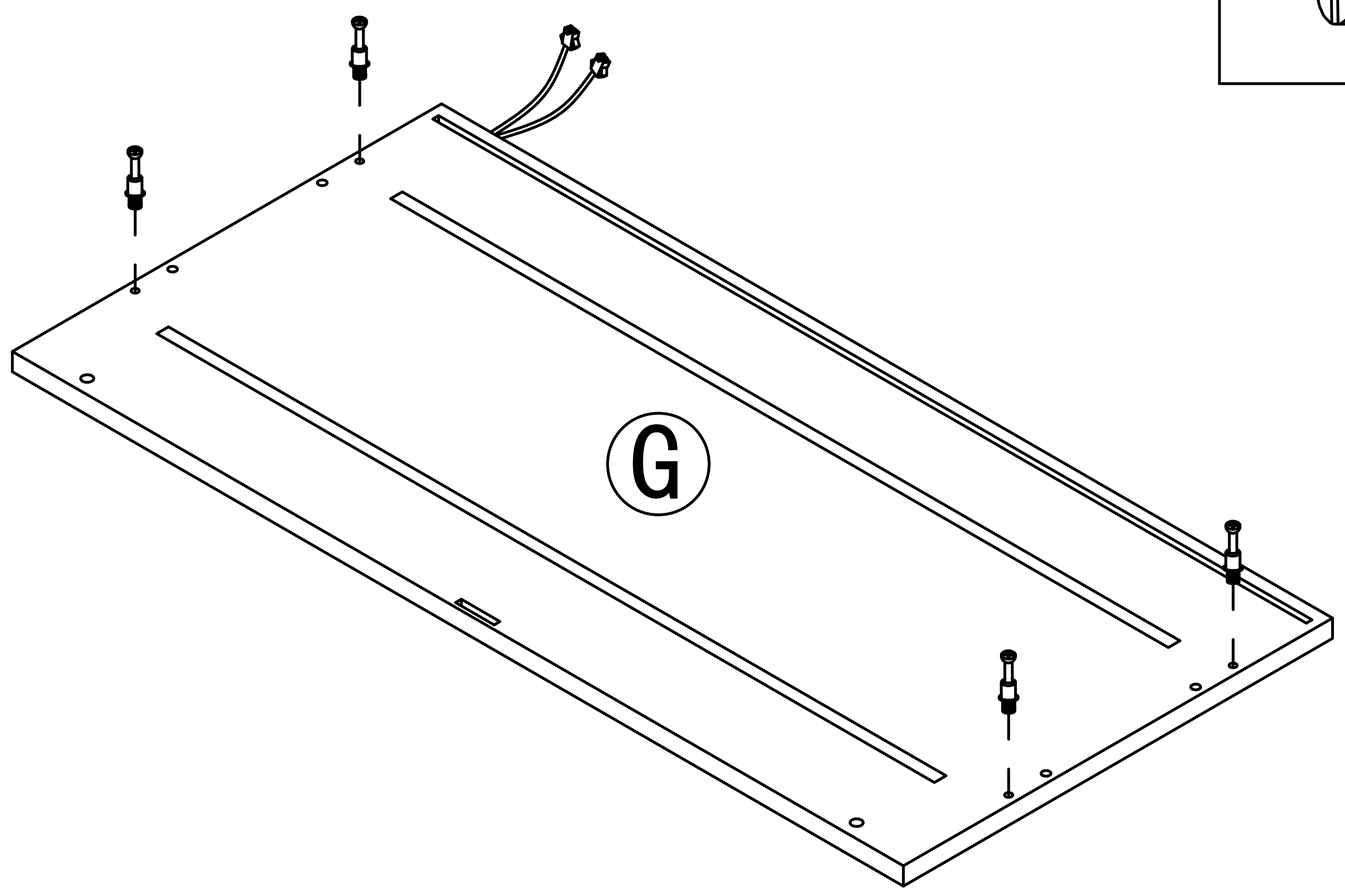

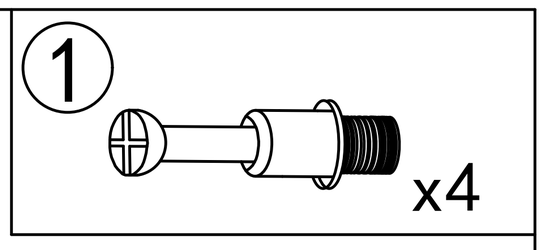

Step 15

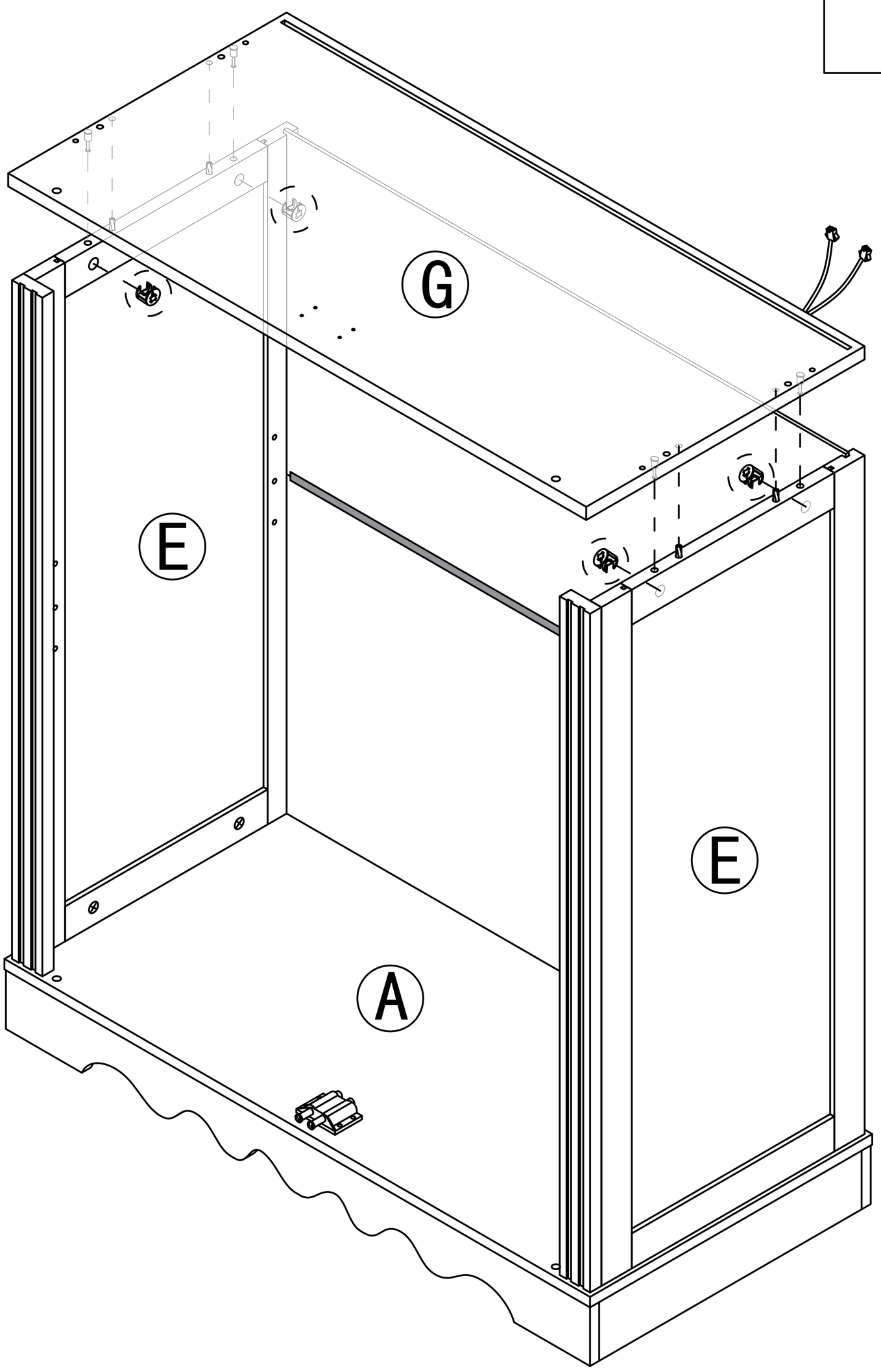

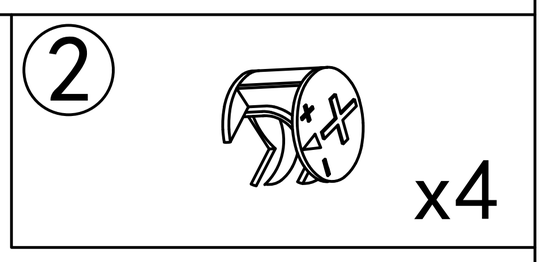

Step 16

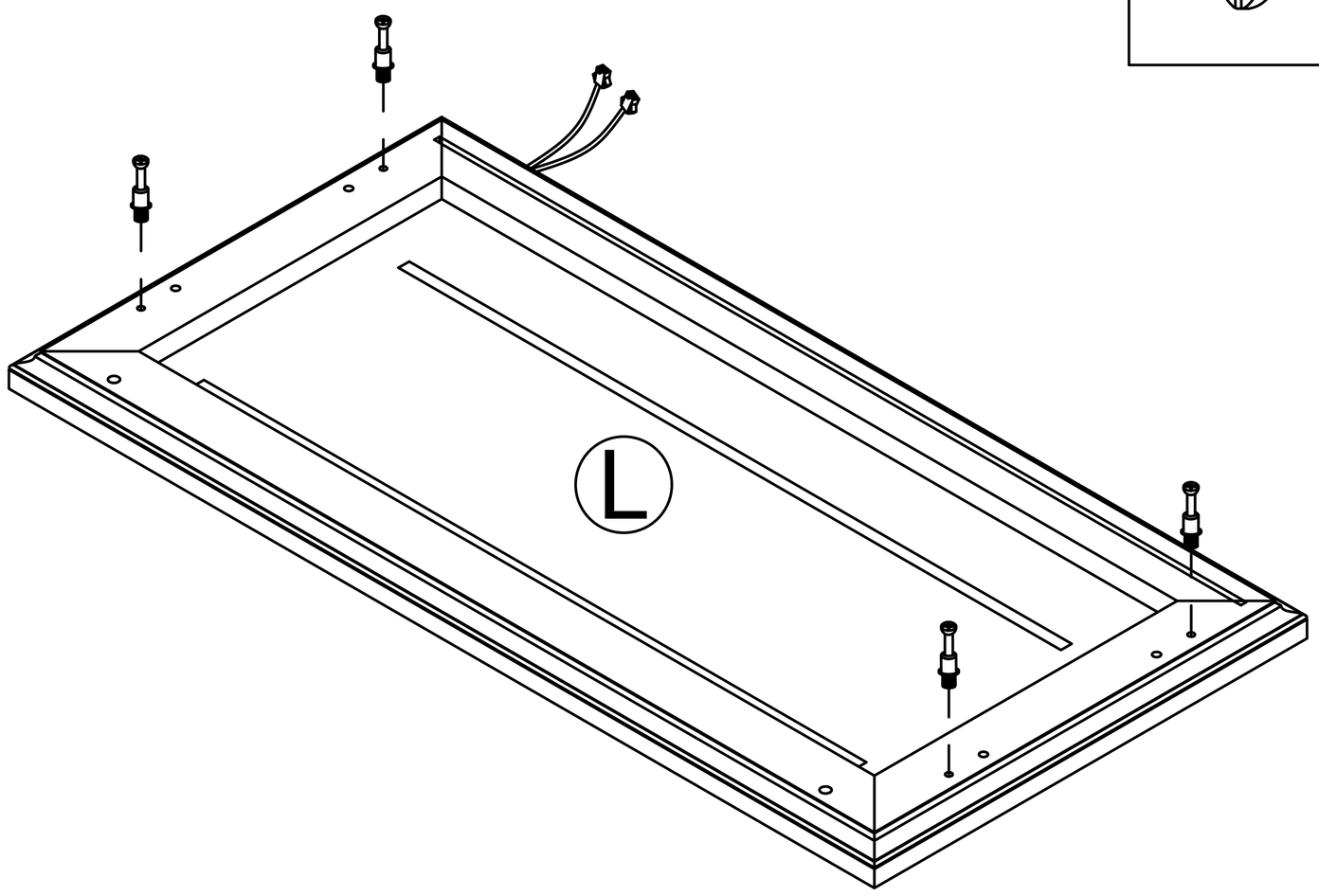

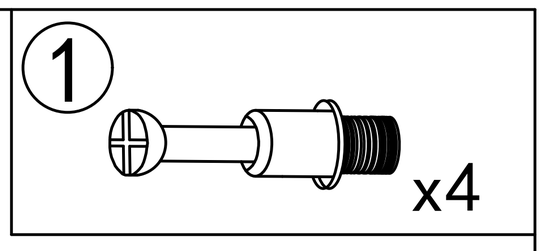

Step 17

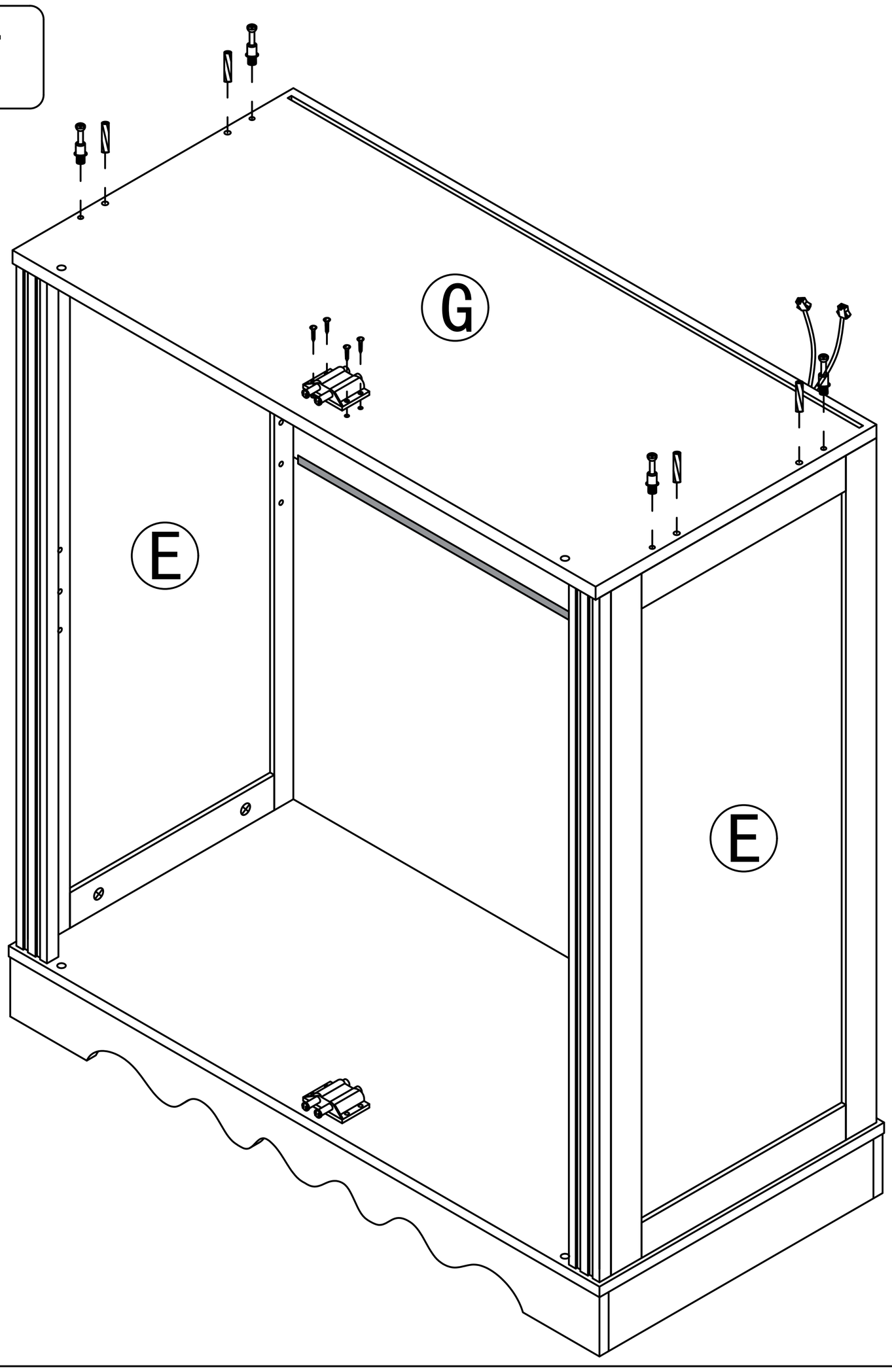

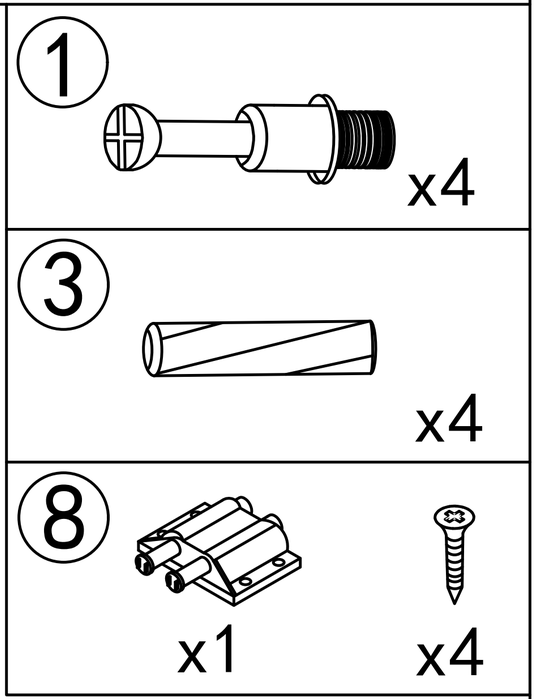

Step 18

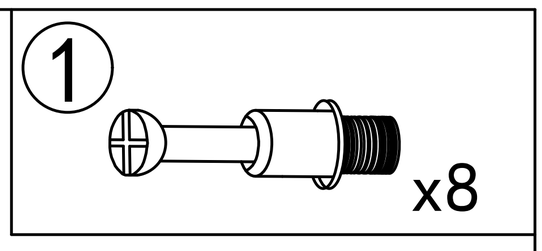

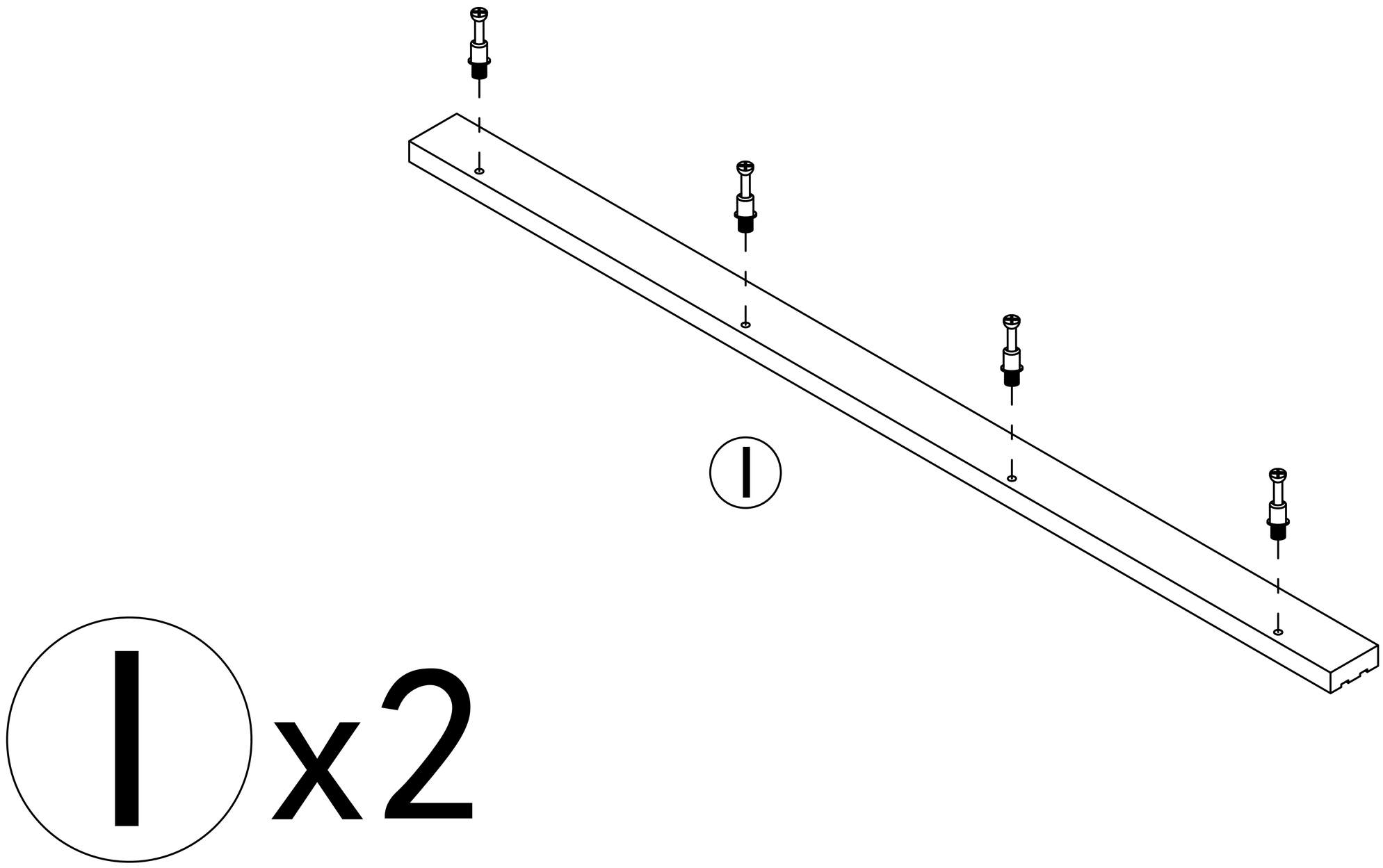

Step 19

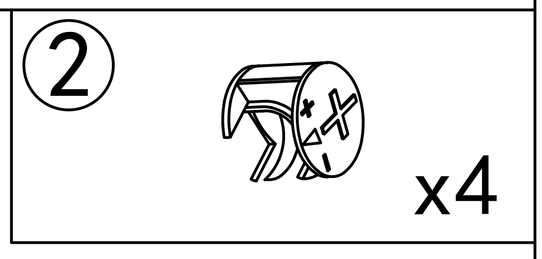

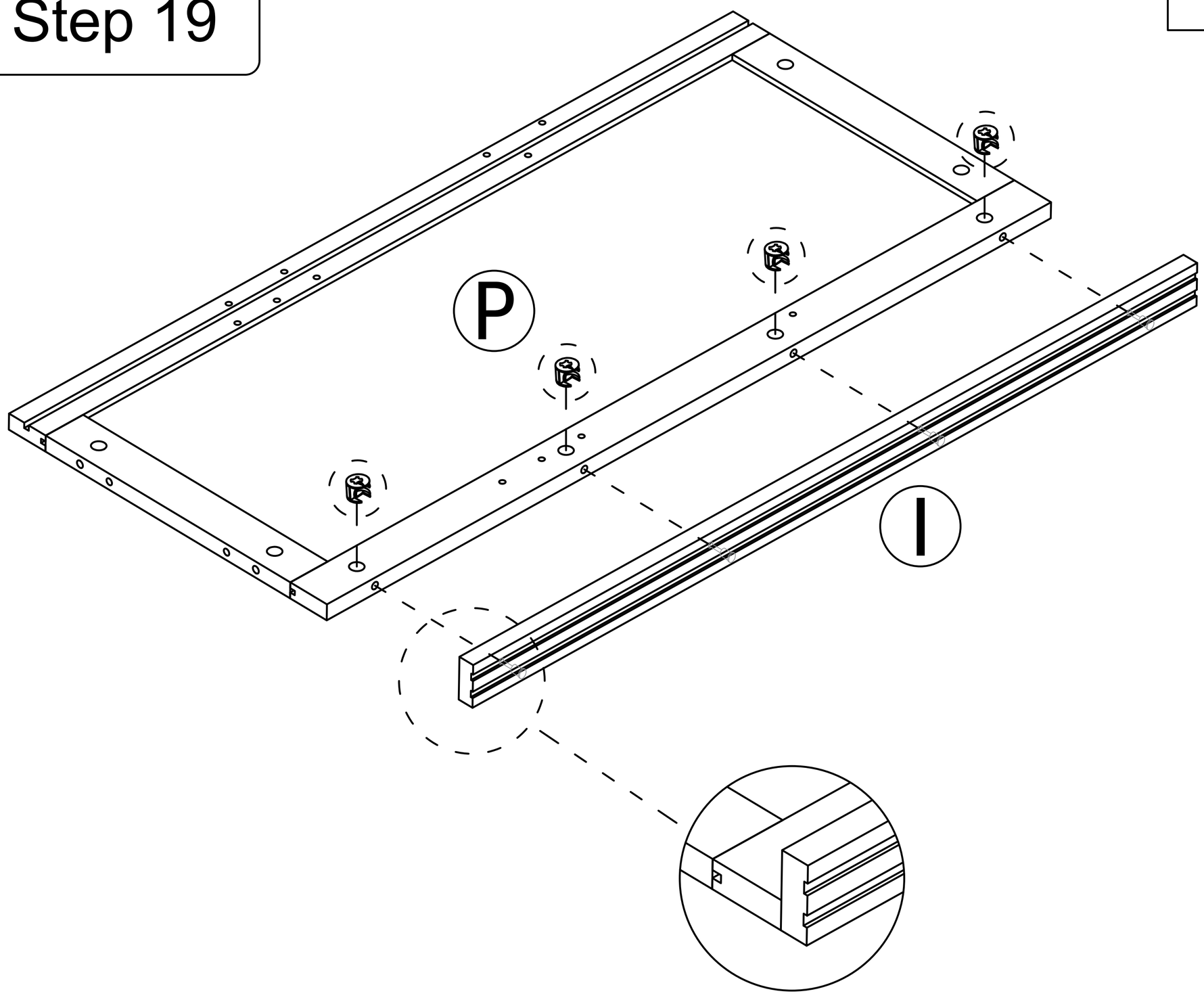

Step 20

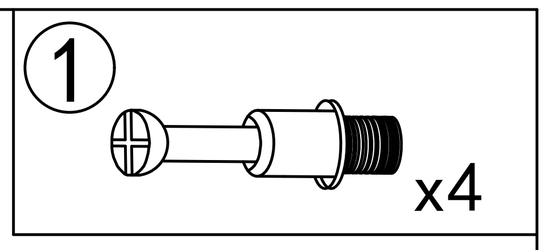

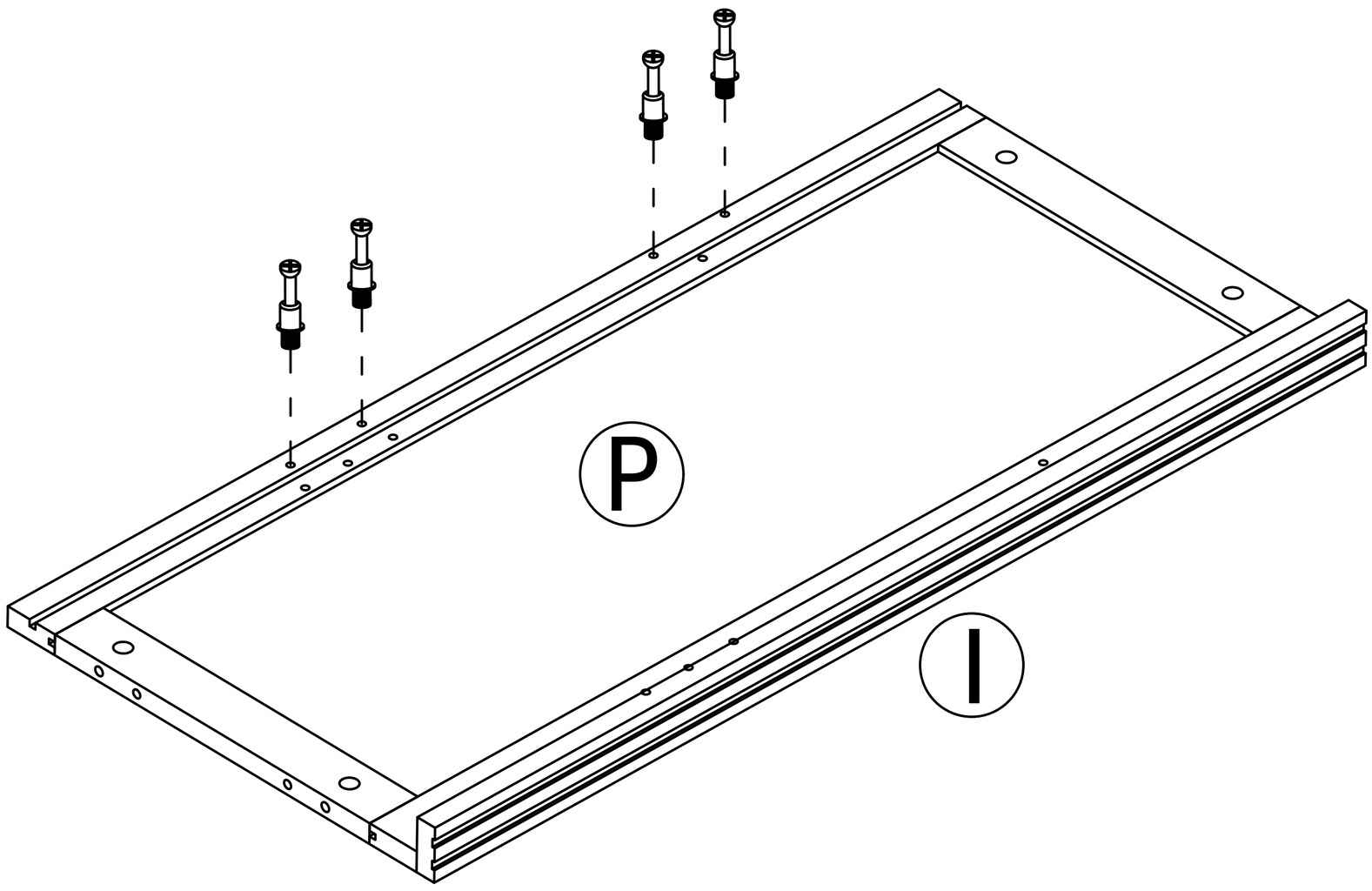

Step 21

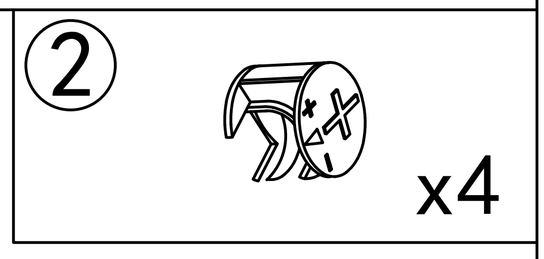

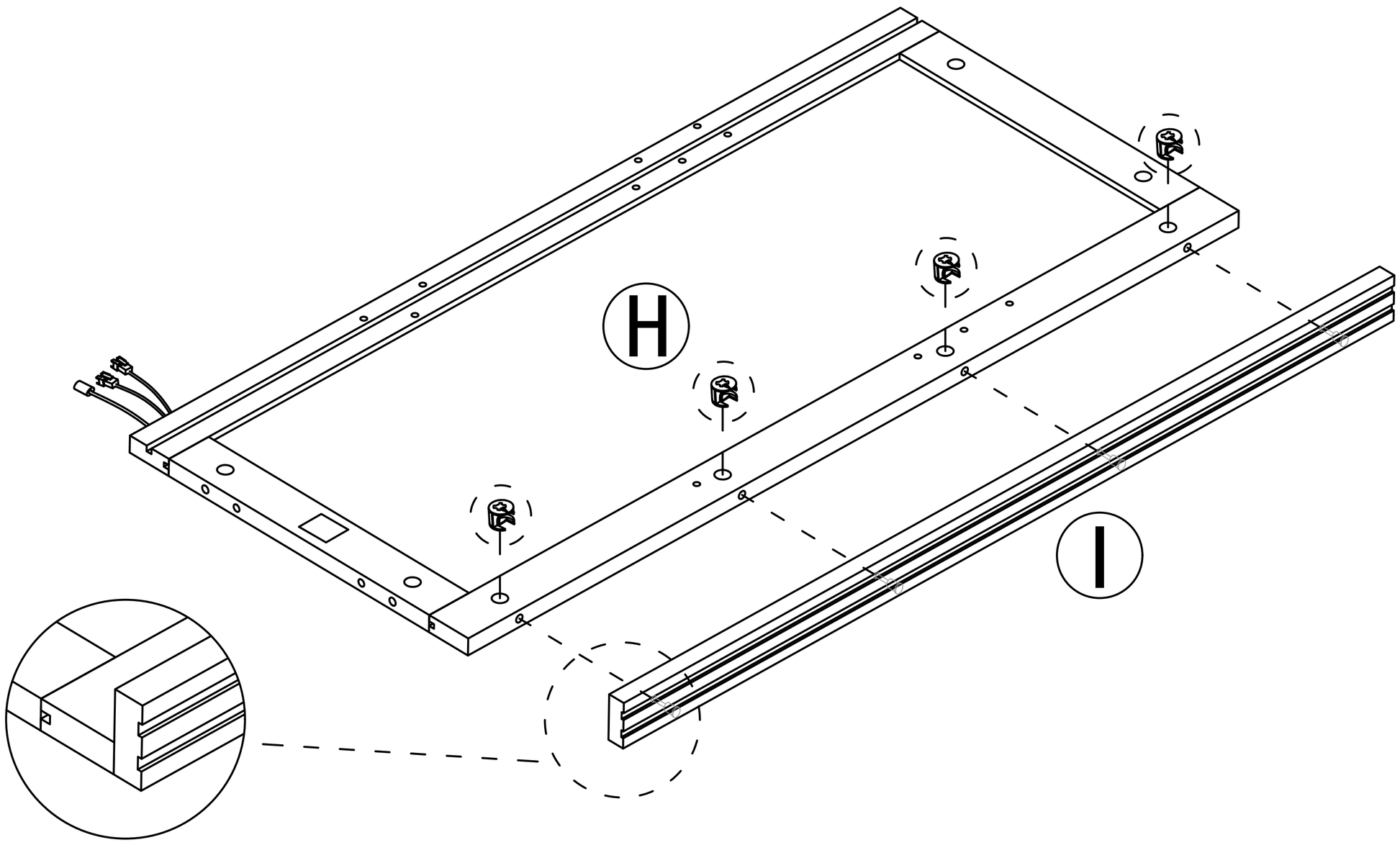

Step 22

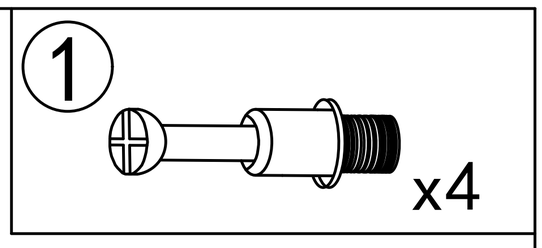

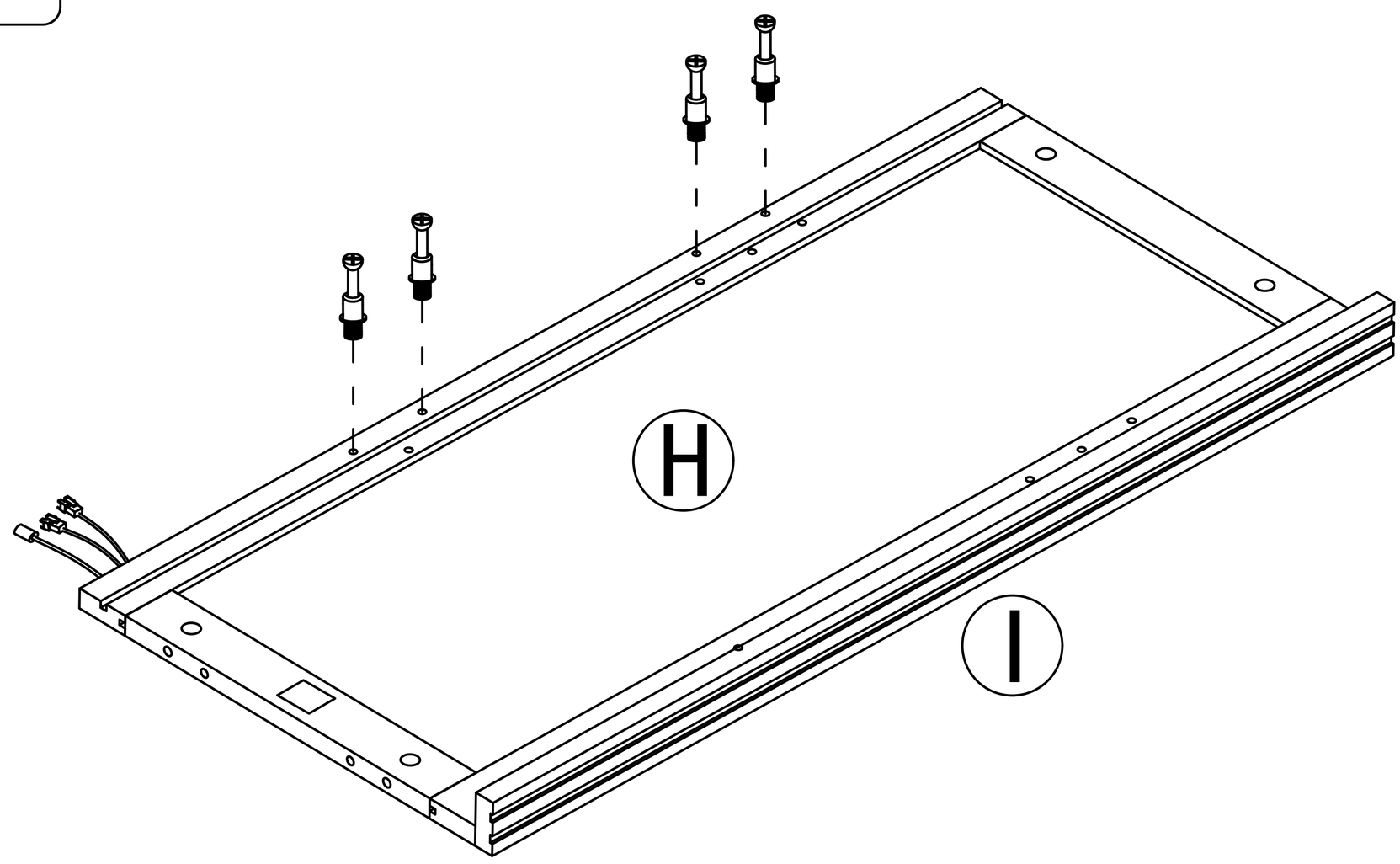

Step 23

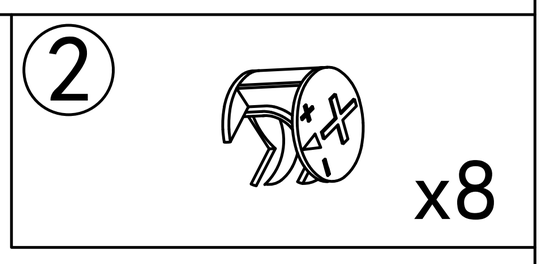

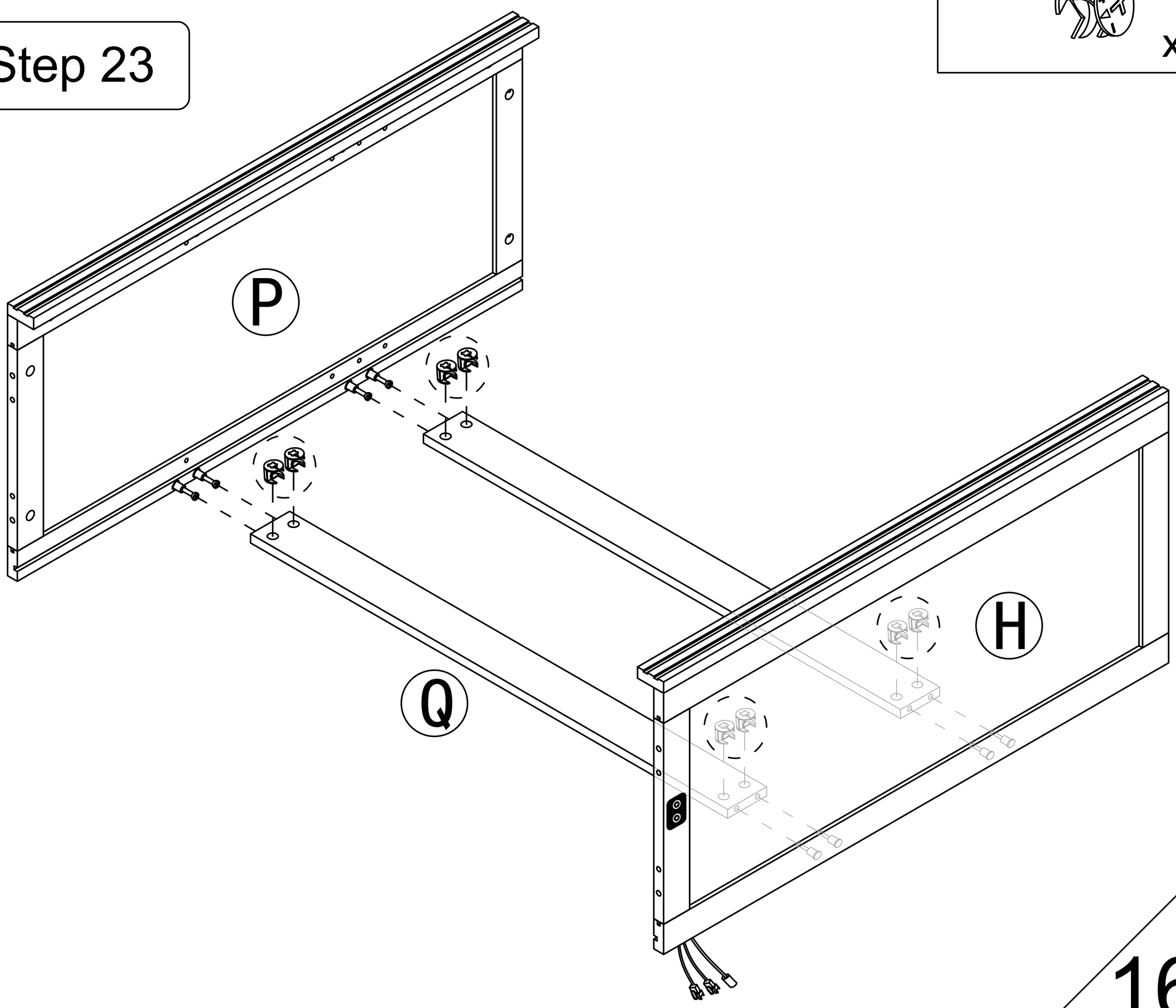

Step 24

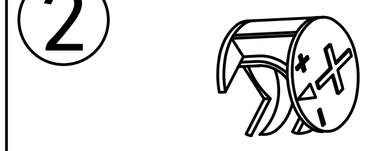

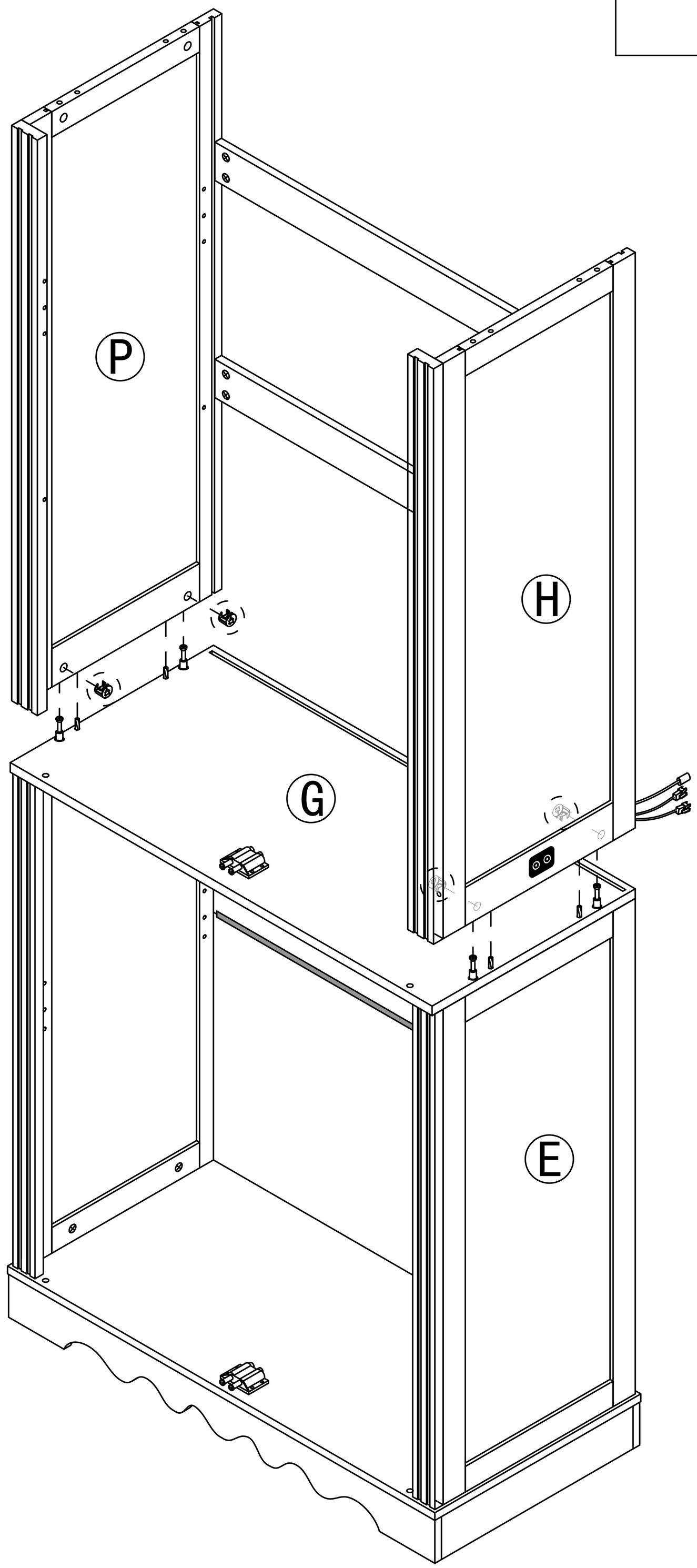

It is recommended that two people work together to install the structural wood panels.

Step 25

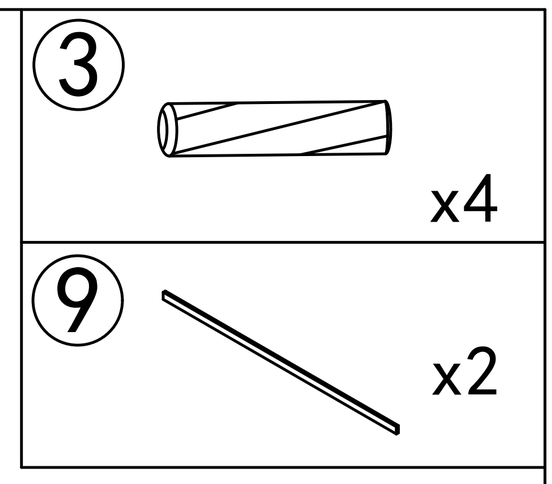

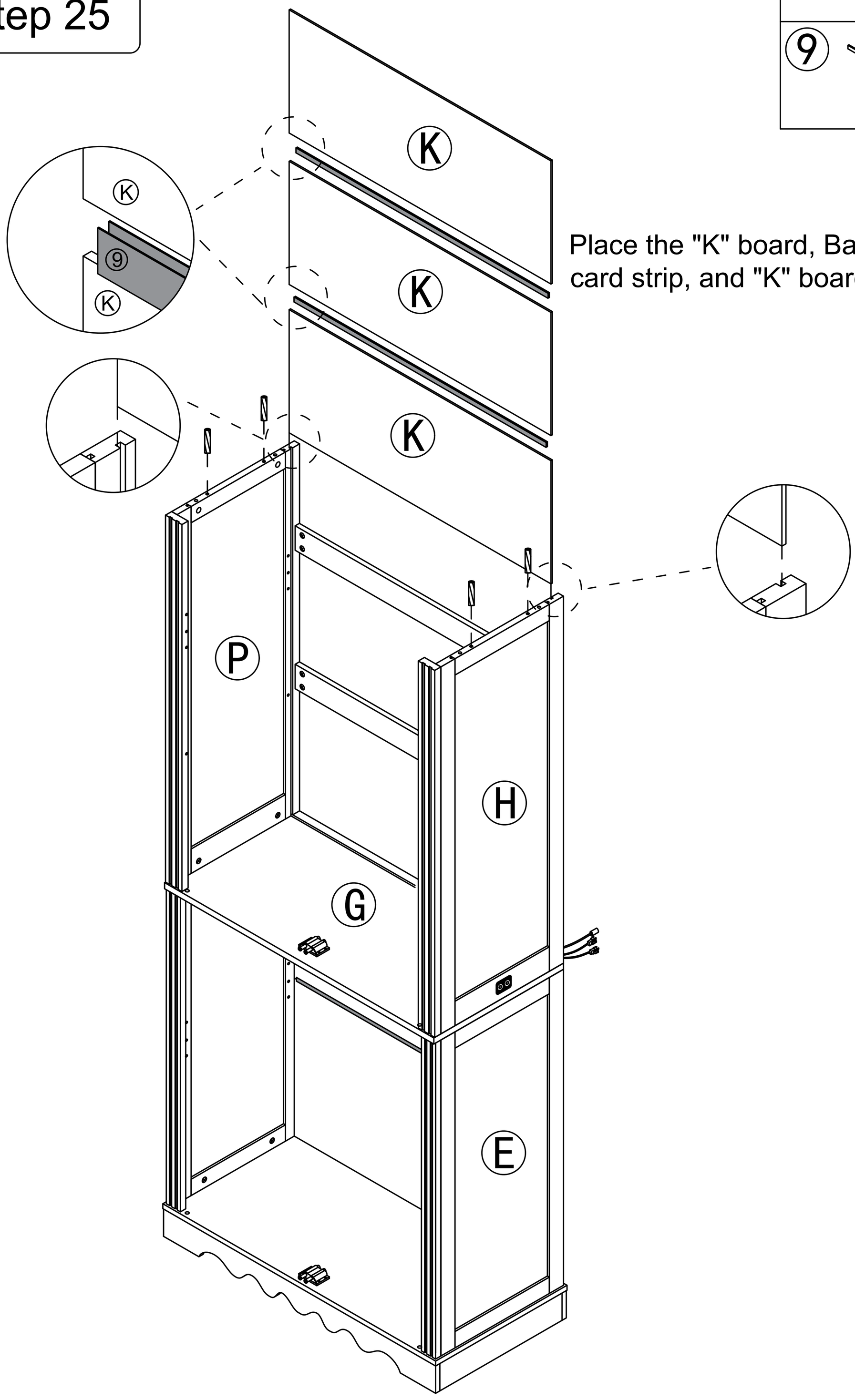

Place the "K" board, Backboard card strip, and "K" board in order

It is recommended that two people work together to install the structural wood panels.

Step 26

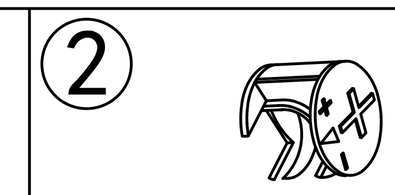

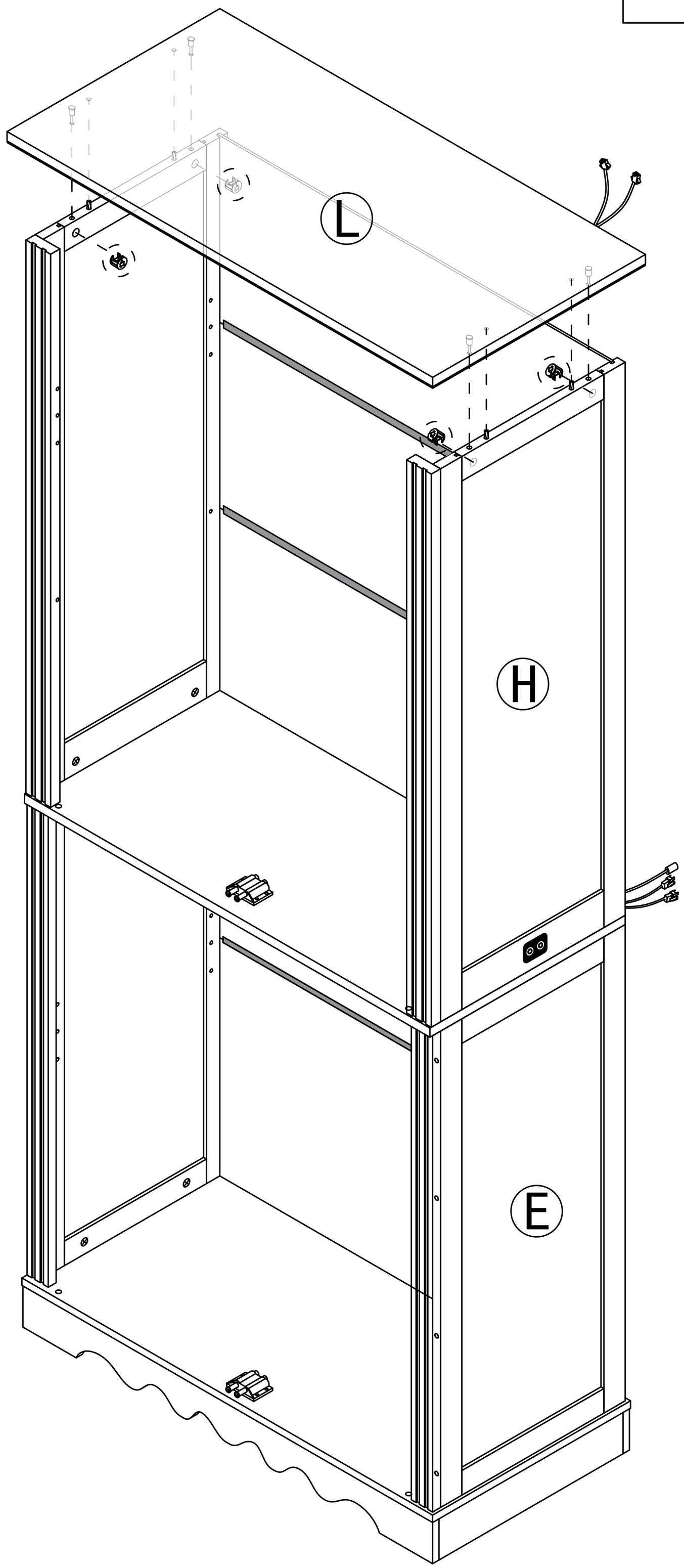

Step 27

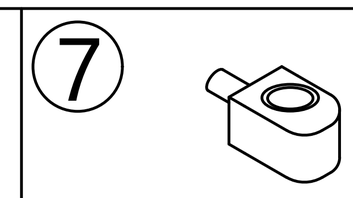

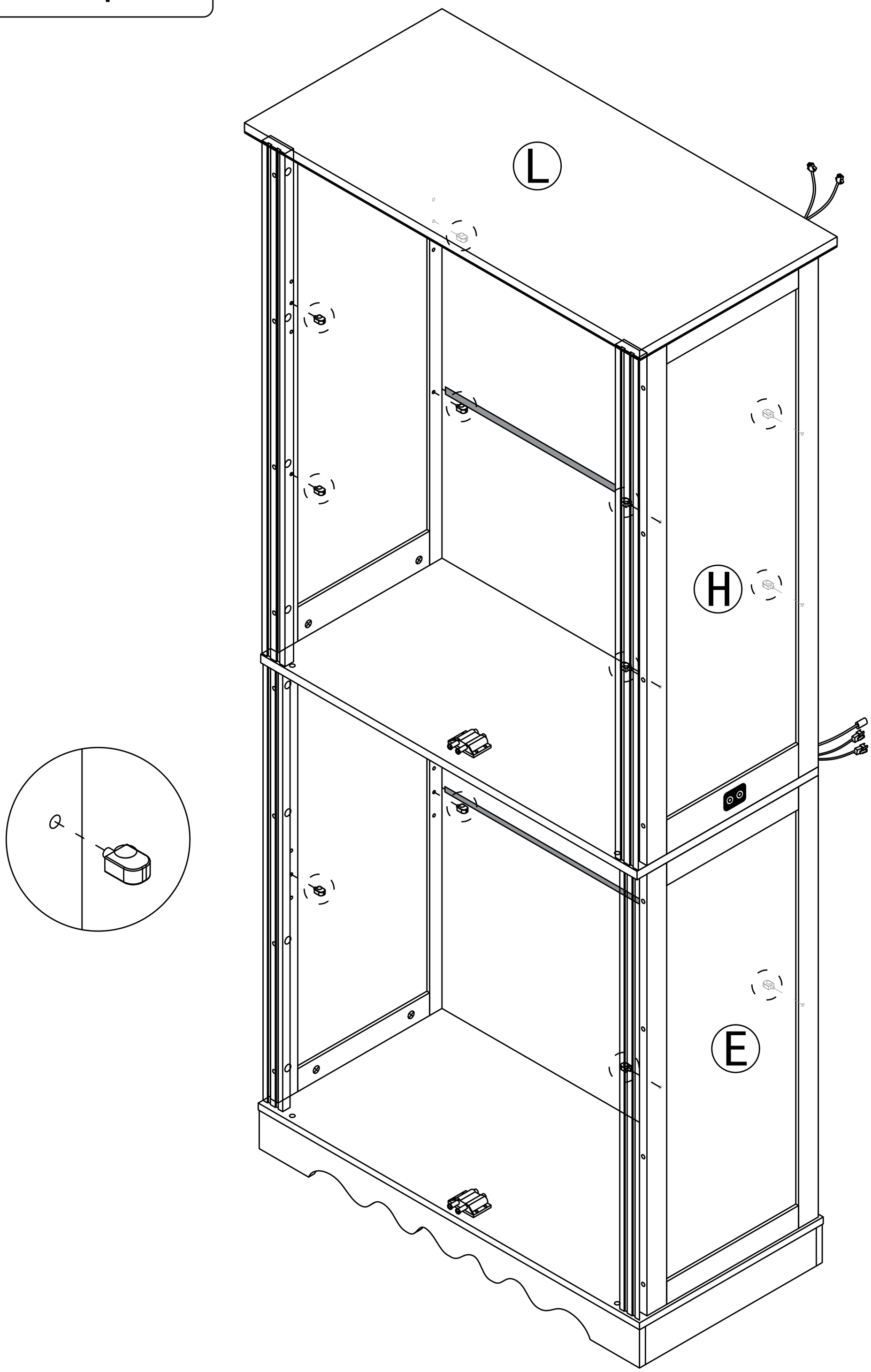

Step 28

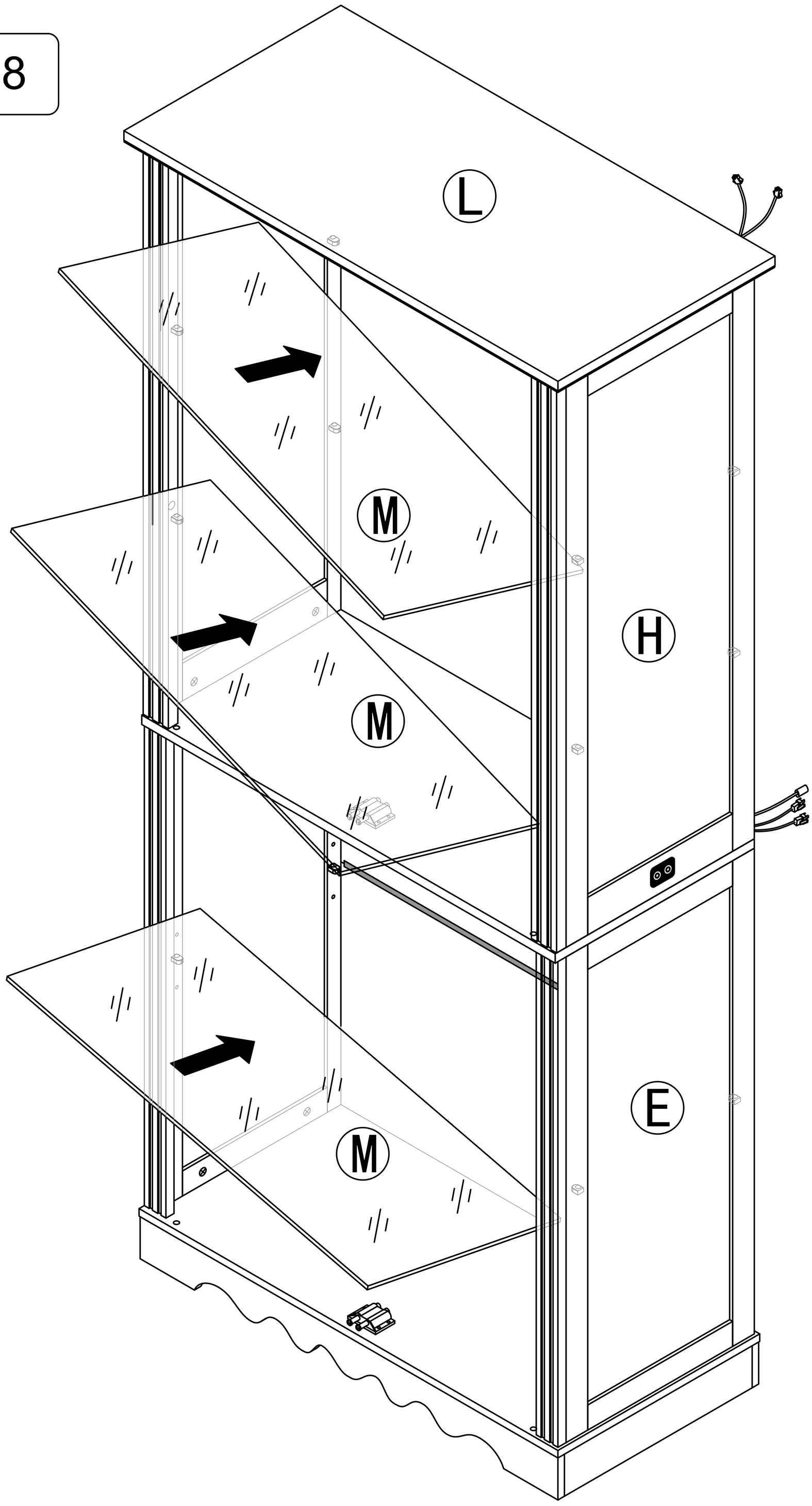

When installing the glass shelf, be sure to insert it into the cabinet at an angle.
Please handle the glass with care and place it gently.

Step 29

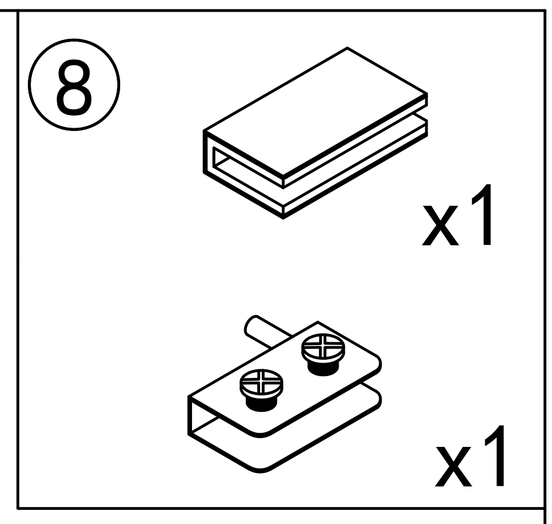

First, completely unscrew the screws on the parts

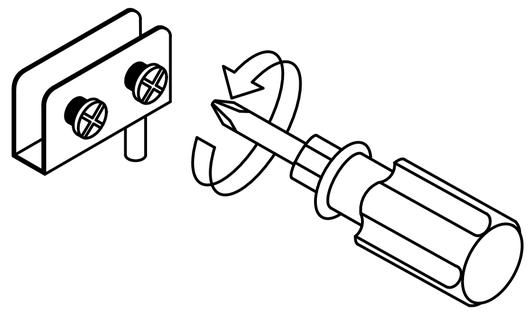

Then take out the black rubber pad from the inside of the part, and the white sponge remains unchanged inside the part.

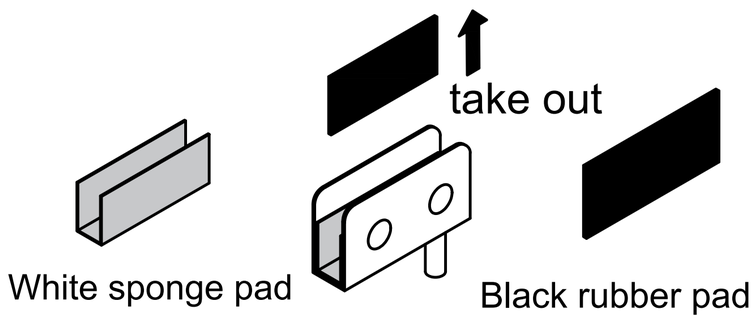

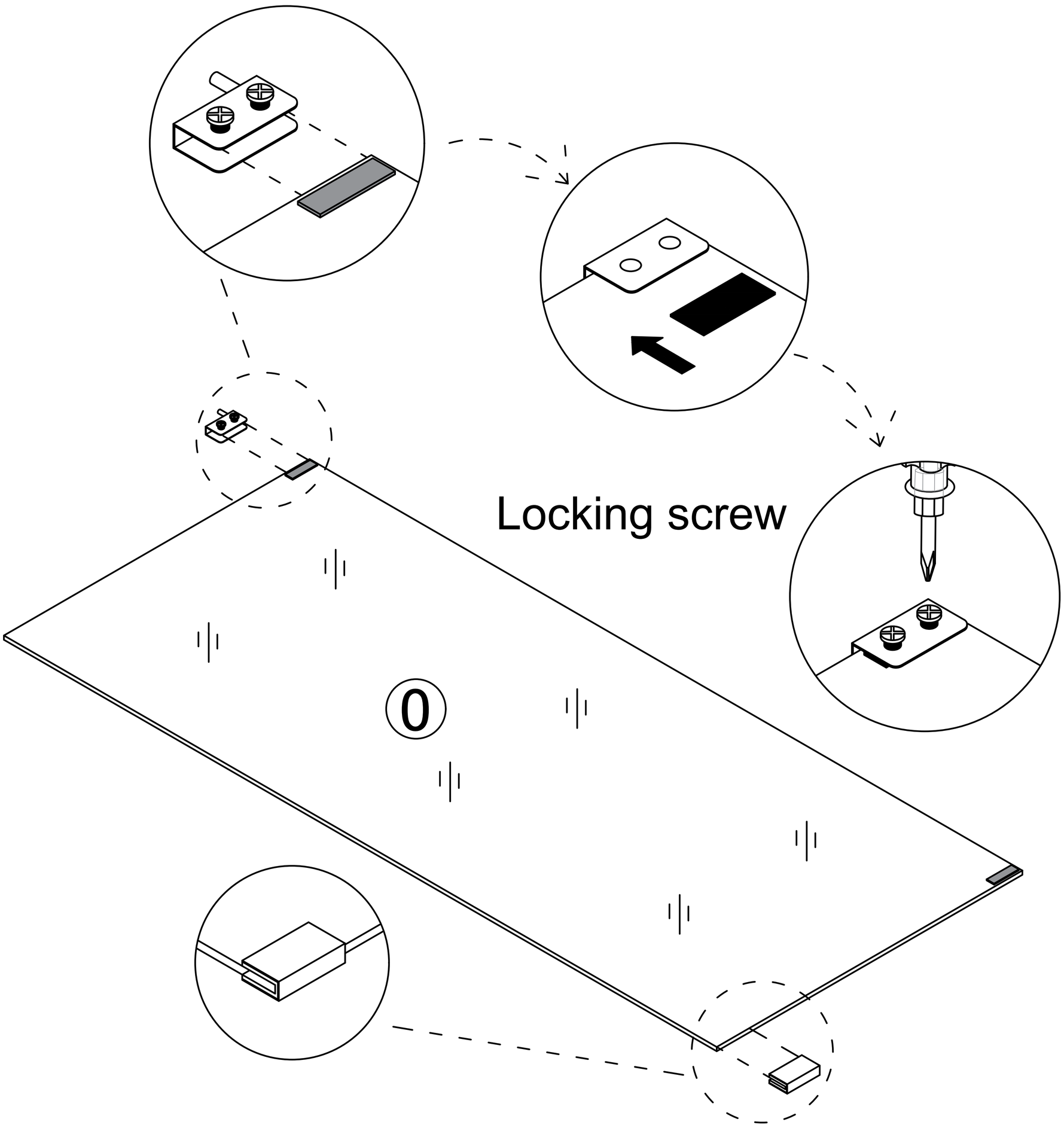

Pay attention to the direction of the door hinge, rotate the screws to compress the black gasket, and do not place it in the opposite direction

Place the black gasket on the side where the screws are installed

Step 30

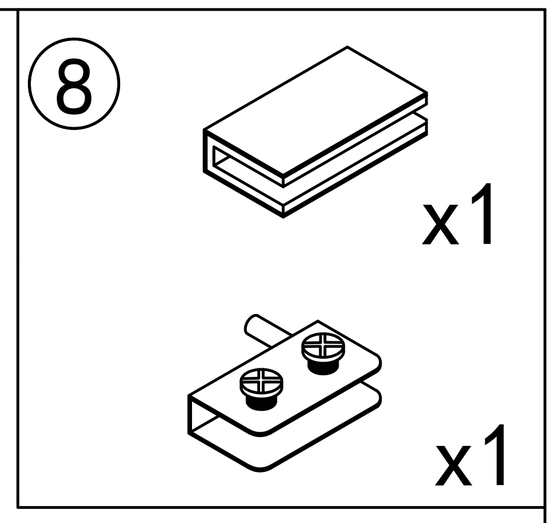

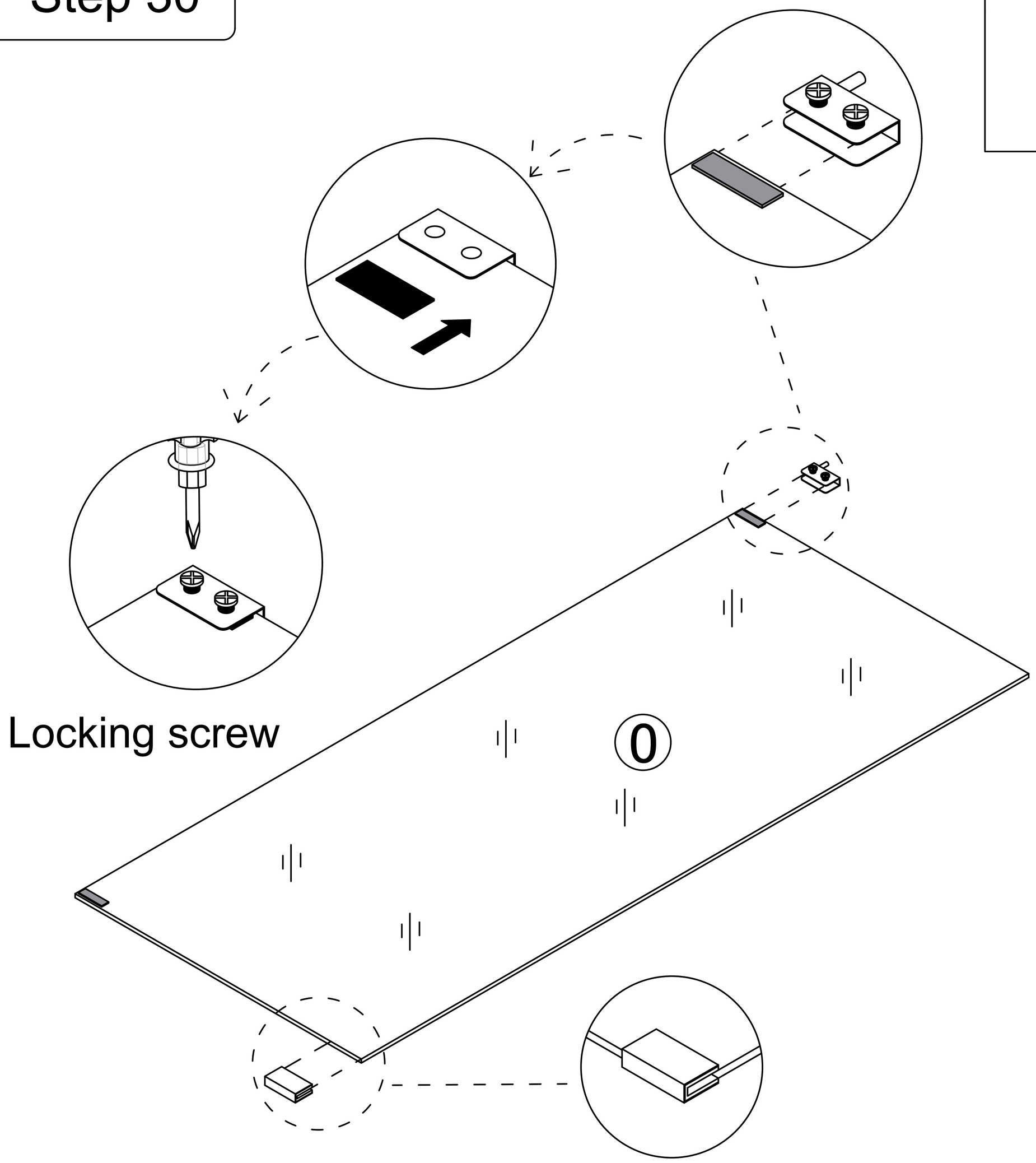

Pay attention to the direction of the door hinge, rotate the screws to compress the black gasket, and do not place it in the opposite direction

Place the black gasket on the side where the screws are installed

Step 31

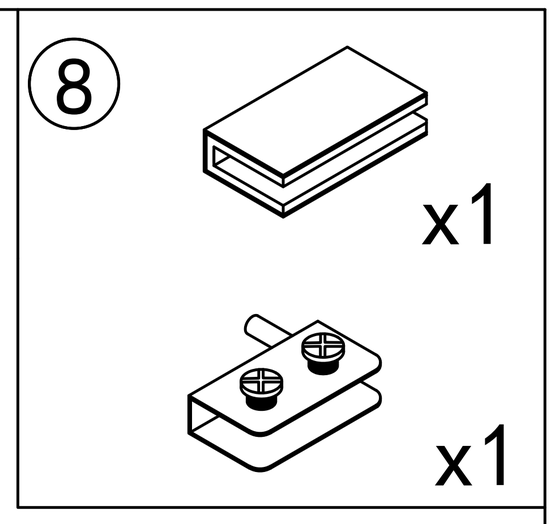

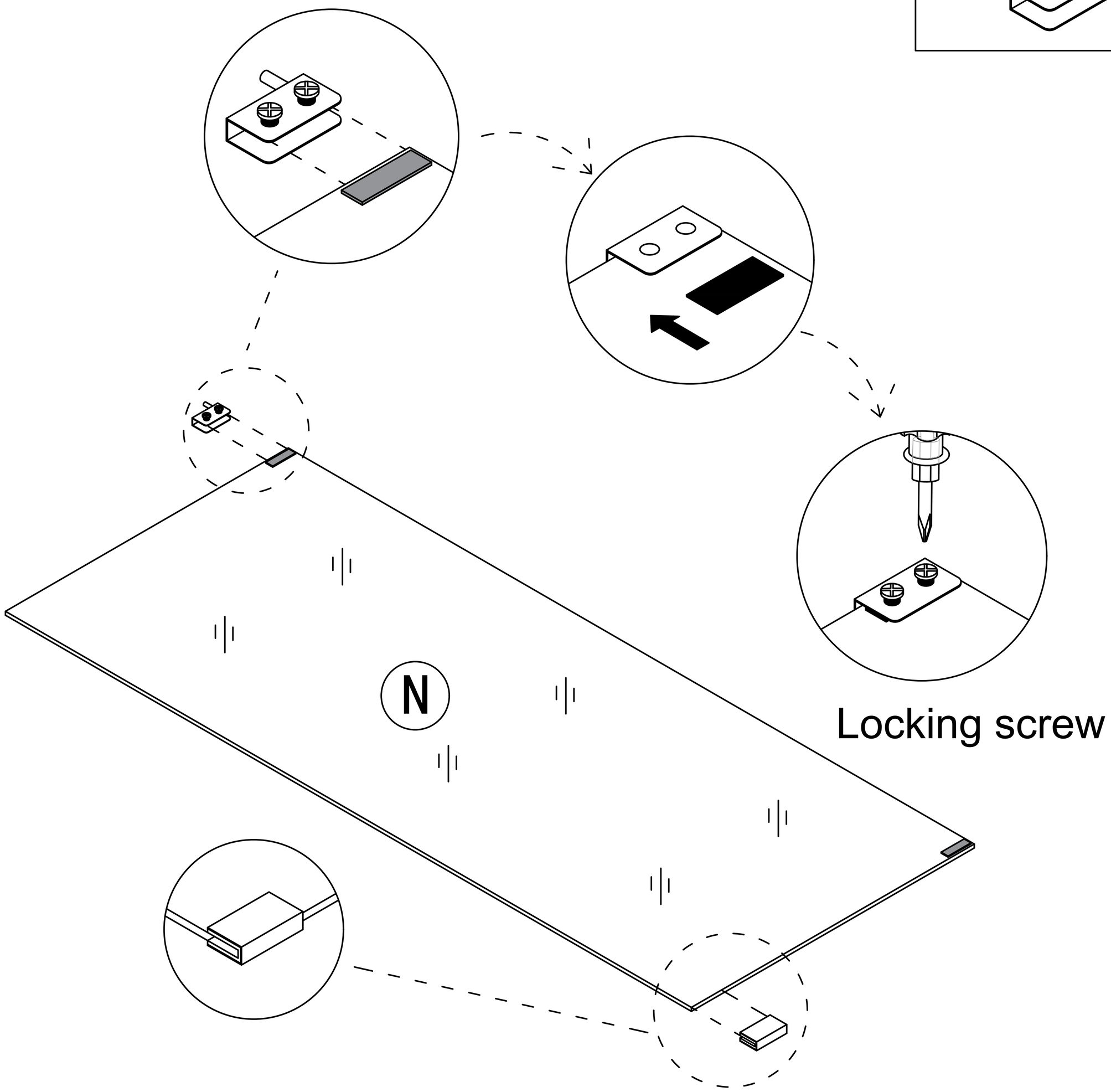

Pay attention to the direction of the door hinge,
rotate the screws to compress the black gasket,
and do not place it in the opposite direction

Place the black gasket on the side
where the screws are installed

Step 32

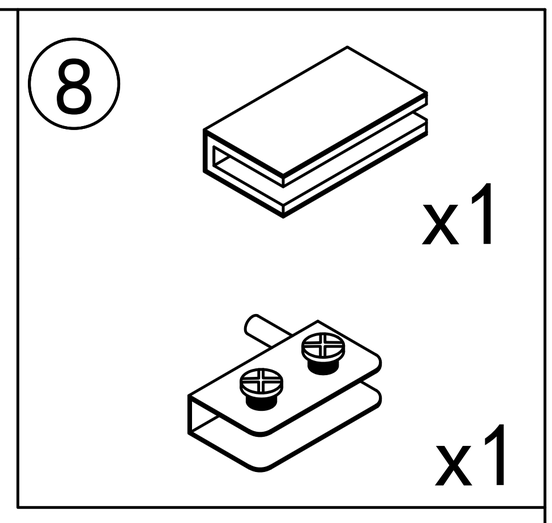

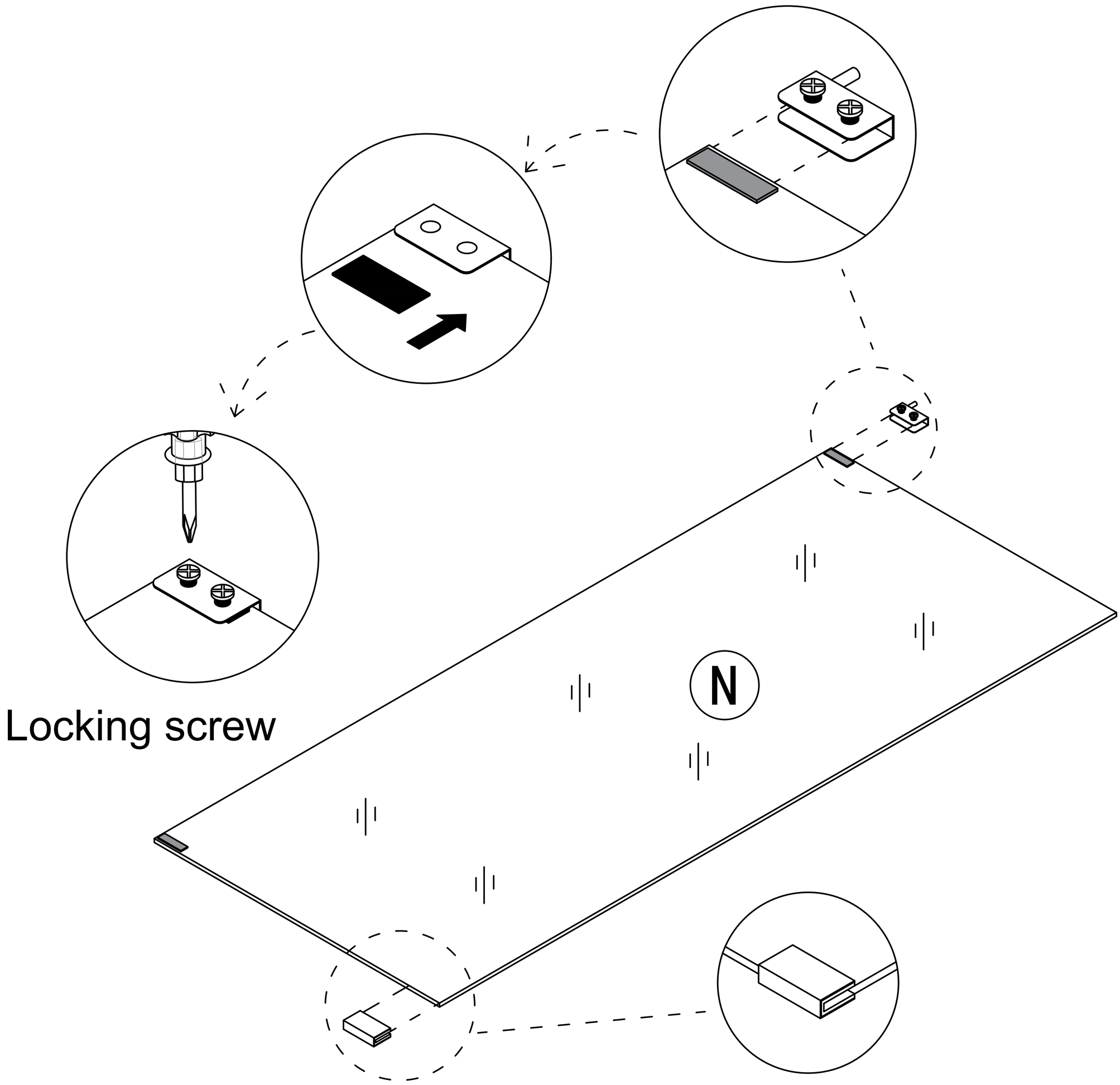

Pay attention to the direction of the door hinge,
rotate the screws to compress the black gasket,
and do not place it in the opposite direction

Place the black gasket on the side
where the screws are installed

Step 33

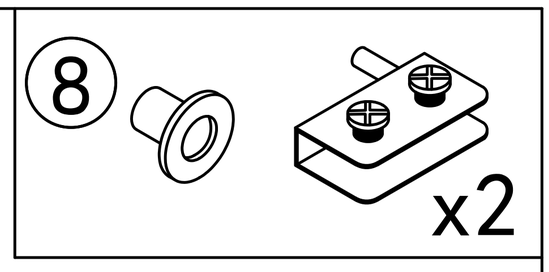

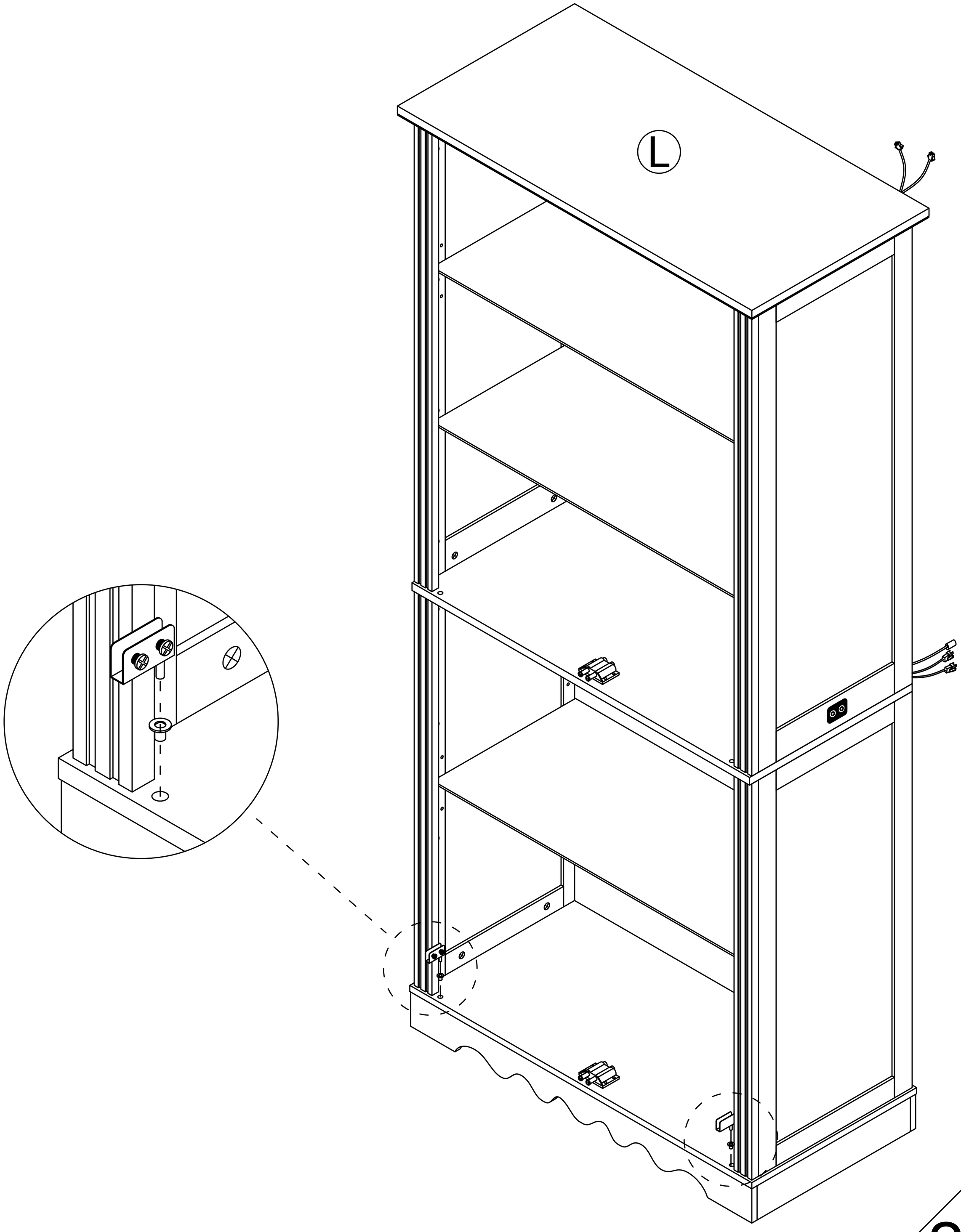

Step 34

Pay attention to the direction of the door hinge during installation

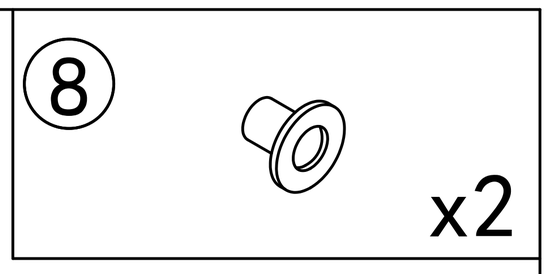

When installing a glass door, it is recommended to have two people install it to avoid the glass door colliding or hitting oneself.

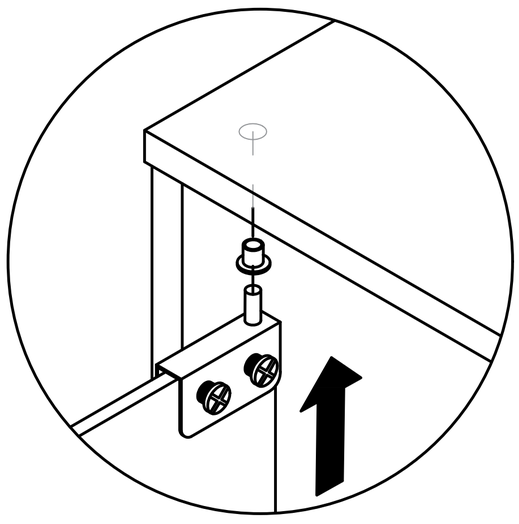

first

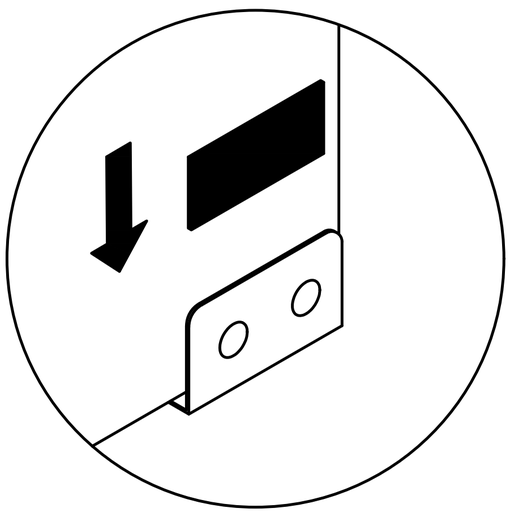

second

After installing the glass door, place the black gasket on the side where the screws are installed

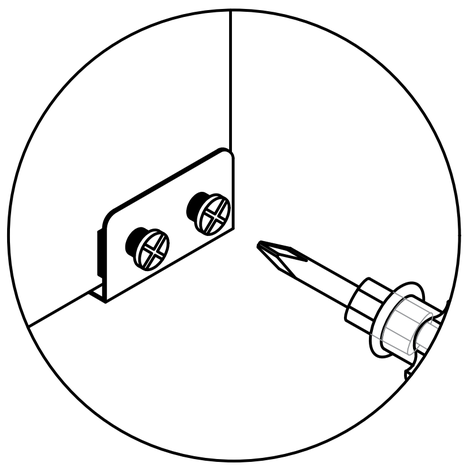

third

Locking screw

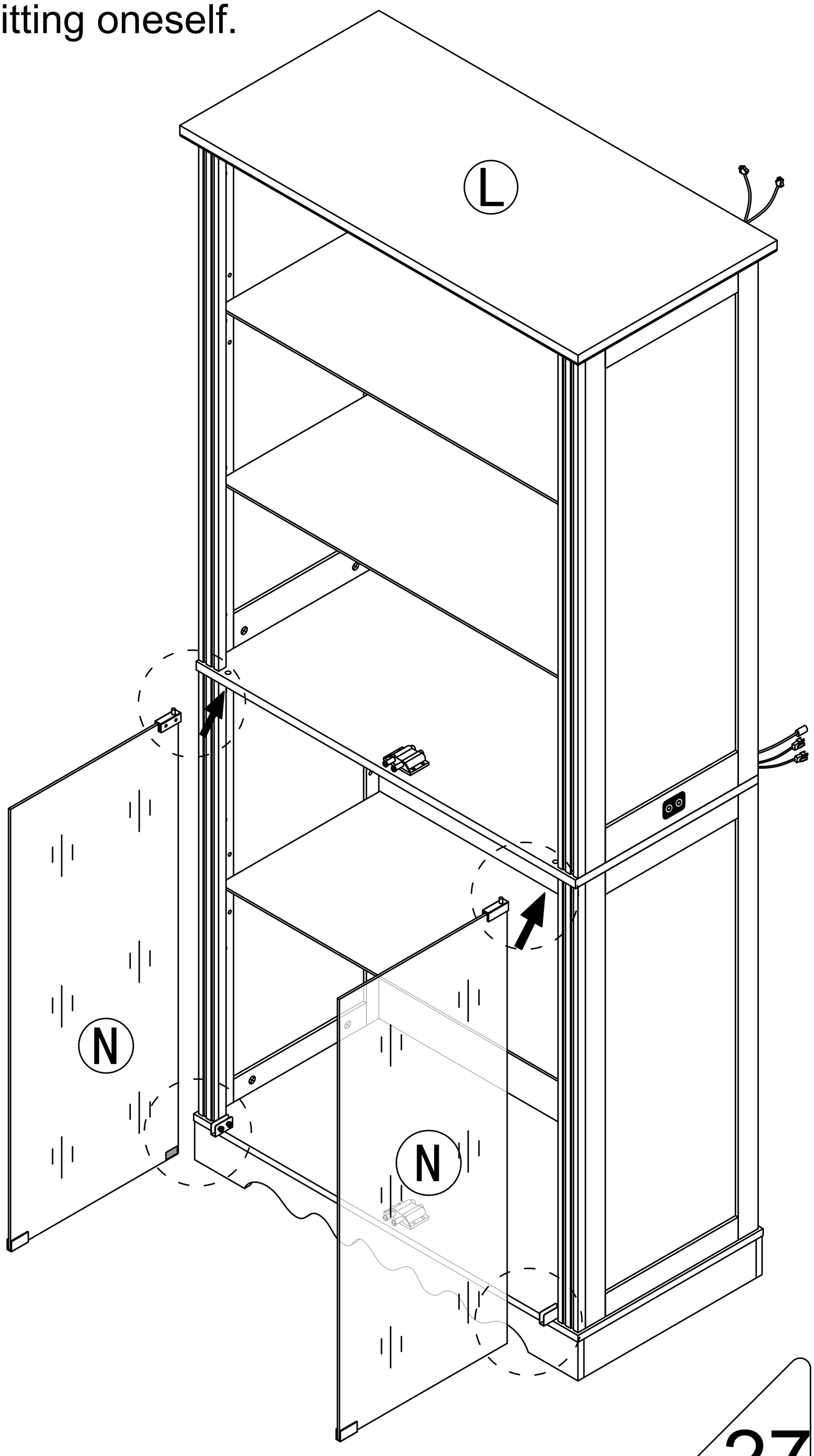

Tip: Turning the door lock to the right will close it

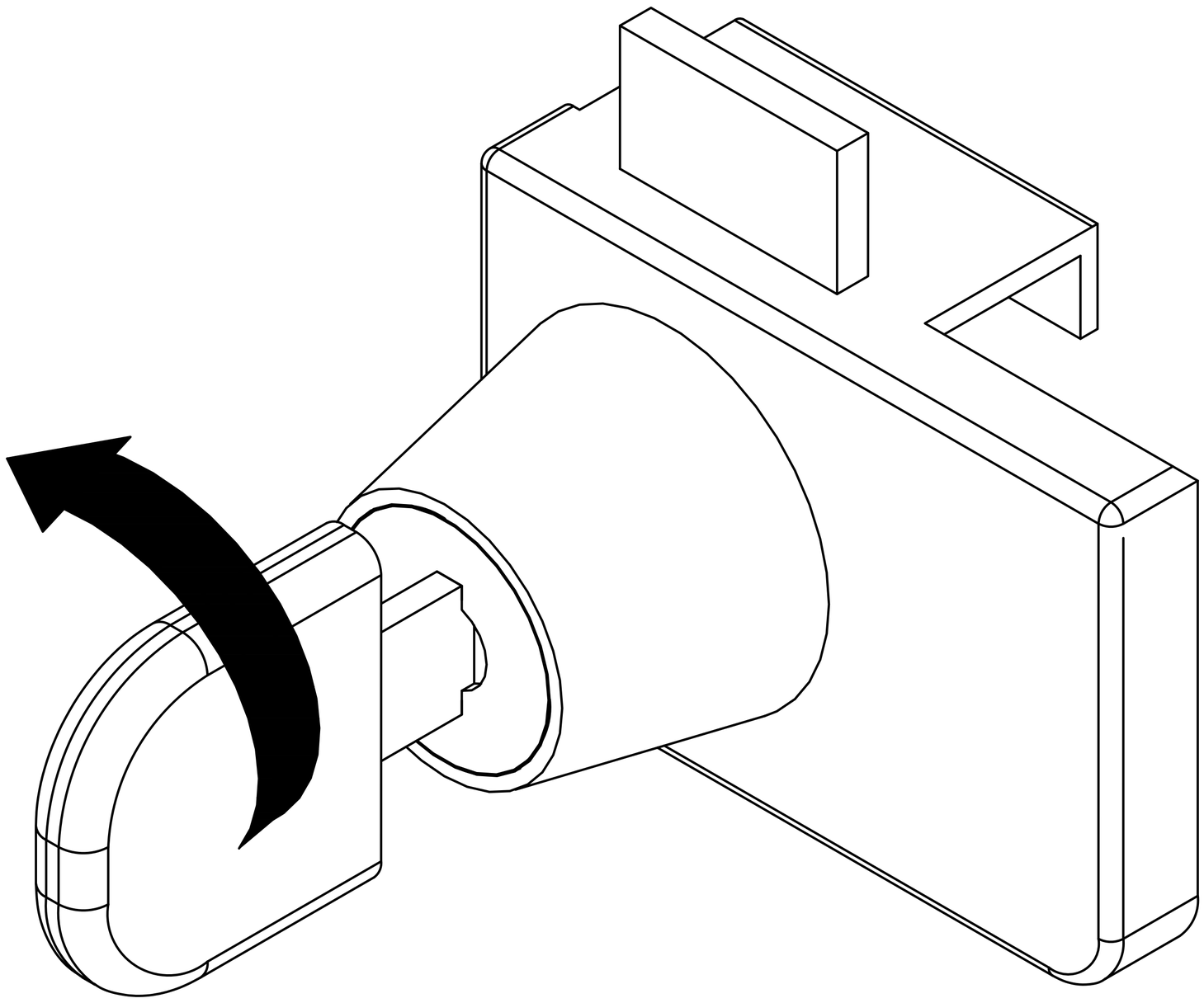

Tip: Turning the door lock to the left opens it

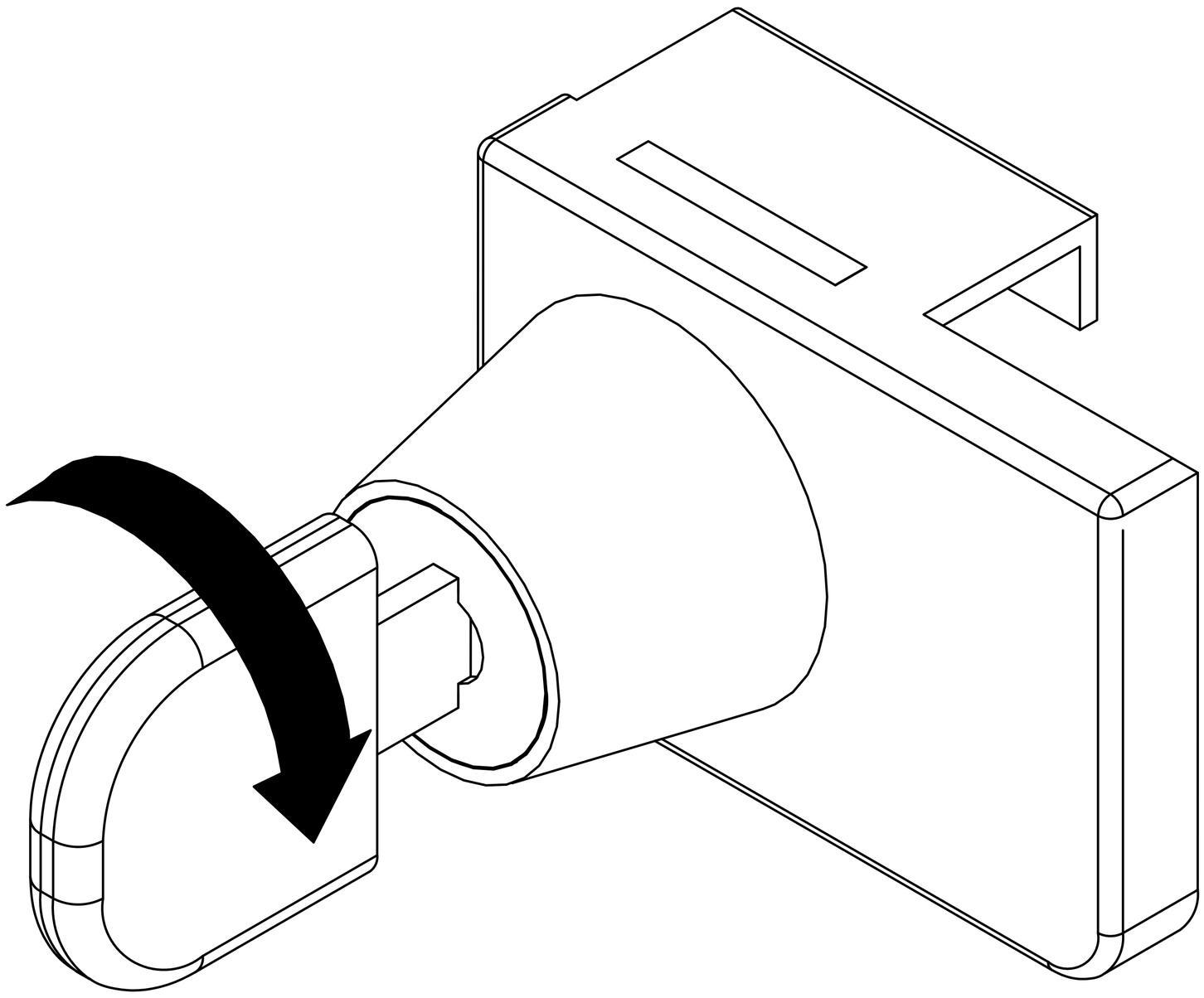

Step 35

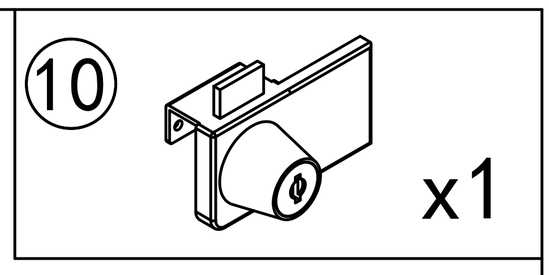

first

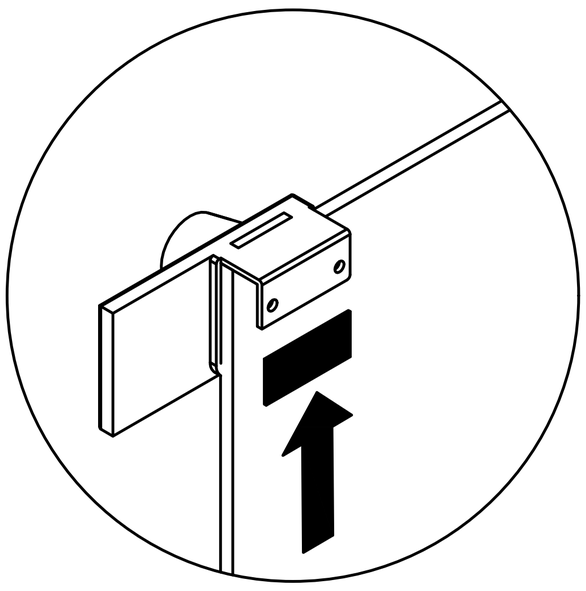

second

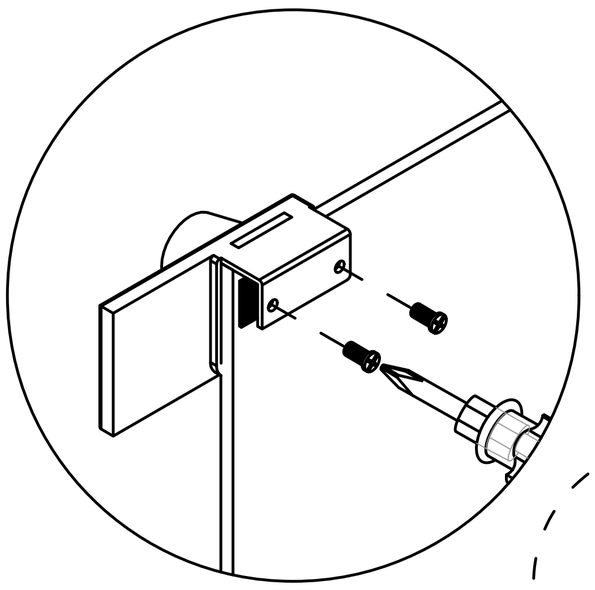

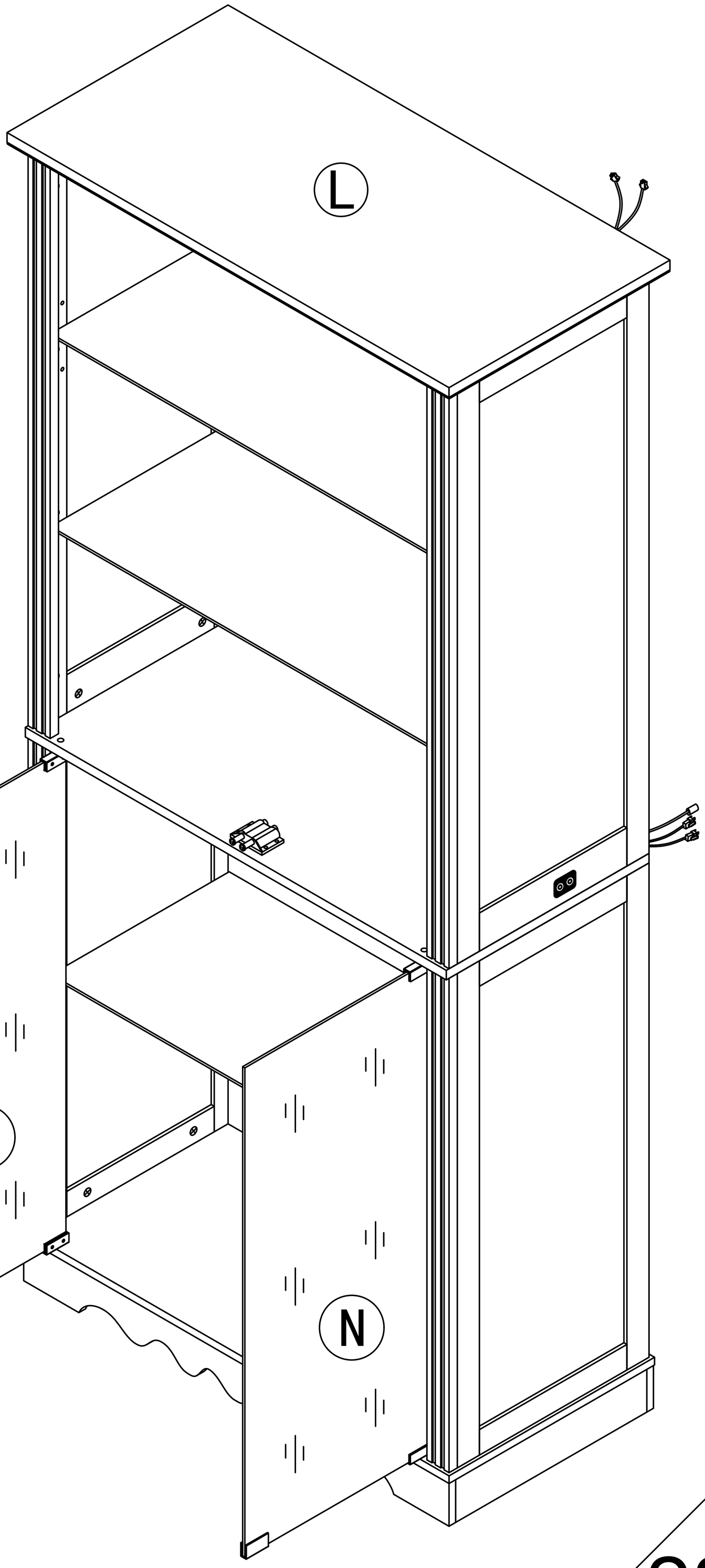

Step 36

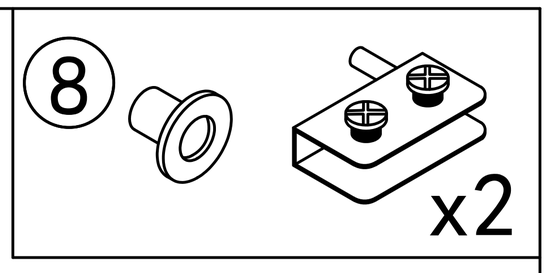

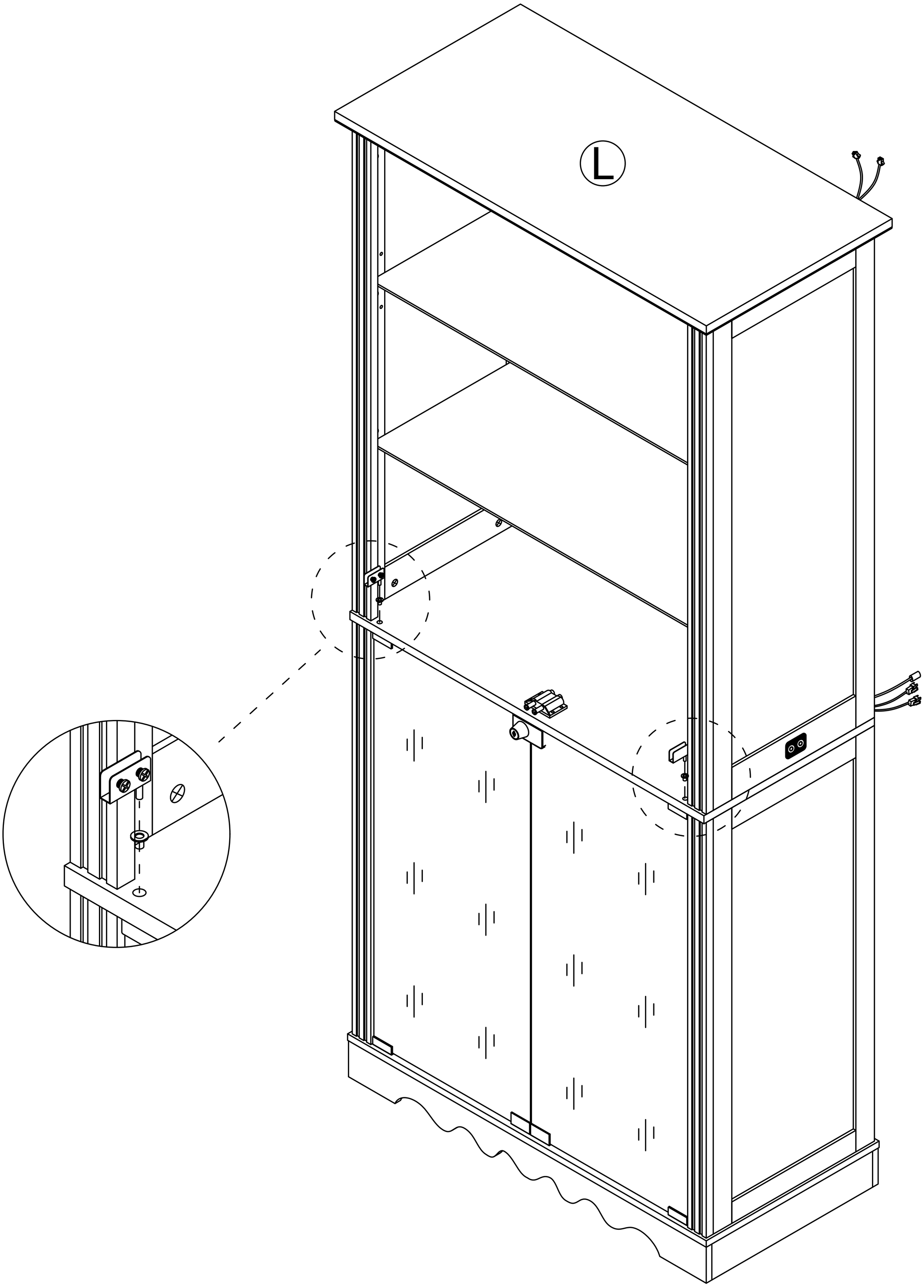

Step 37

Pay attention to the direction of the door hinge during installation

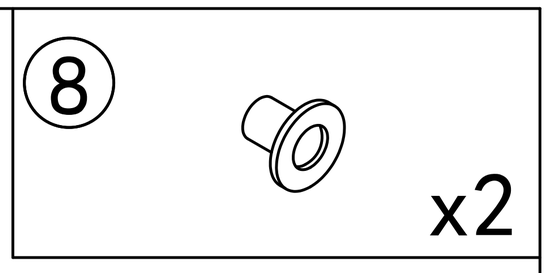

When installing a glass door, it is recommended to have two people install it to avoid the glass door colliding or hitting oneself.

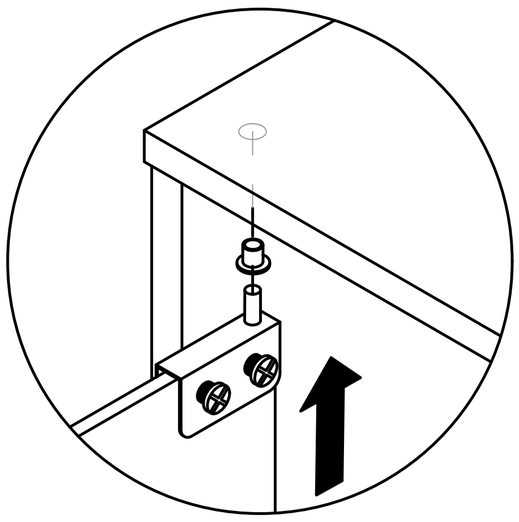

first

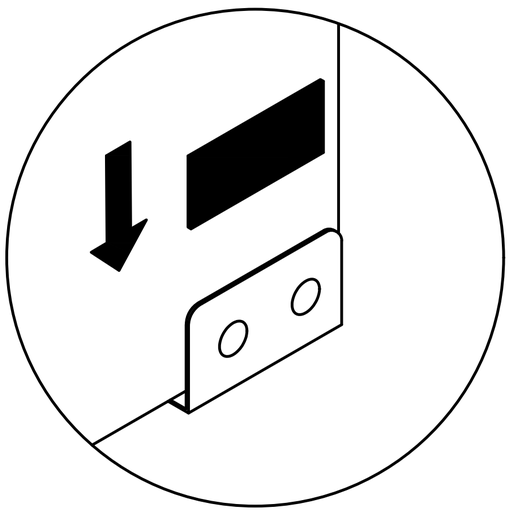

second

After installing the glass door, place the black gasket on the side where the screws are installed

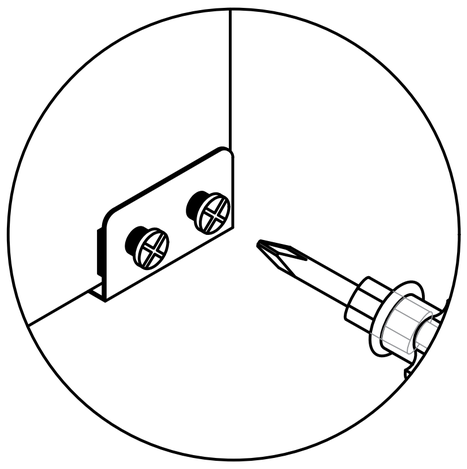

third

Locking screw

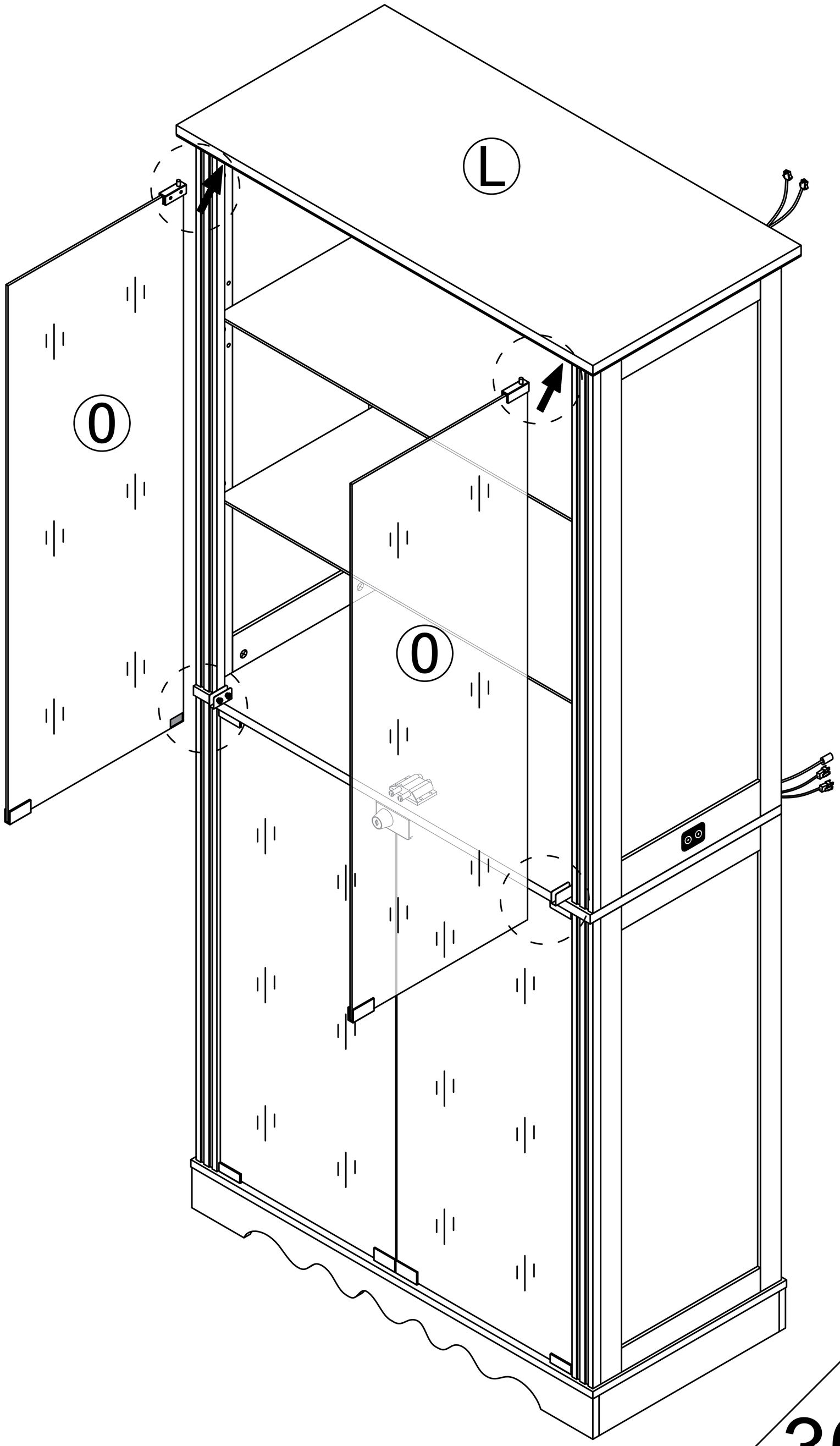

Step 38

Open the glass door

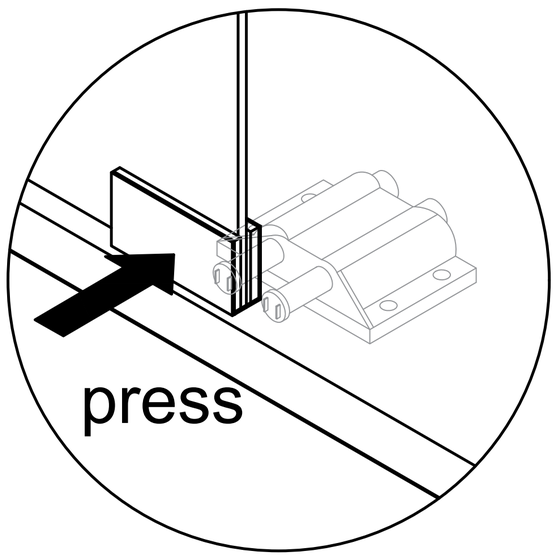

Close the glass door

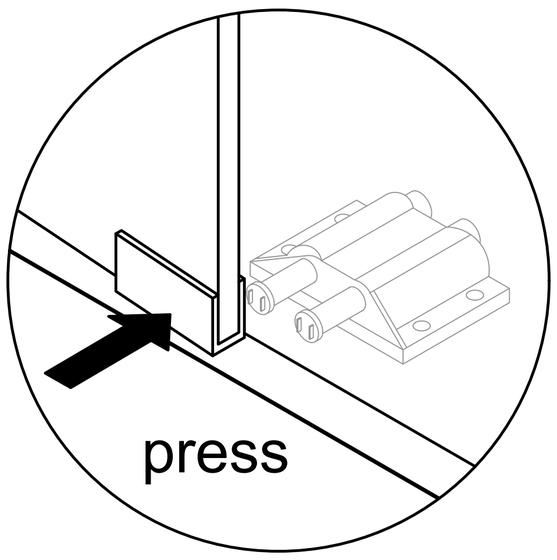

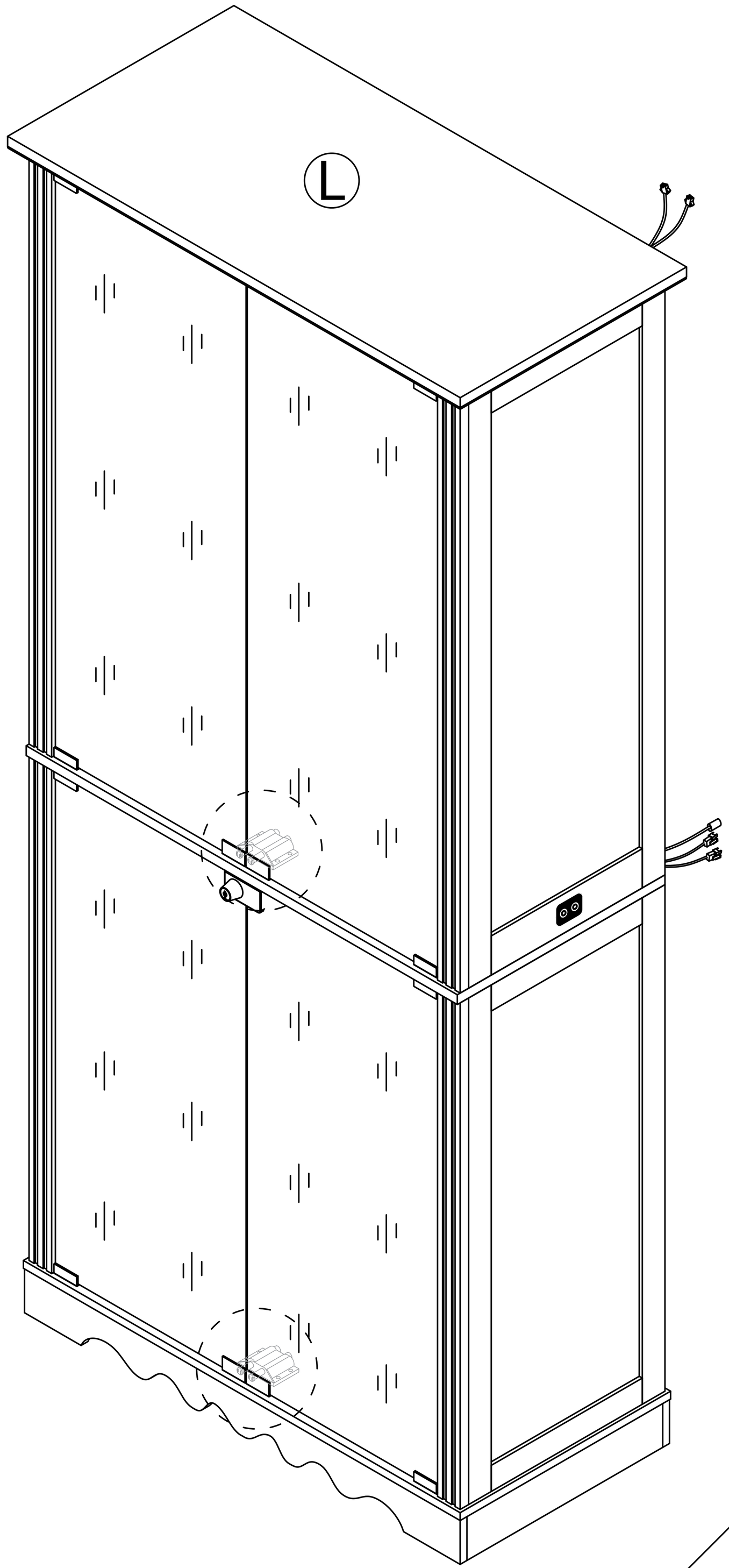

Step 39

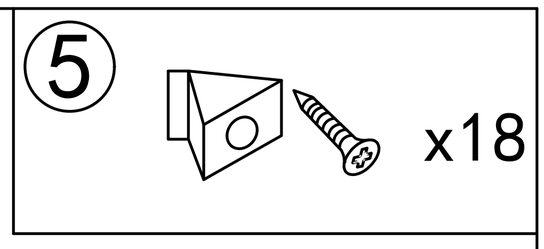

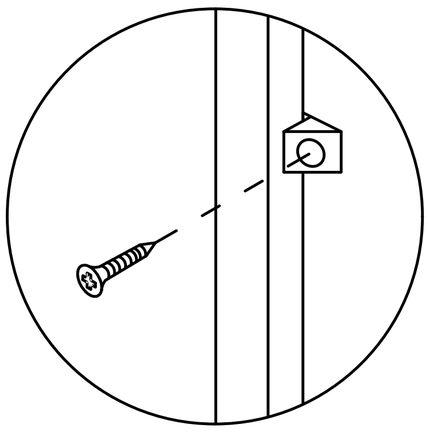

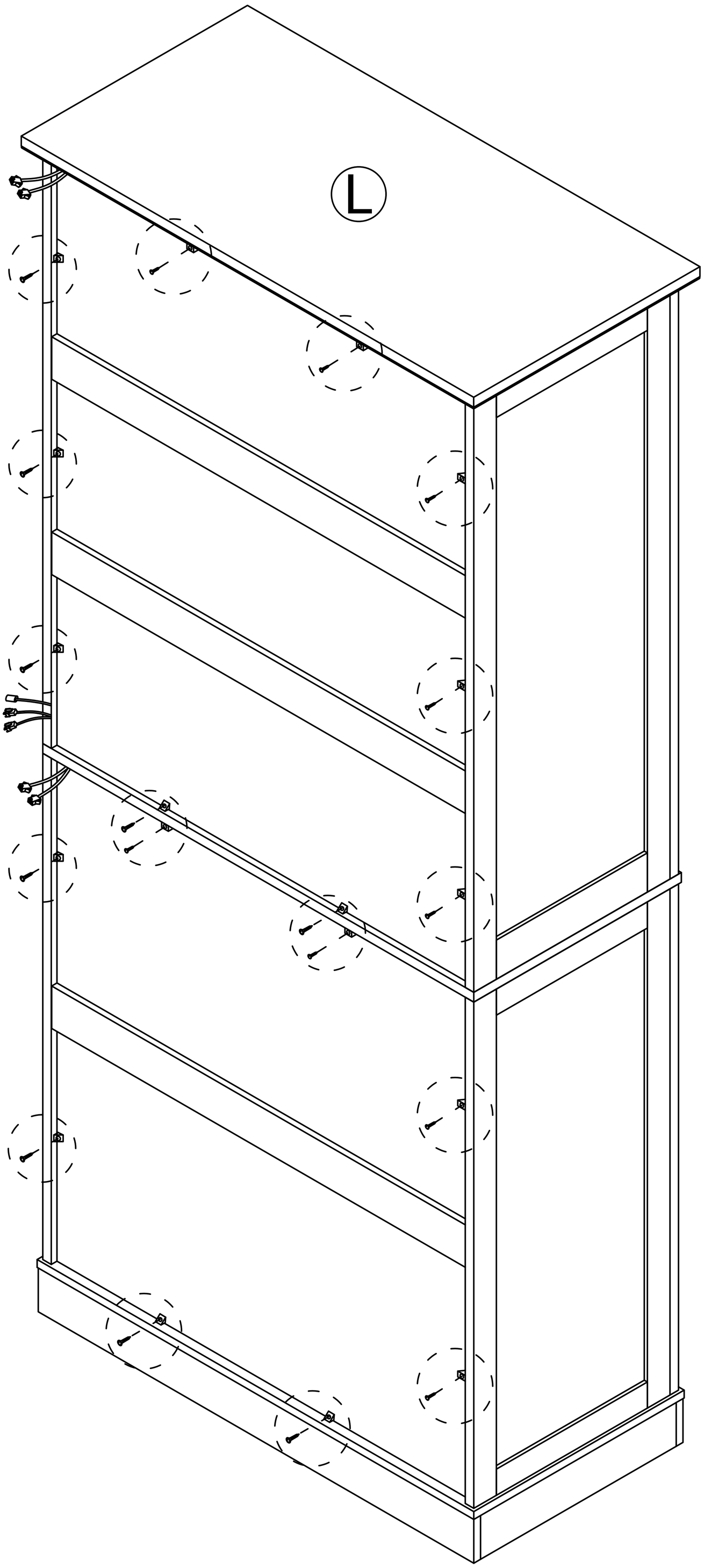

Step 40

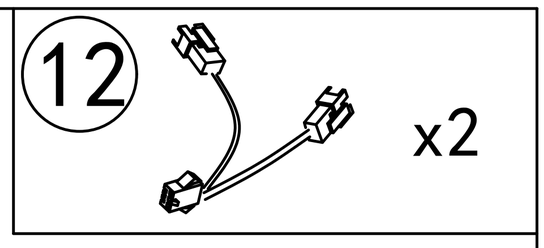

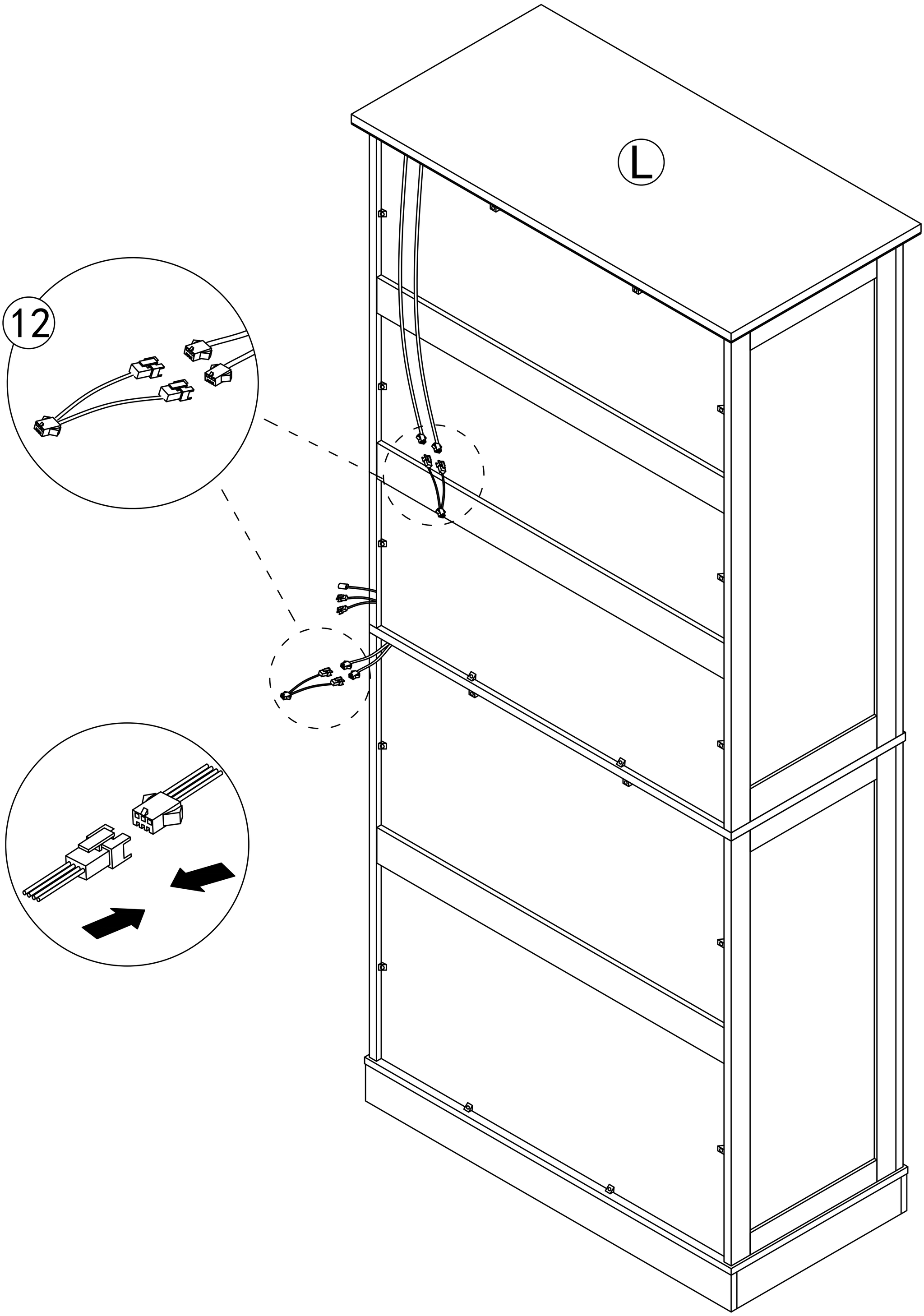

Step 41

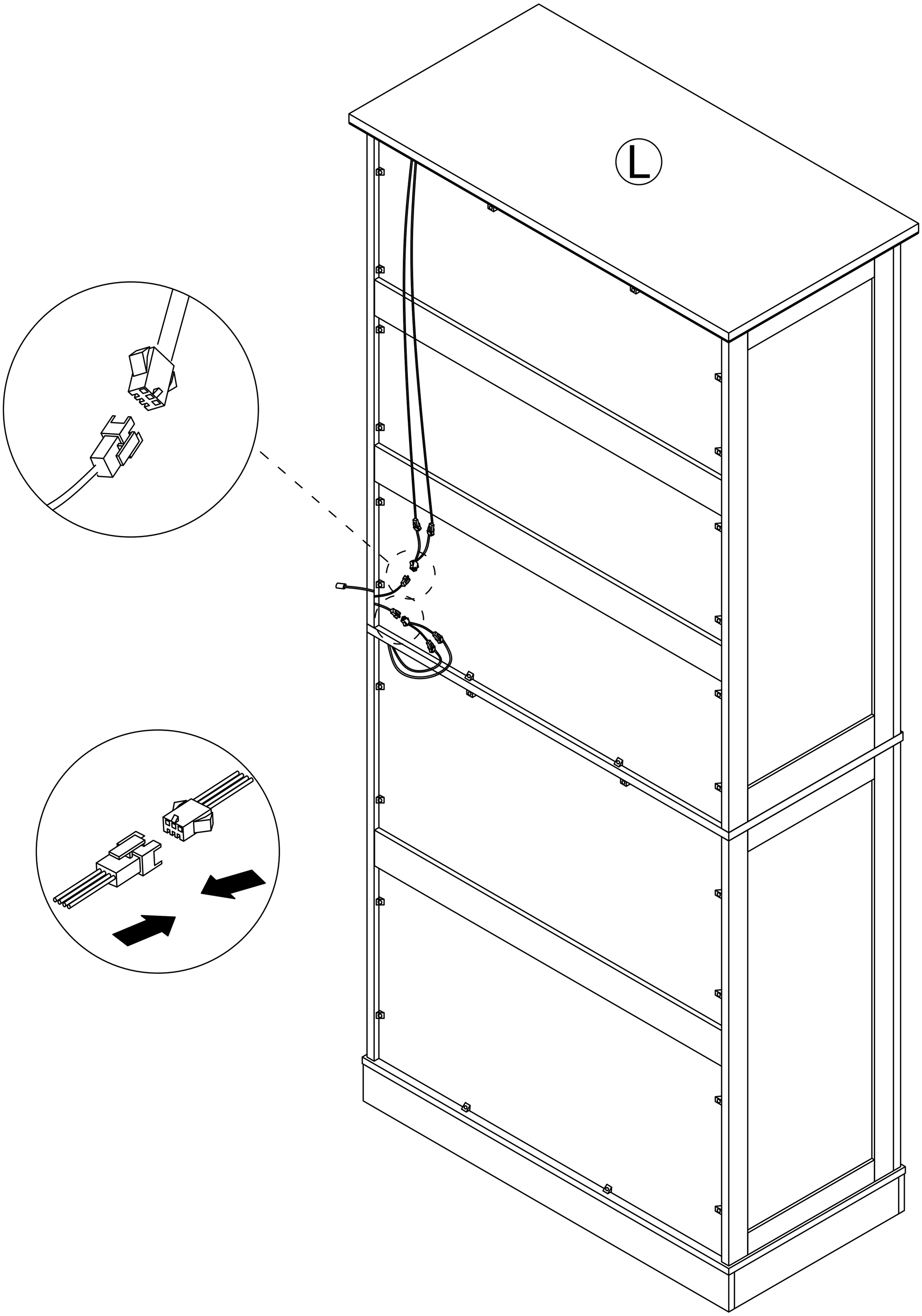

Step 42

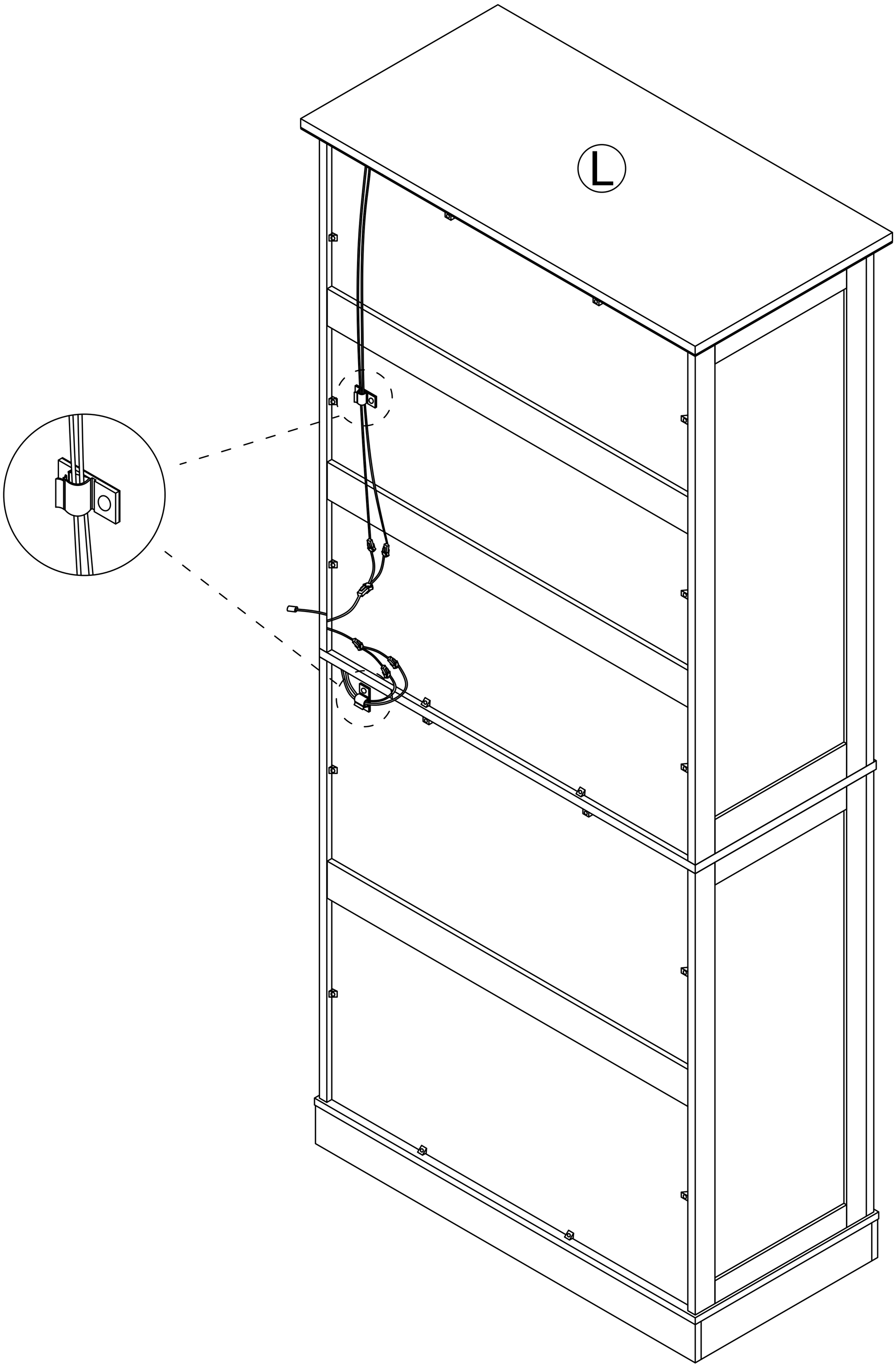

6 x2

Step 43

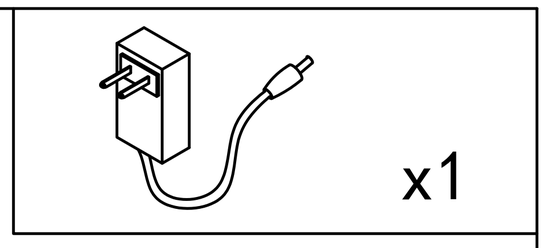

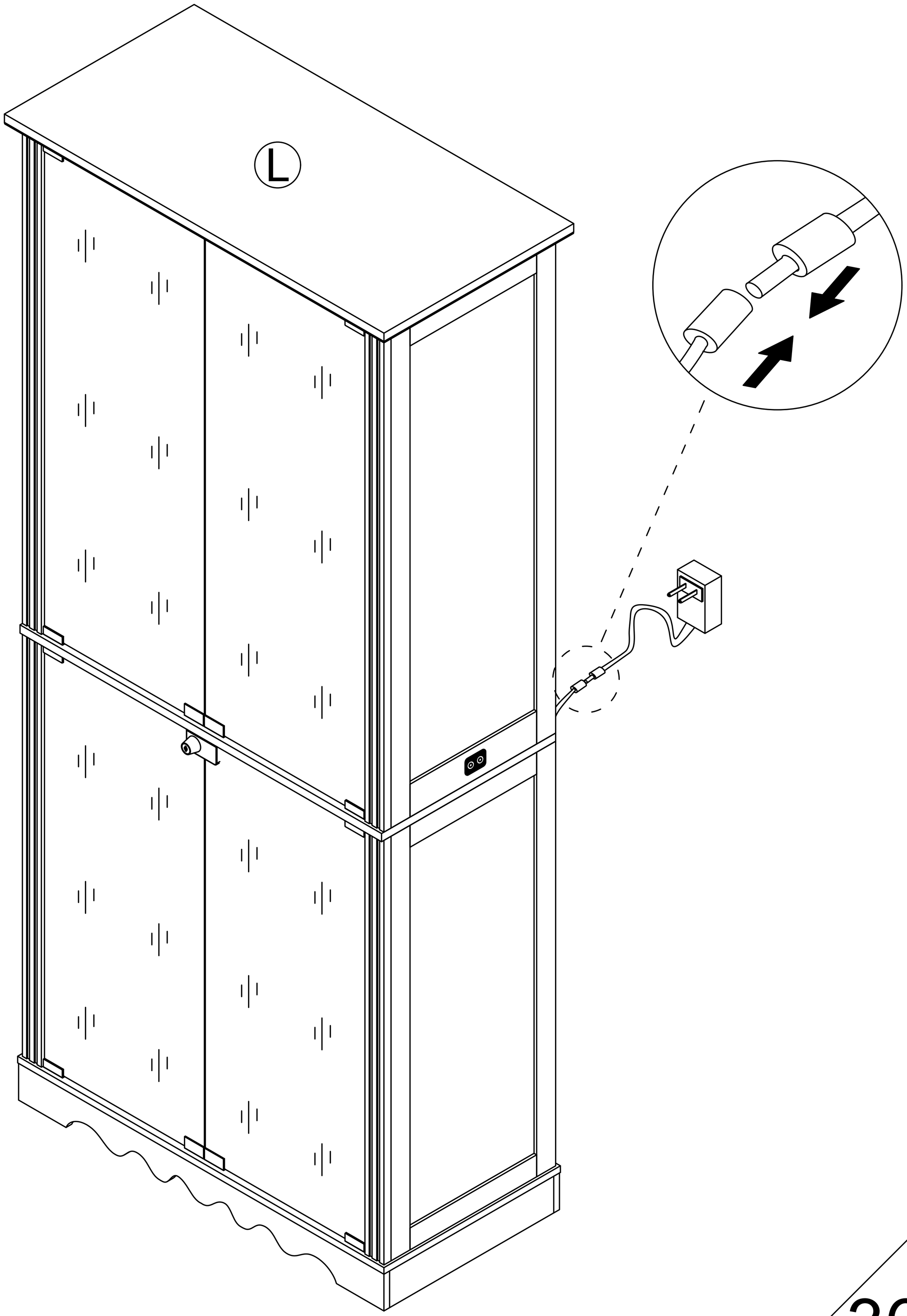

Step 44

Install as required

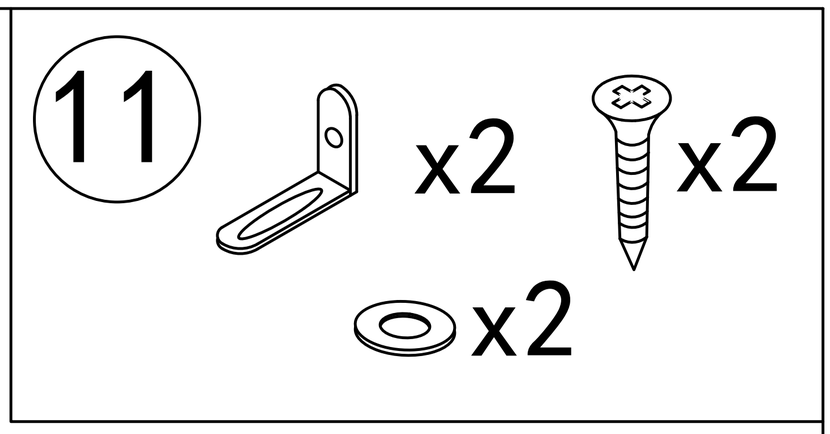

3.5x14mm

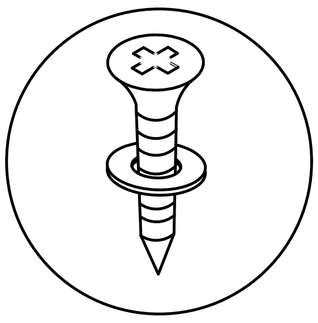

Install the anti fall hardware on the cabinet as shown in the picture first

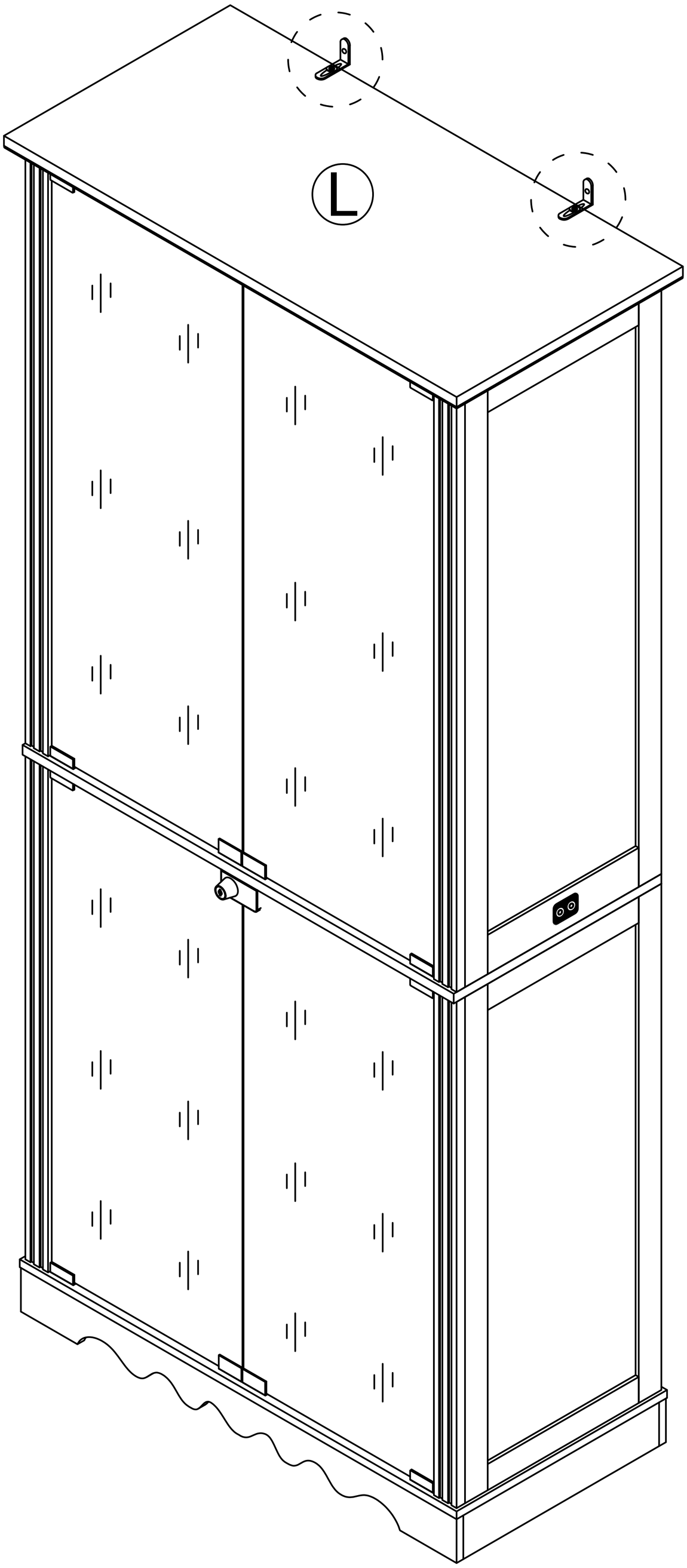

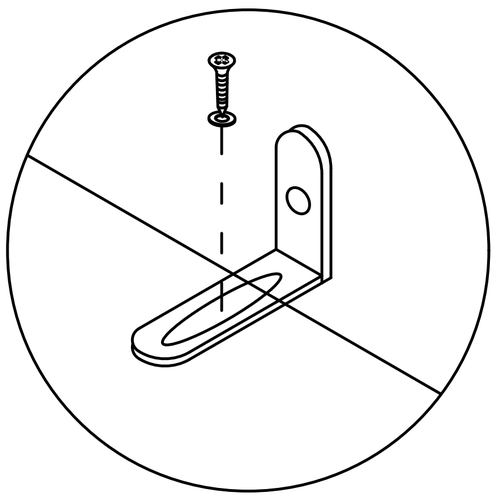

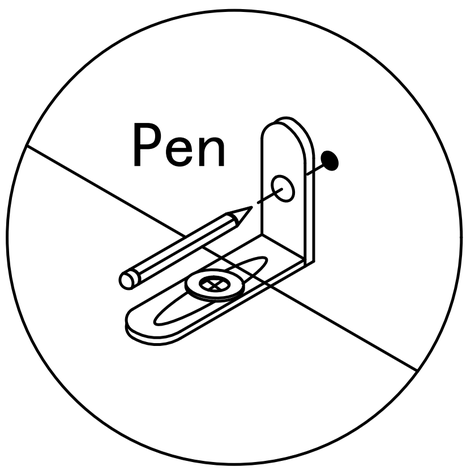

Then mark the wall with a pen through the holes in the anti-fall hardware

Step 45

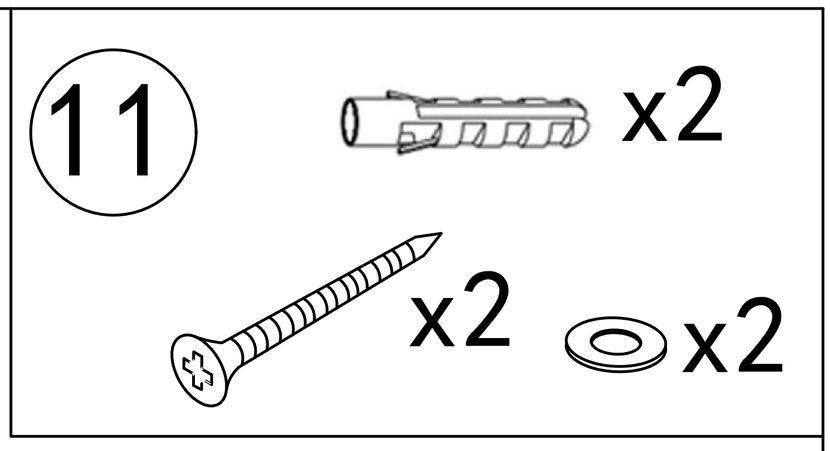

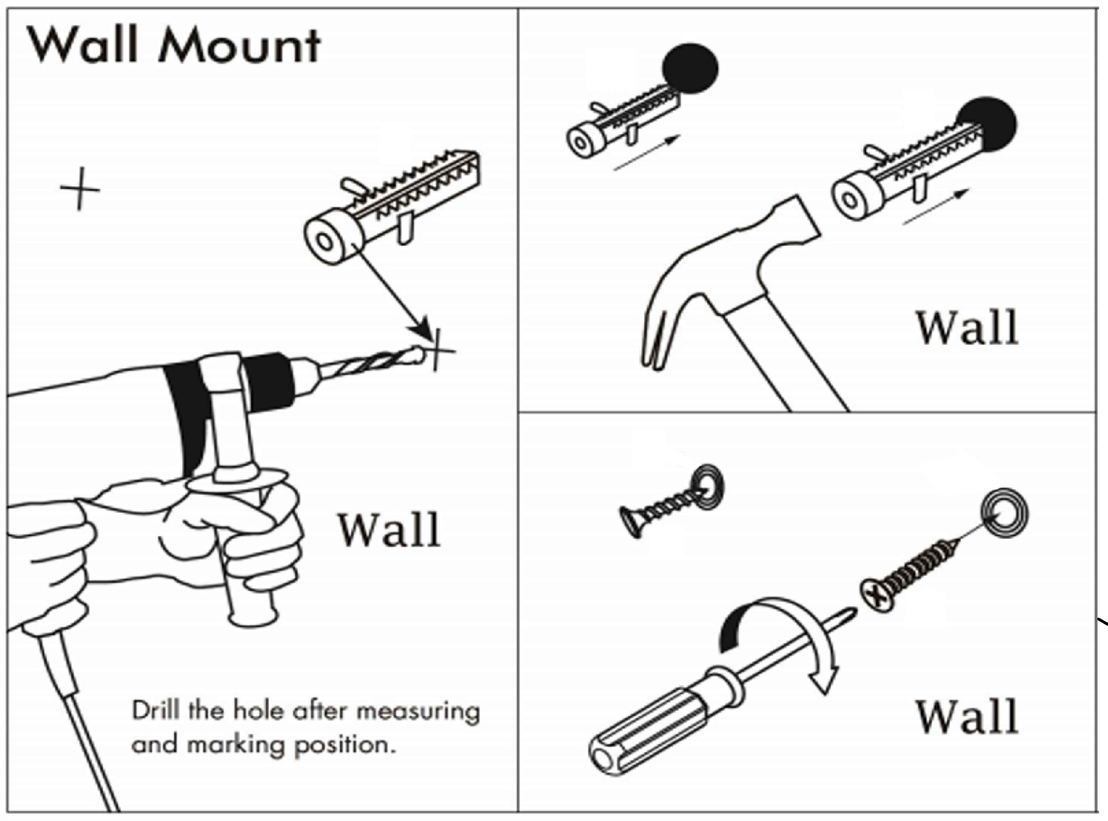

Drill the hole with an electric drill and punch in the colloidal particles

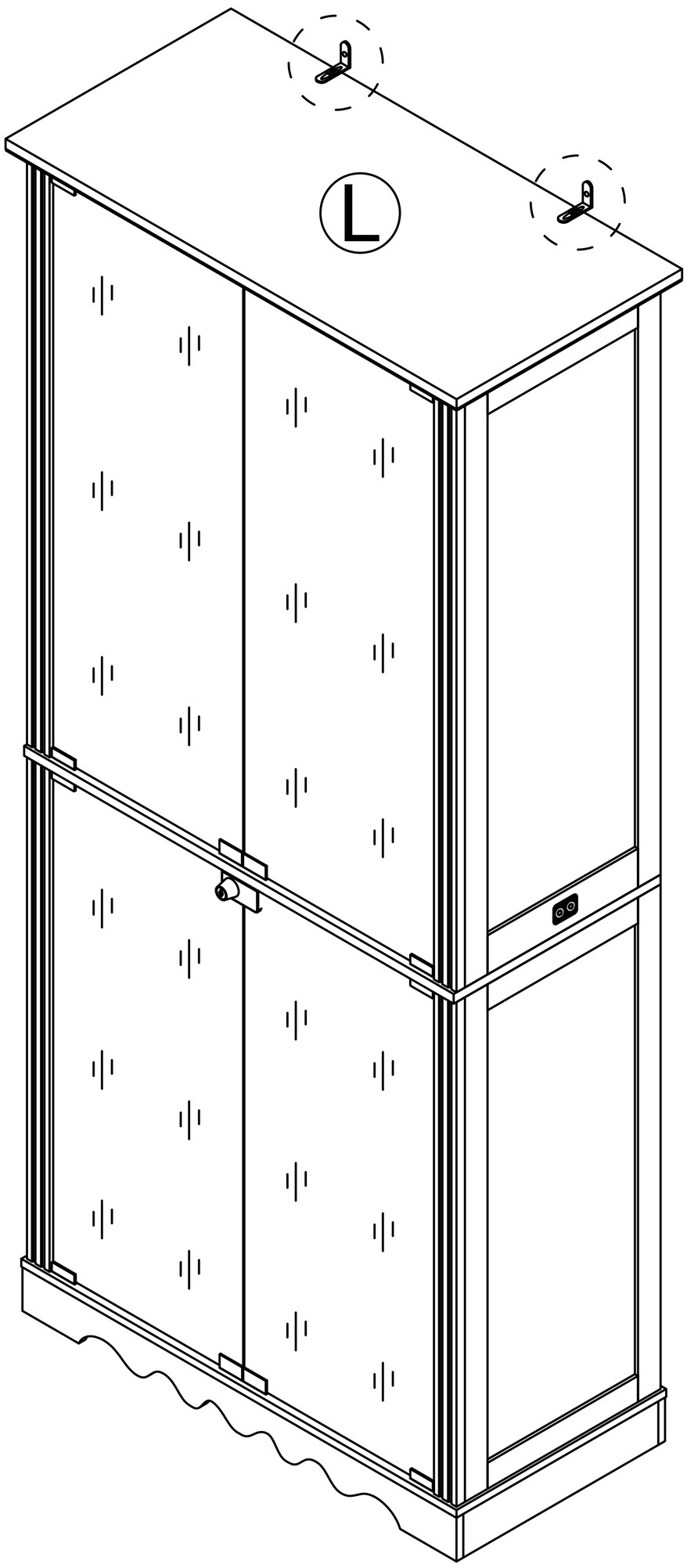

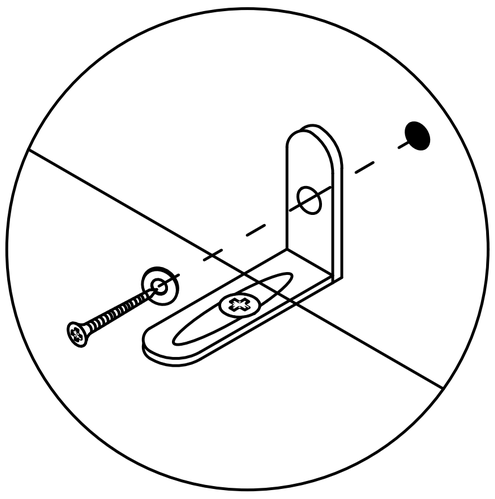

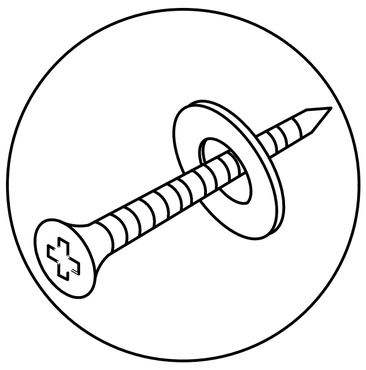

4x45mm

Fix the dressing table to the wall

User's Guide

Thank you for purchasing this product. To use this product, please plug it into a 12V DC power supply. Please use if the product works normally after connecting to power.

Introduction

The box is an intelligent controller with 2 touch buttons. It can turn ON/OFF the light, change light colors, and adjust the light luminance.

Product Show

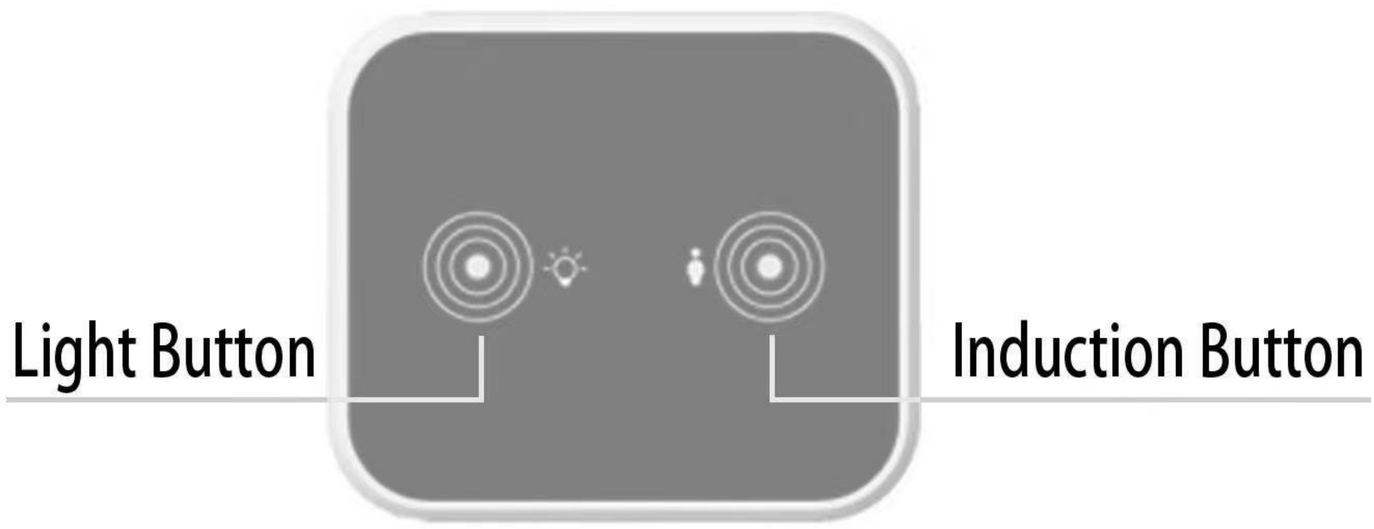

ATTENTION PLEASE

1. If there is no touch response suddenly, Re-plug the power to reset the touch static electricity.
2. If bubbles appear on the panel, remove the protective film.

Operation

This touch button is used to turn on/off, change colors, and adjust brightness.

A. Short touch -> lighting on -> short touch -> change light color -> short touch -> change light color -> short touch -> lighting off. B. Long touch -> adjust the luminance

This touch button is used to turn on/off the induction function.

A. Short touch to turn on the induction function. It can auto-turn on the light when people are close to the controller in 1 meters. It can auto power off the light when the body is far away from the controller after 30 seconds.

B. Long touch to turn off the induction function.

C. Note: When you touch the light button to change the light modes, the induction function will automatically turn off. It is best to turn on this function after selecting the light color and adjusting the brightness you want.