ASSEMBLY INSTRUCTIONS

2621Q1

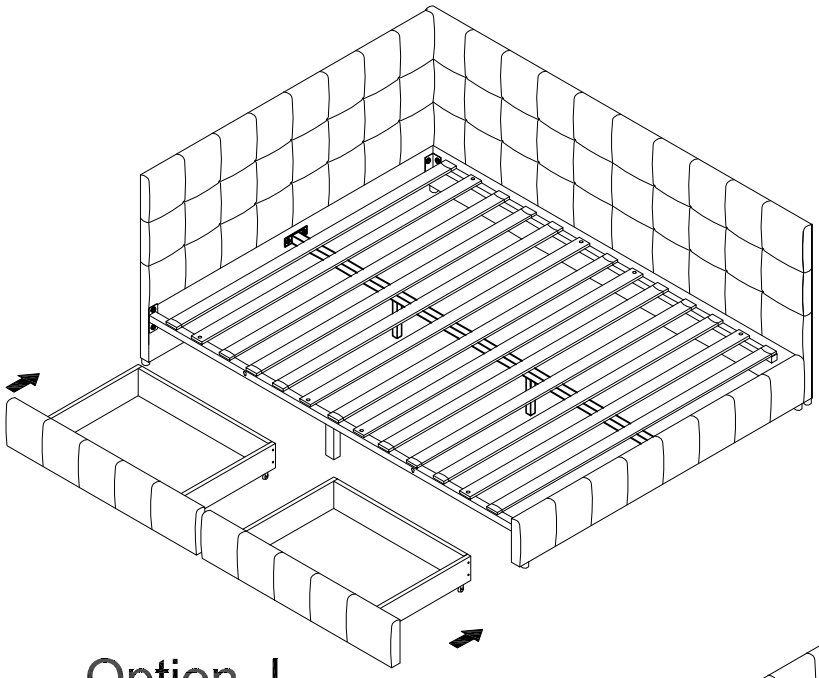

Option L

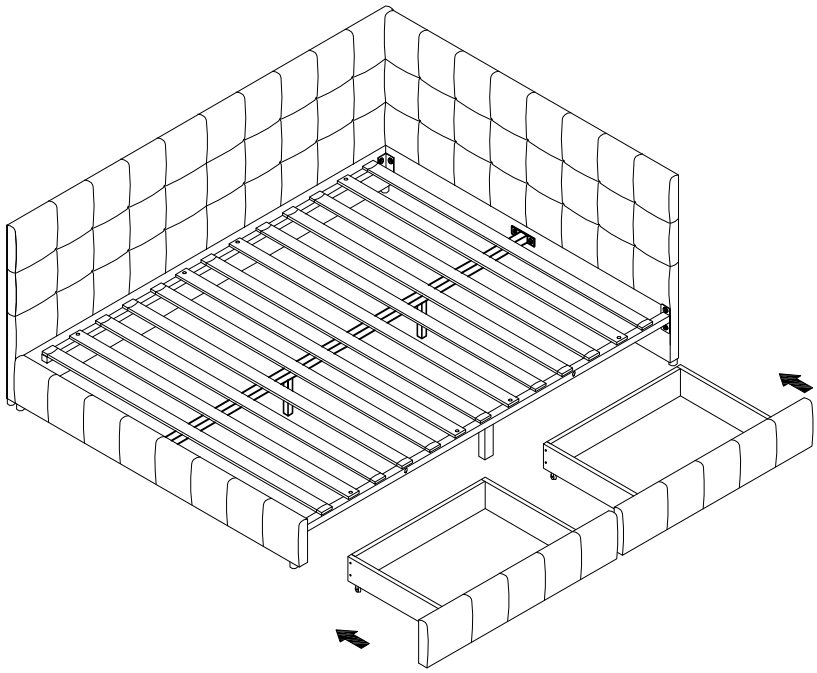

Option R

Set up the bed according to the needs of the room to choose the direction. Option L & Option R

Install all screws according to the instructions, and then tighten them completely.

PACKING DETAILS:TOTAL 2 BOXES

BOX- 1/2

2621Q1-A1 MEAS:86.61X28.15X5.59 INCH

1 Headboard 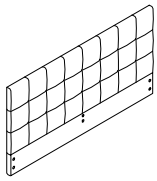 1PC	3 Side rail -1 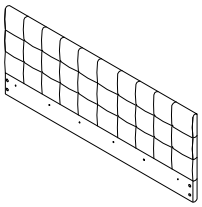 1PC	14 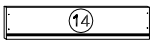 4PCS	15 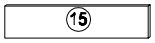 2PCS
16 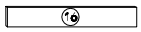 4PCS	17  2PCS	18  2PCS	19 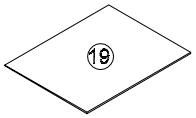 2PCS

PACKING DETAILS:TOTAL 2 BOXES

BOX- 2/2

2621Q1-B1 MEAS:86.61X10.04X7.28 INCH

② Footboard 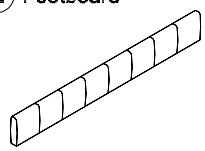 1PC	④  2PCS	⑤ SR Support Rail 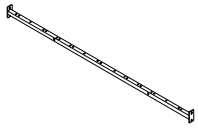 1PC	⑥ SR Support Rail 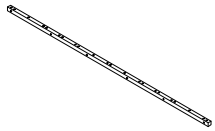 1PC
⑦ Center support rail 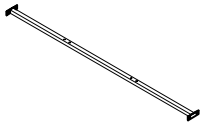 1PC	⑧ Support Leg 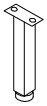 3PCS	⑨ Leg  6PCS	⑩ Single Sided Plastic cap  18PCS
⑪ 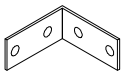 1PC	⑫  8PCS	⑬ 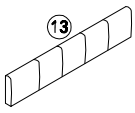 2PCS	⑳ 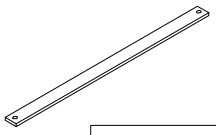 4PCS
㉑ Slat 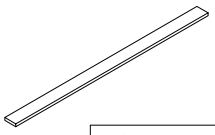 9PCS	A 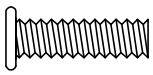 m8*30mm 21PCS	B  m6*50mm 10PCS	C 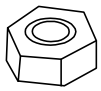 M6 12PCS
D  m6*19mm 22PCS	E  m8 21PCS	F 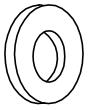 m8*19mm 21PCS	G  m8 1PC
H  m6 1PC	I 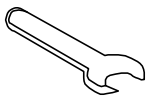 M6 1PC	J 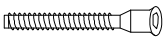 m6 * 40mm 40PCS	K  8*15mm 32PCS
L 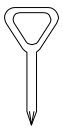 1PC	M  m6*30mm 10PCS	N  m6*14mm 8PCS	O  m6*60mm 8PCS

STEP 1

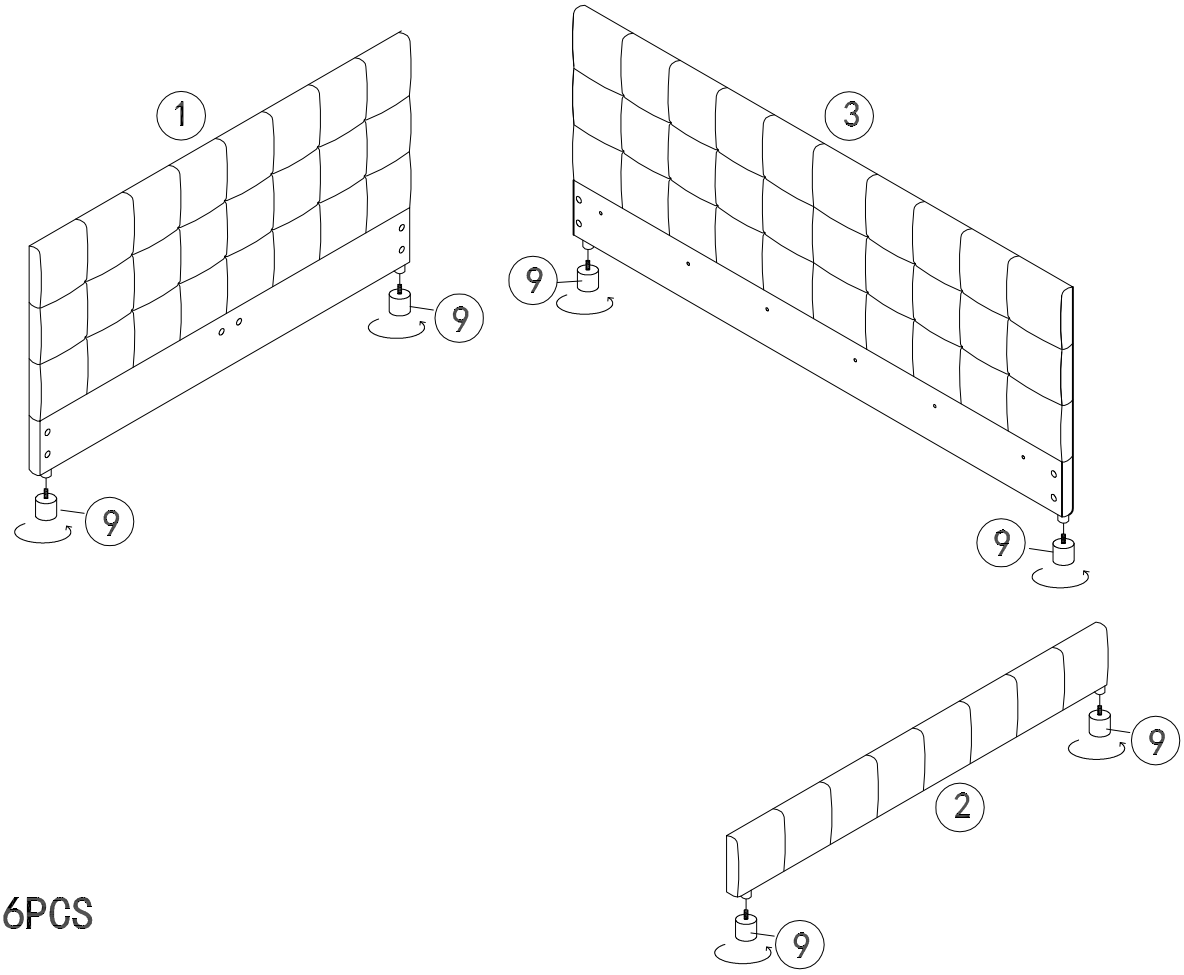

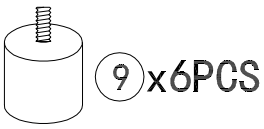

STEP 2

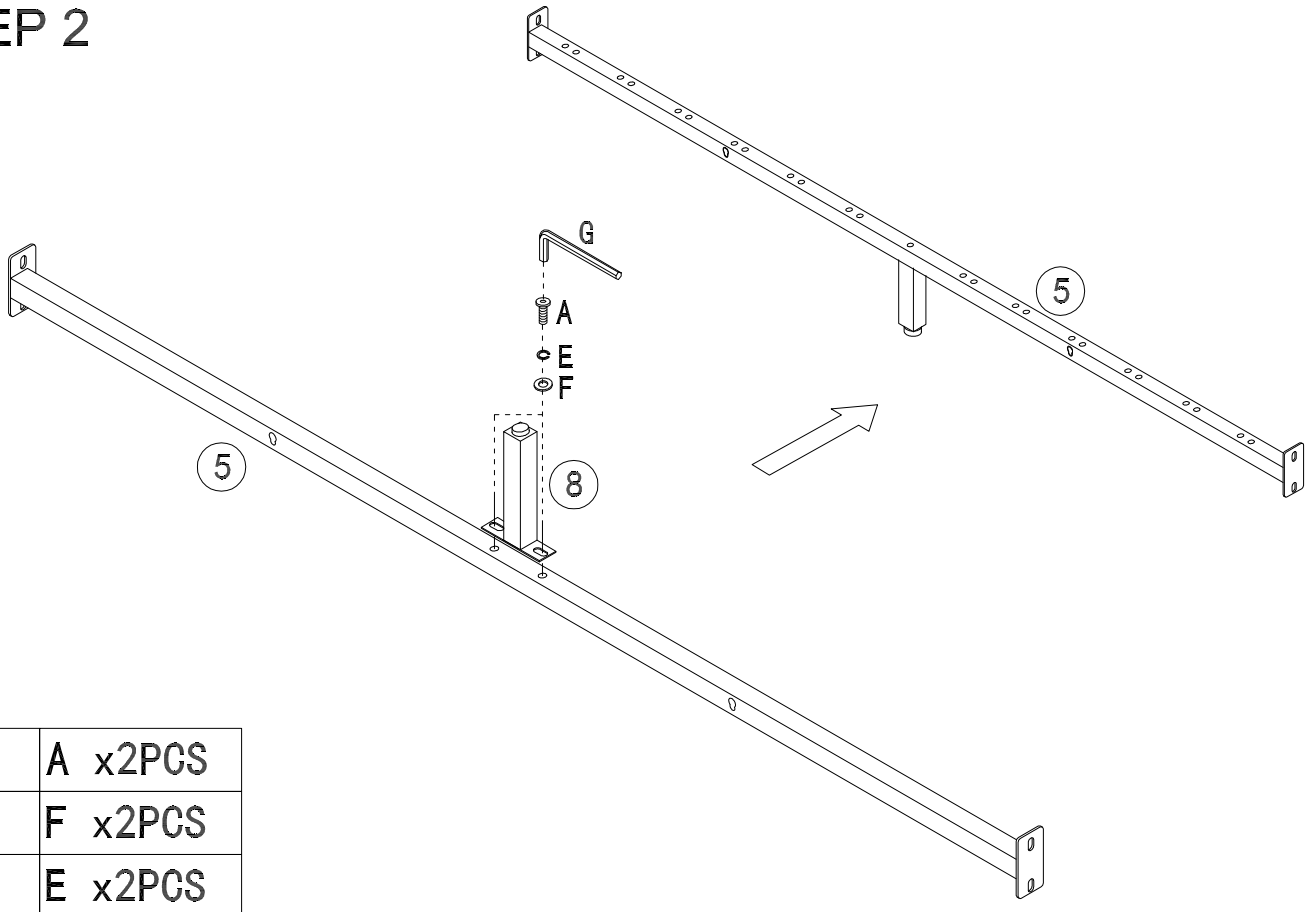

	A x2PCS
	F x2PCS
	E x2PCS
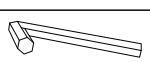	G x1PC

STEP 3

Install all screws according to the instructions, and then tighten them completely.

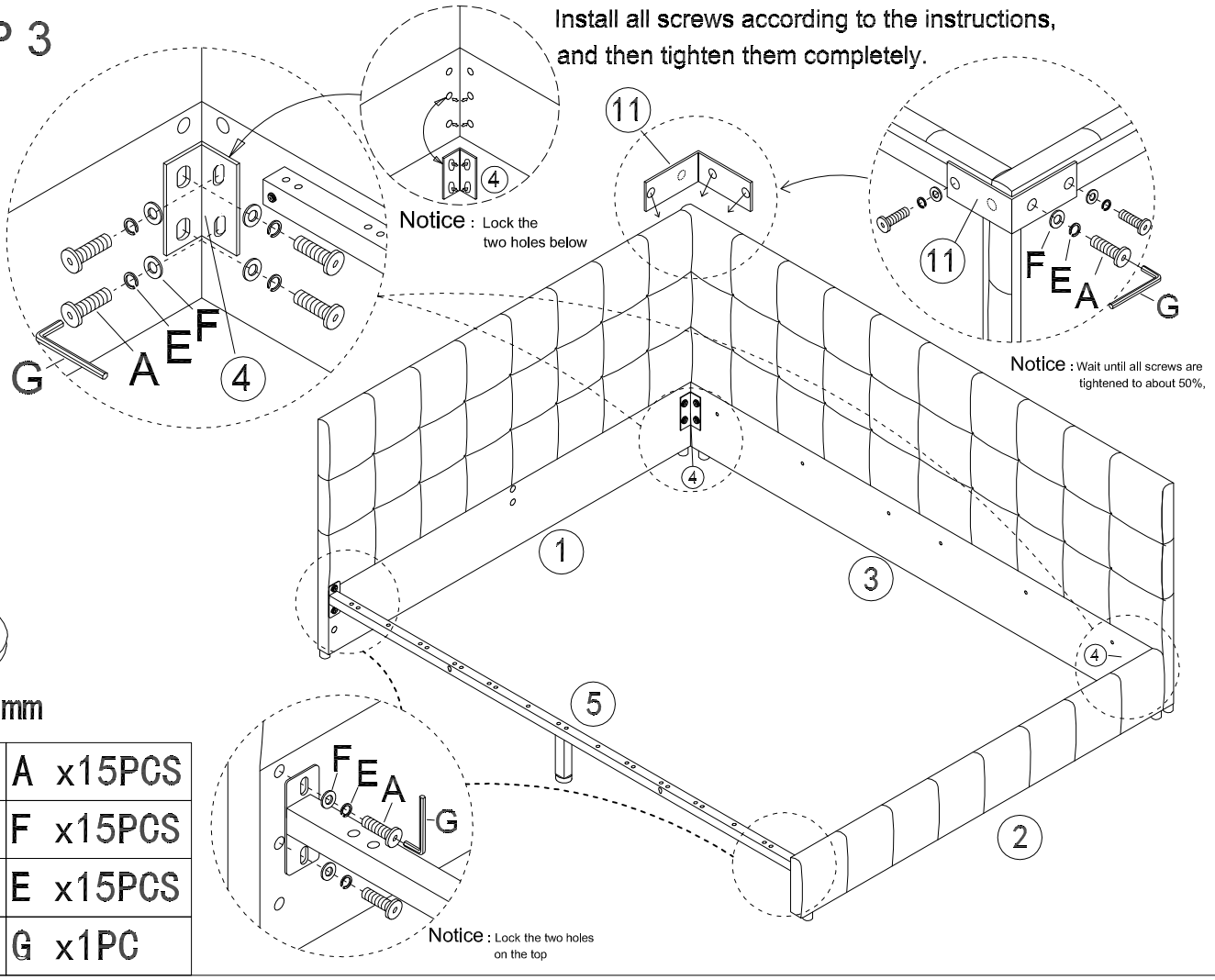

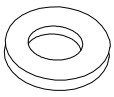

m8*19mm

	A x15PCS
	F x15PCS
	E x15PCS
	G x1PC

STEP 4

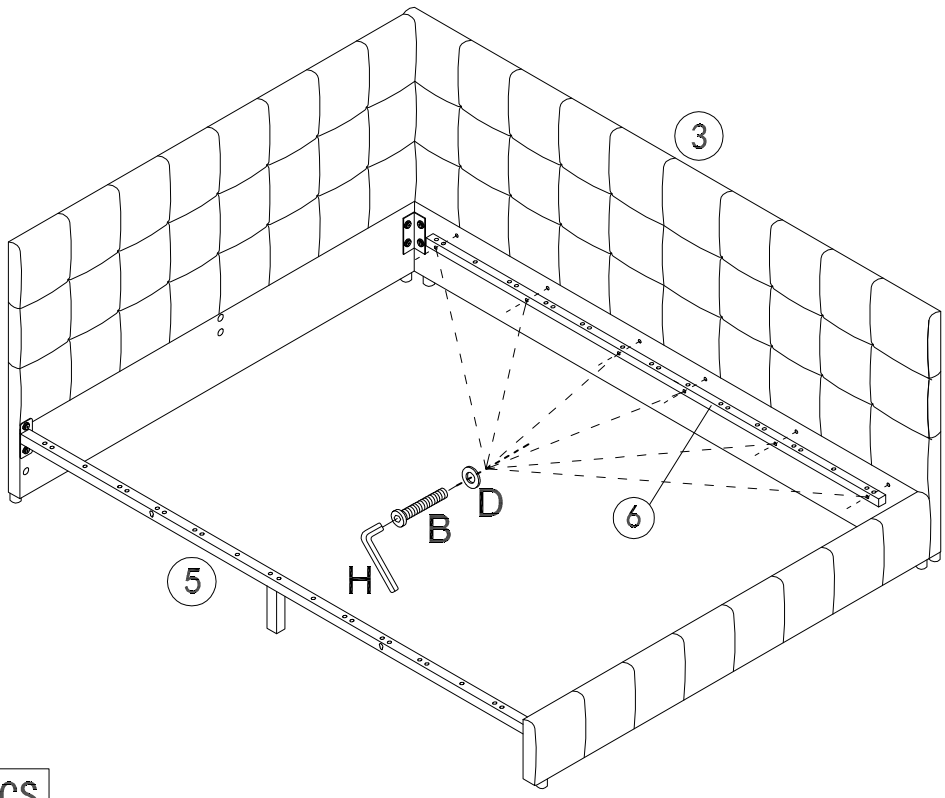

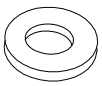

m6*19mm

	B x 6PCS
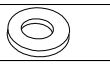	D x 6PCS
	H x 1PC

STEP 5

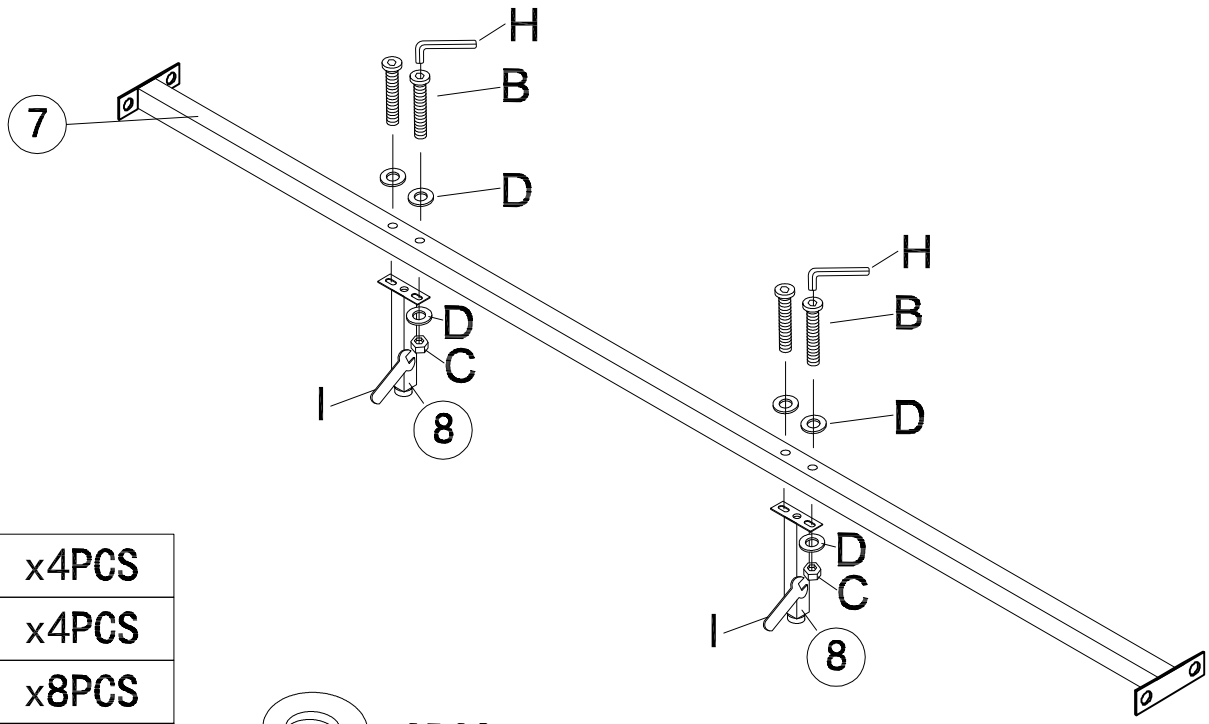

	B x4PCS
	C x4PCS
	D x8PCS
	H x1PC
	I x1PC

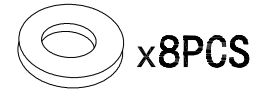

m6*19mm

STEP 6

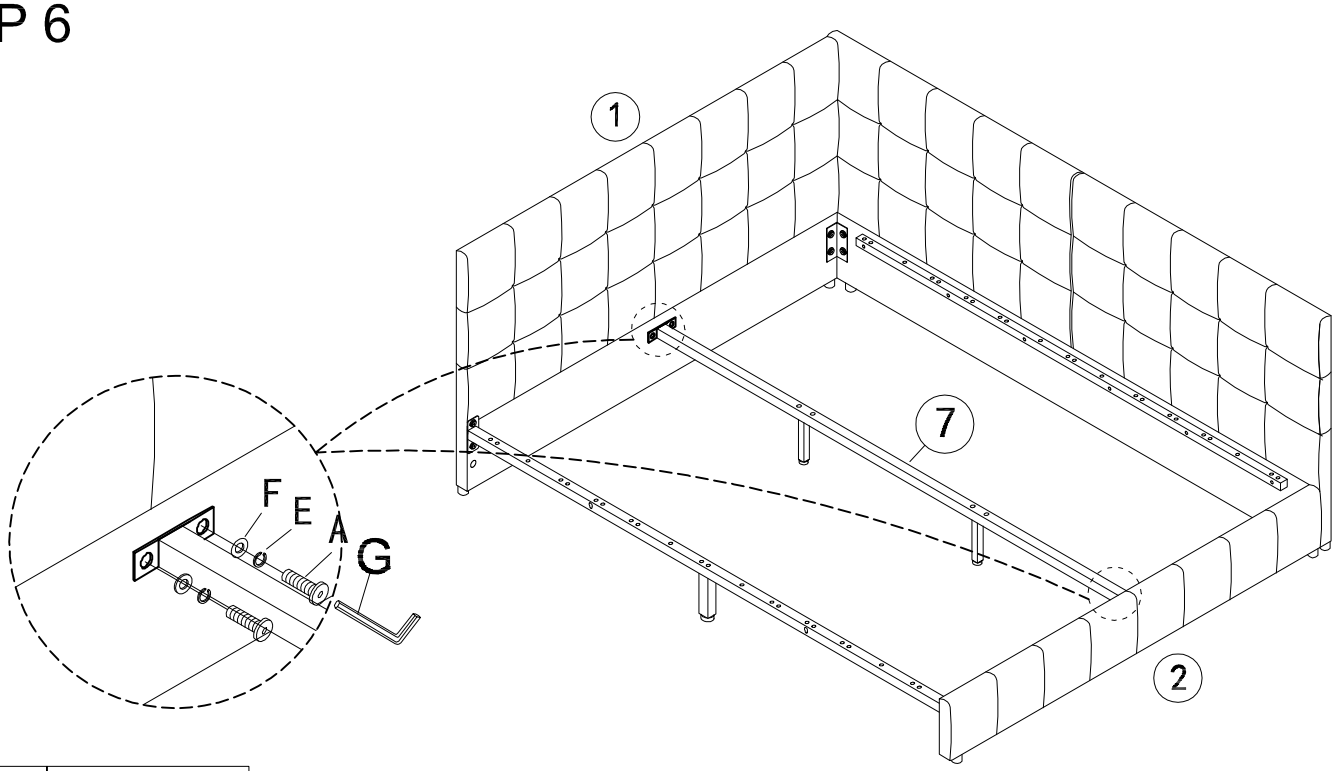

	A x4PCS
	F x4PCS
	E x4PCS
	G x1PC

STEP 7

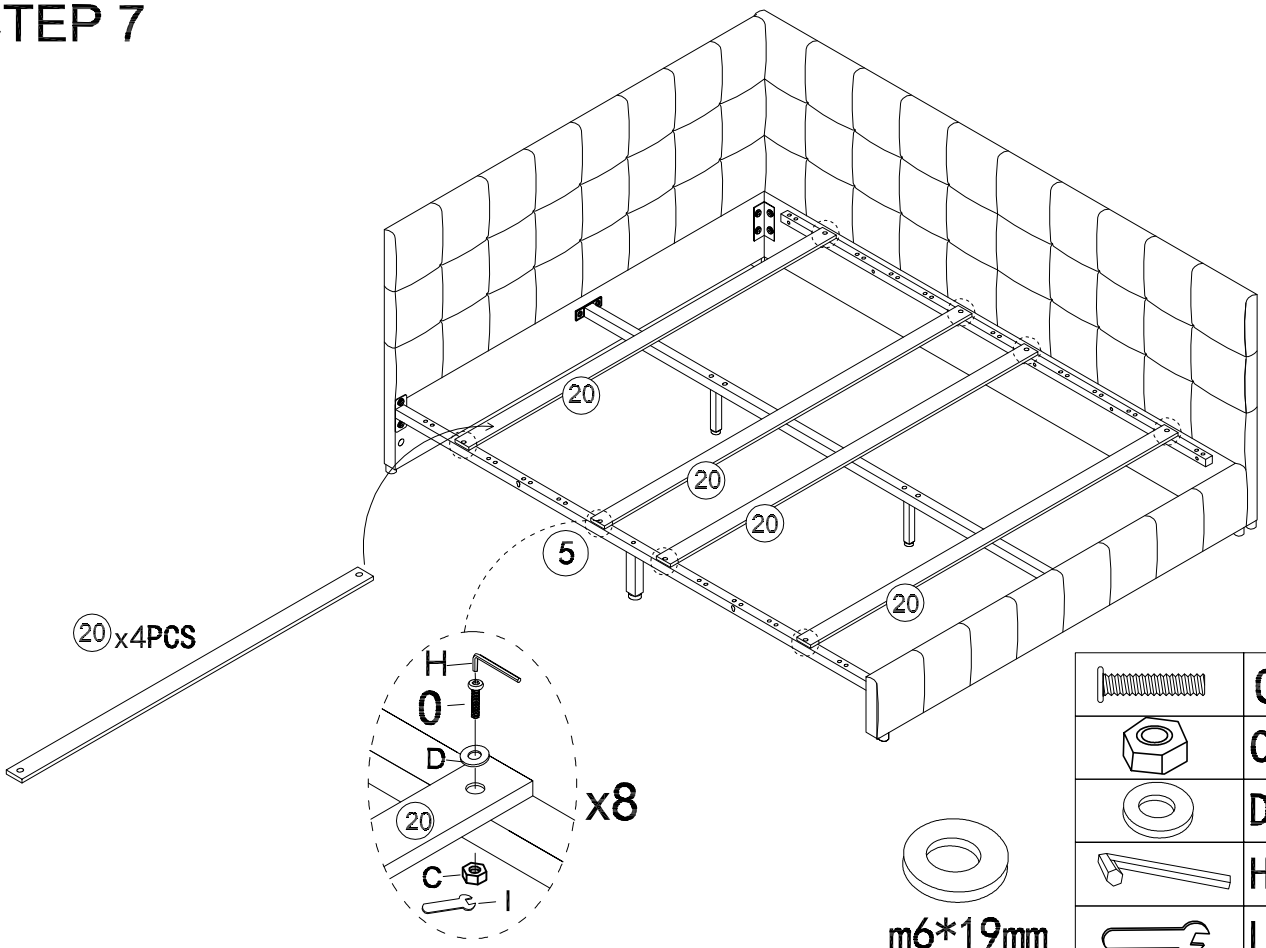

	O x8PCS
	C x8PCS
	D x8PCS
	H x1PC
	I x1PC

STEP 8

20 Slat	10 Single Sided Plastic cap
9PCS	18PCS

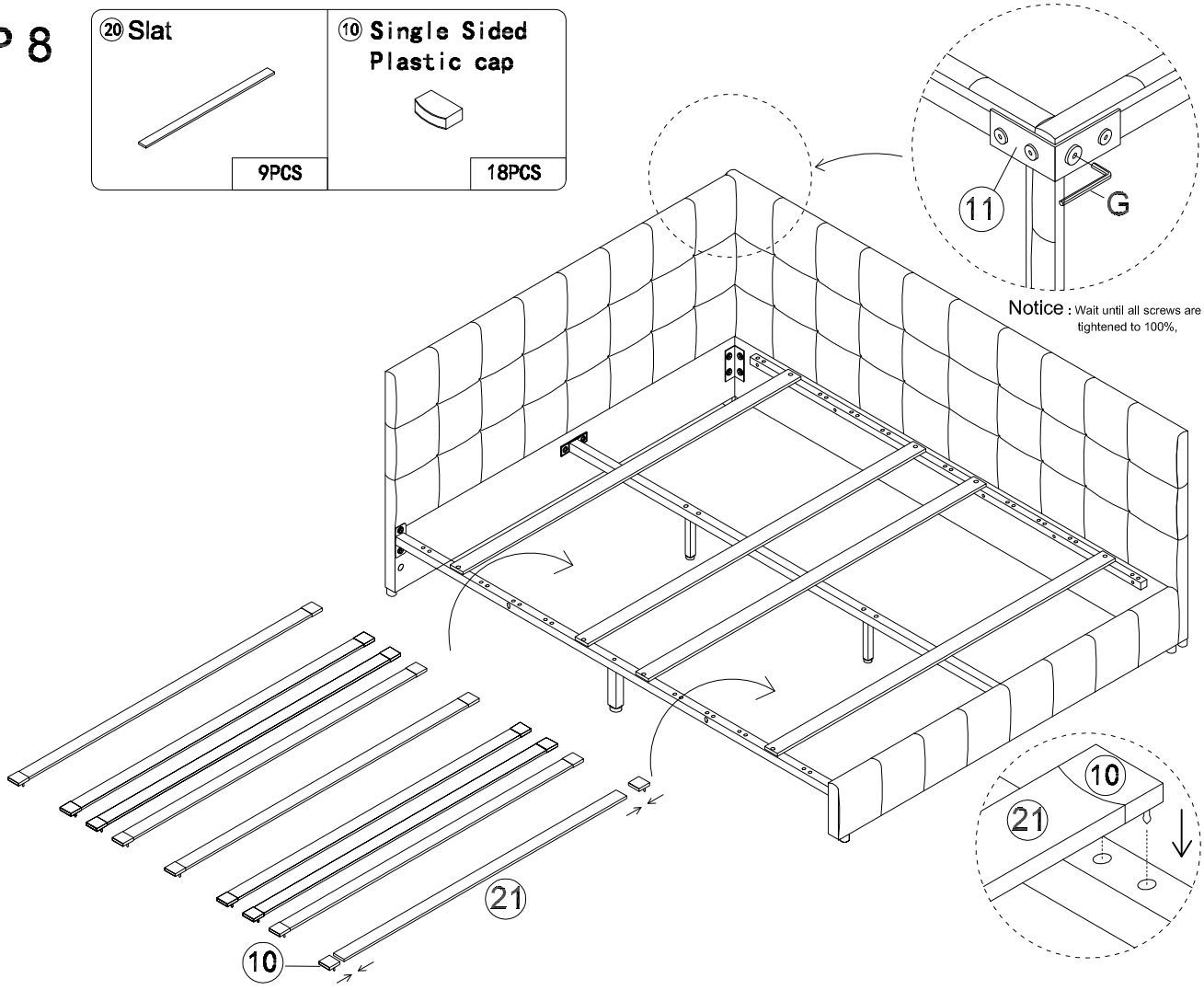

STEP 9

ASSEMBLE DRAWER

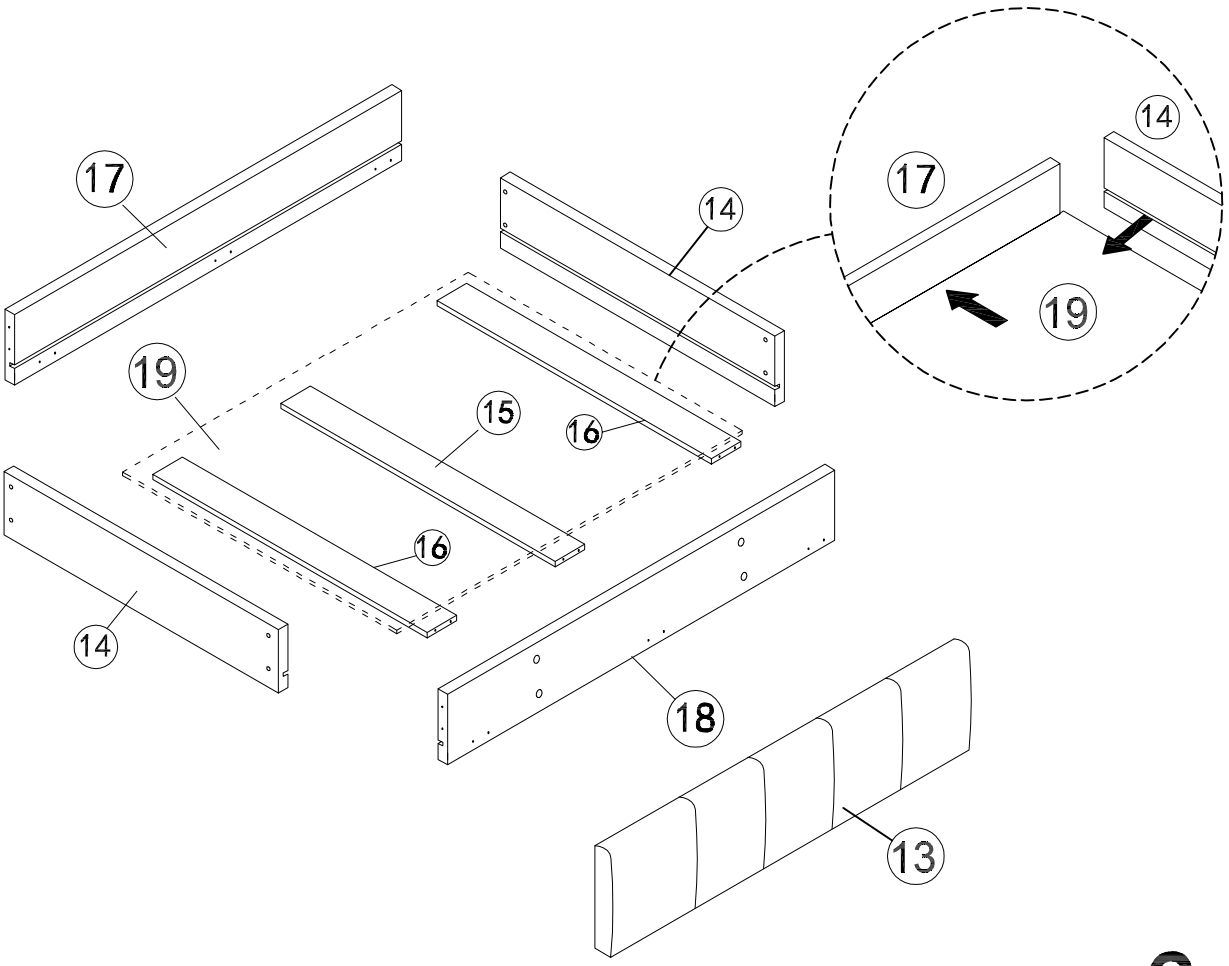

x2

STEP 10

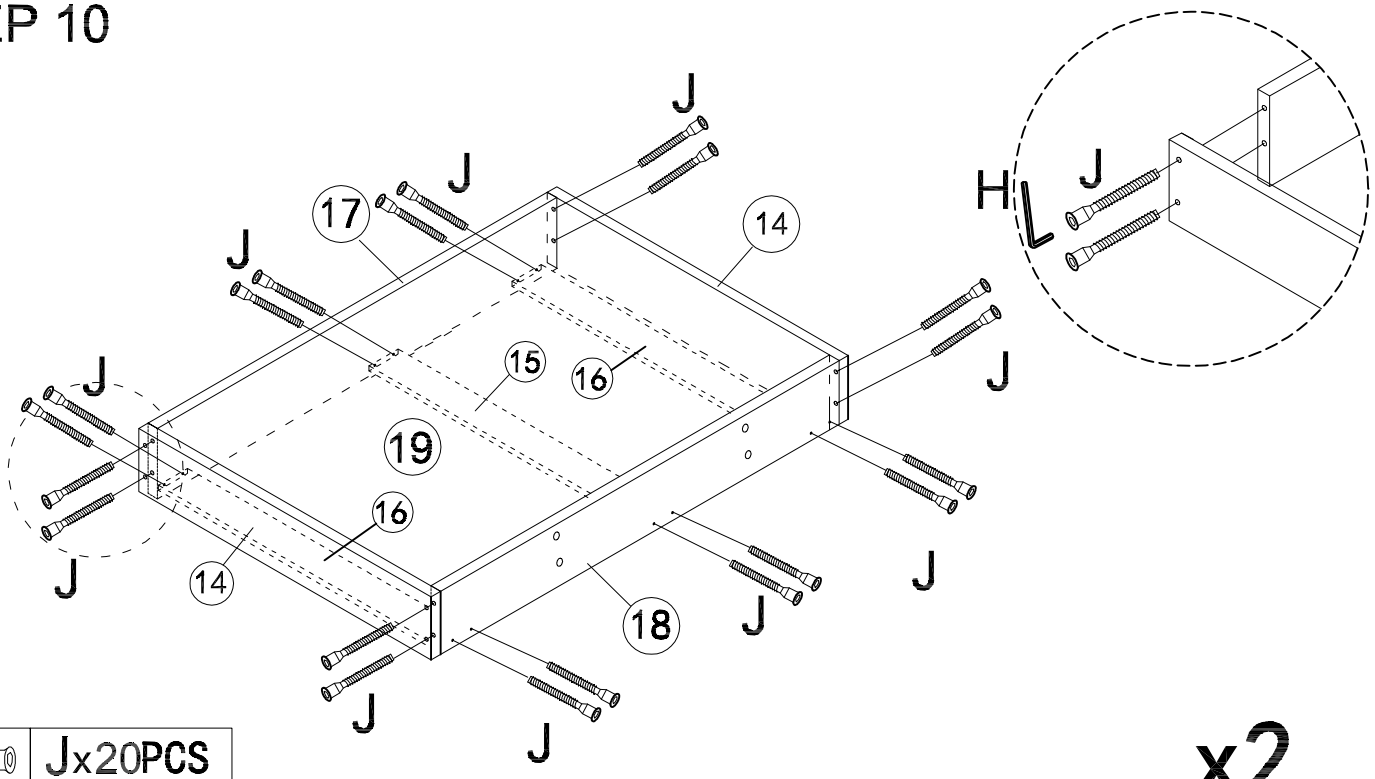

	Jx20PCS
	Hx1PC

x2

STEP 11

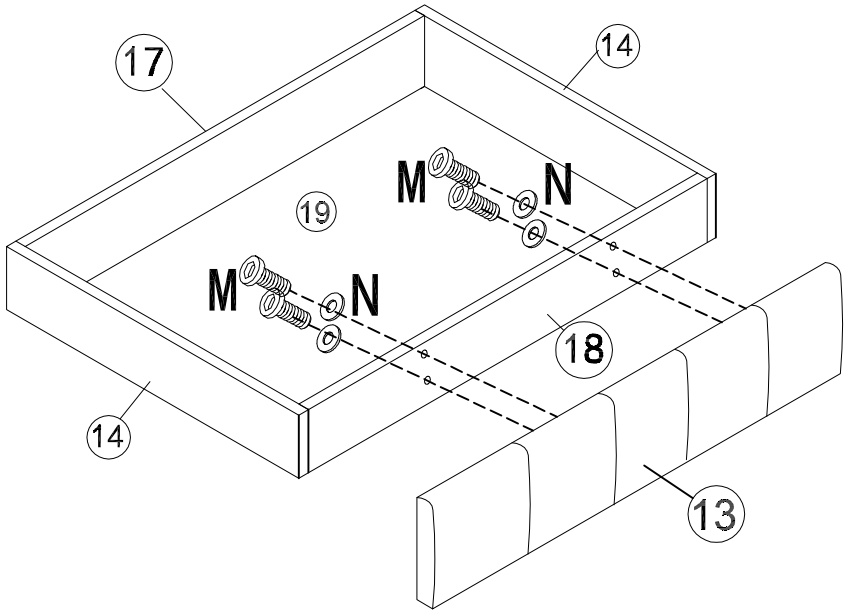

	M x 8PCS
	N x 8PCS

x2

STEP 12

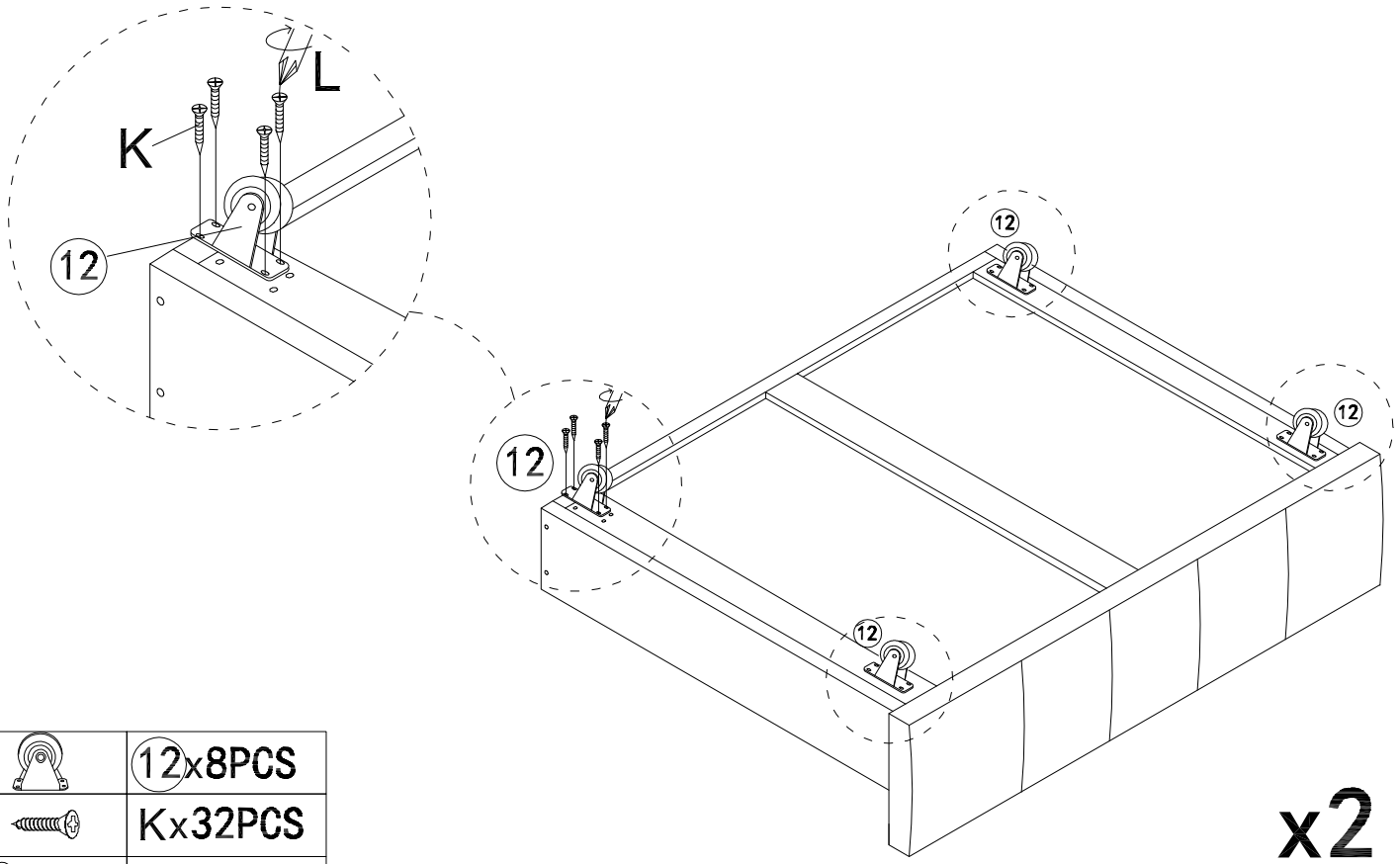

	12x8PCS
	Kx32PCS
	L x1PC

x2

STEP 13

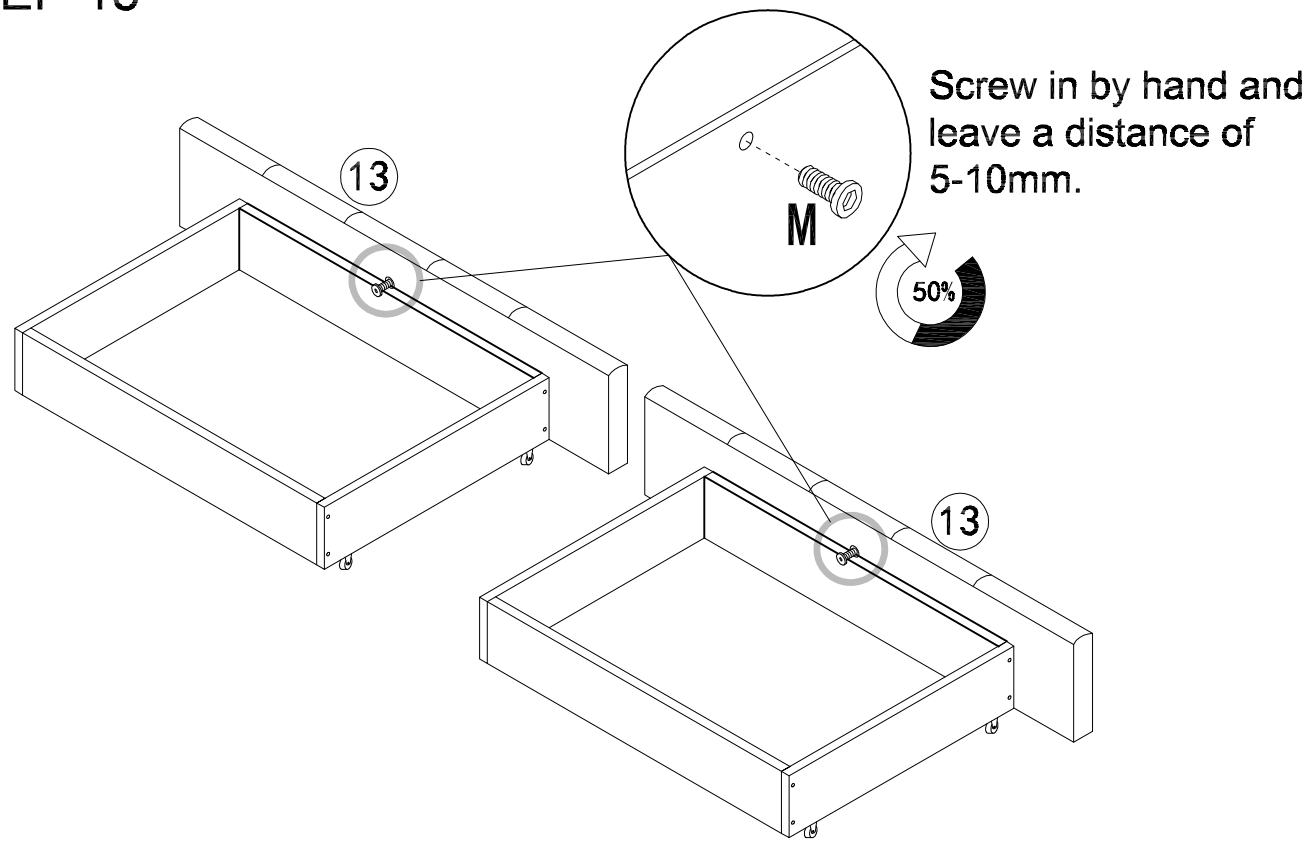

	M x2PCS

STEP 14

DRAWER ASSEMBLE COMPLETE

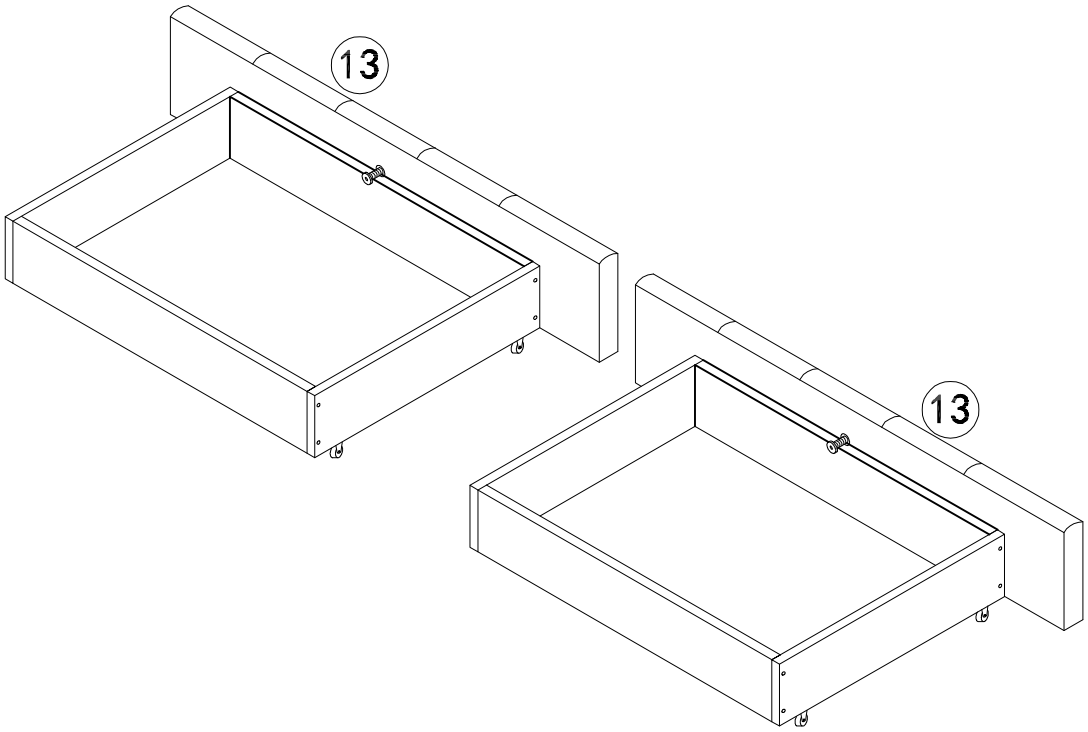

STEP 15

Drawer panel screw hang into side cross beam hole.

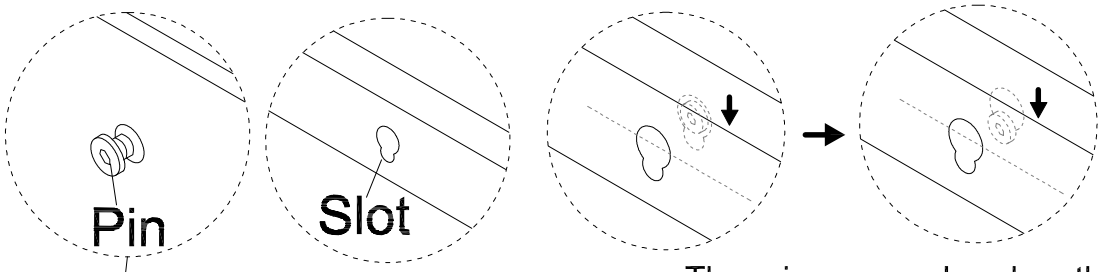

There is a screw head on the drawer board. Hang them in the hole as shown in the figure.

