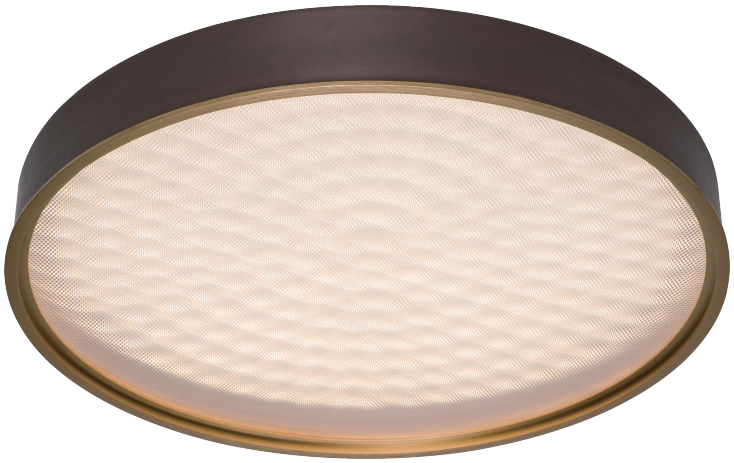

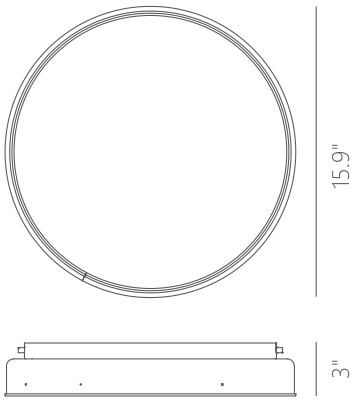

DETAILS

Material:
Aluminium Alloy

Lamp Shade:
Acrylic

Finishes:
DT - Deep Taupe

Color Temp.:	3000K
CRI (Ra):	≥90
LED Rated Life:	≈50,000 Hours
Dimming:	100%-10%

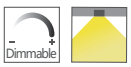

Dimmable with ELV or TRIAC Dimmer (Not Included)

Wattage:	25W
Voltage:	100~130V
Size:	15.9"Dia. x 3"H
Total Lumens:	3000
Delivered Lumens:	2100

Intertek