Scan the code for detailed Installation

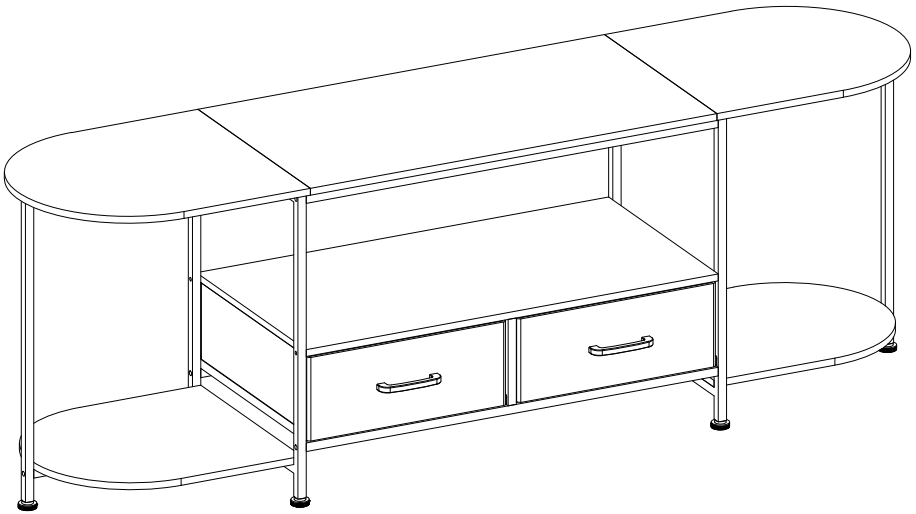

Disassembly Diagram

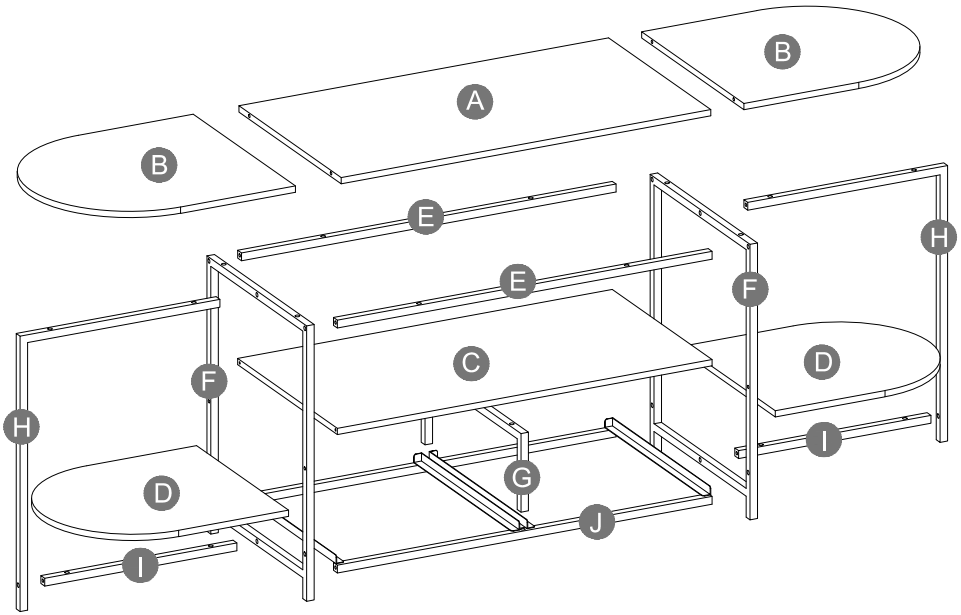

Accessories

A x1 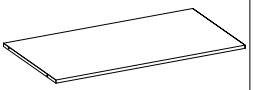	B x2 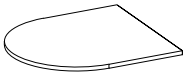	C x1 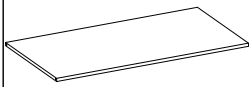	D x2 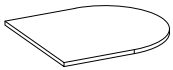
E x2 	F x2 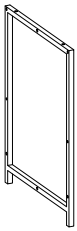	G x1 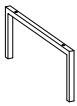	H x2 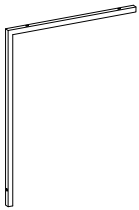
I x2 	J x1 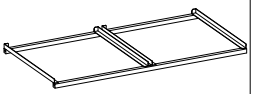	K x2 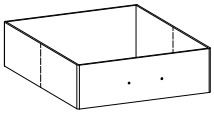	L x2 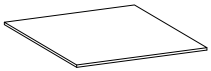

Accessories

1	2	3	4
x38	x 6	x4	x4
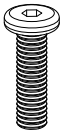		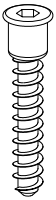	
M6x23 1 spare		M6x40 1 spare	Ø6x30 1 spare

5	6	7
x4	x2	x1
		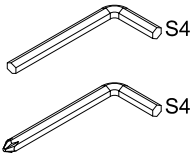 S4 S4
4x12		

Step 1

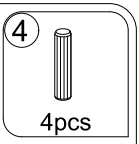

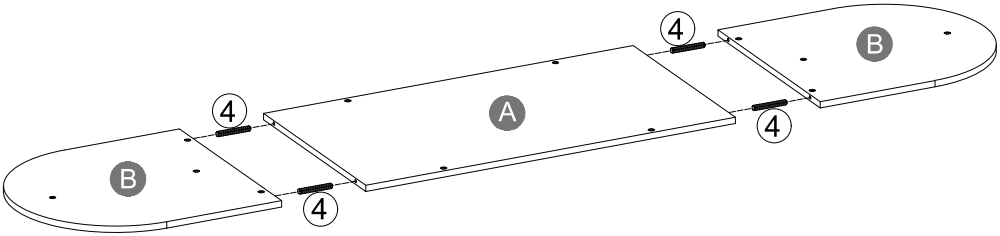

Step 2



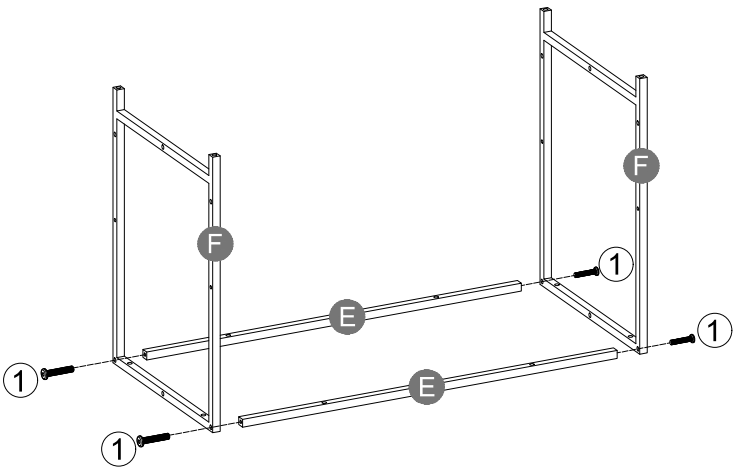

Step 3

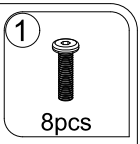

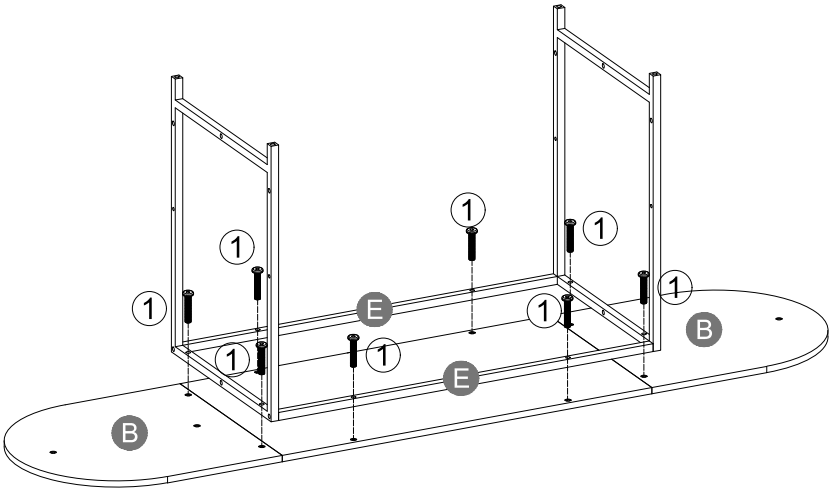

Step 4

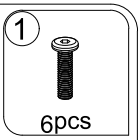

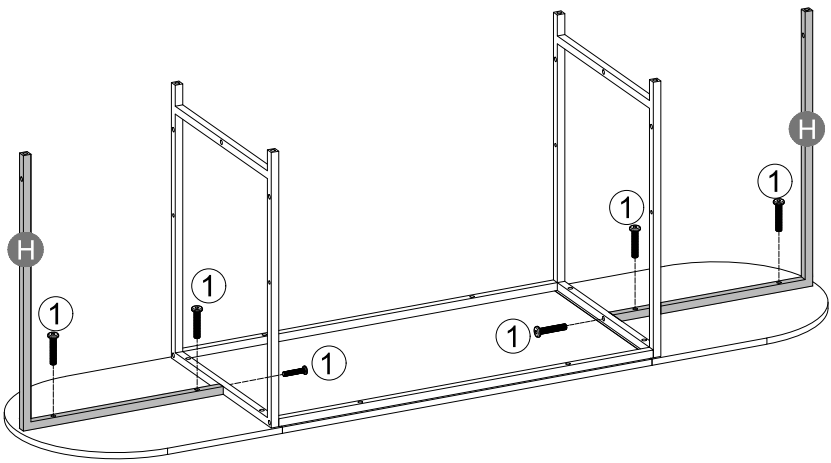

Step 5

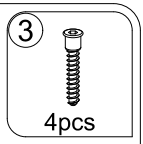

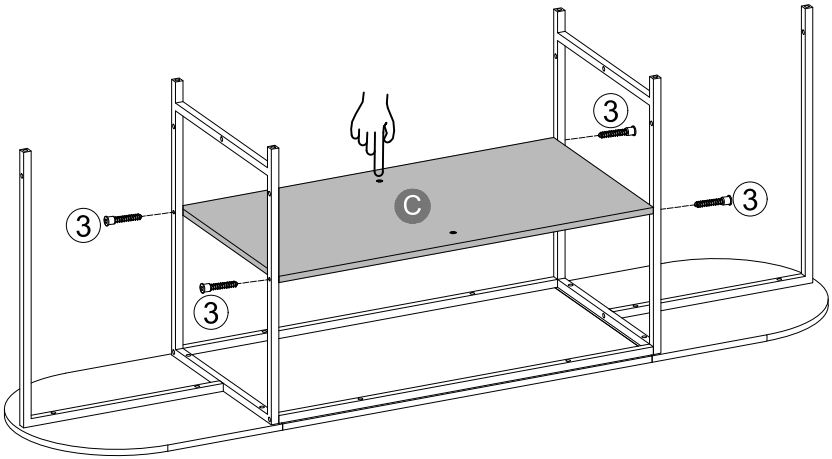

Step 6

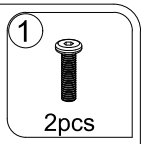

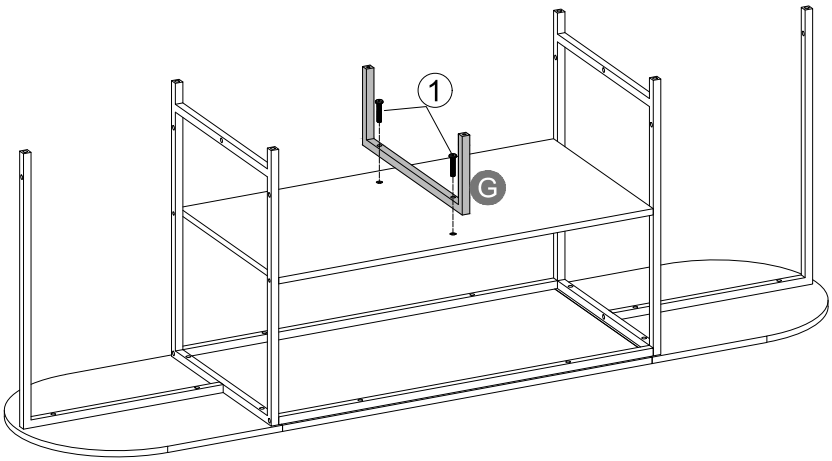

Step 7



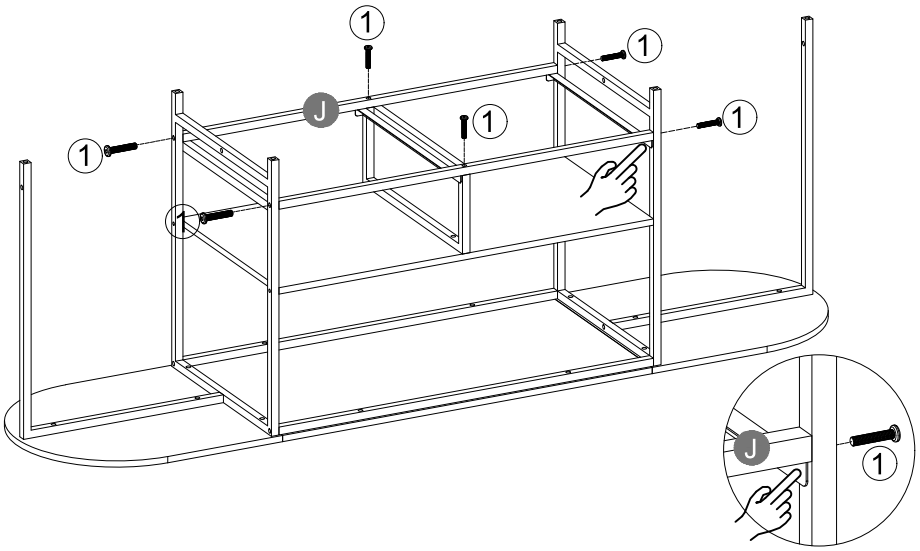

Step 8

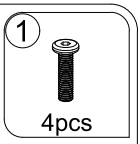

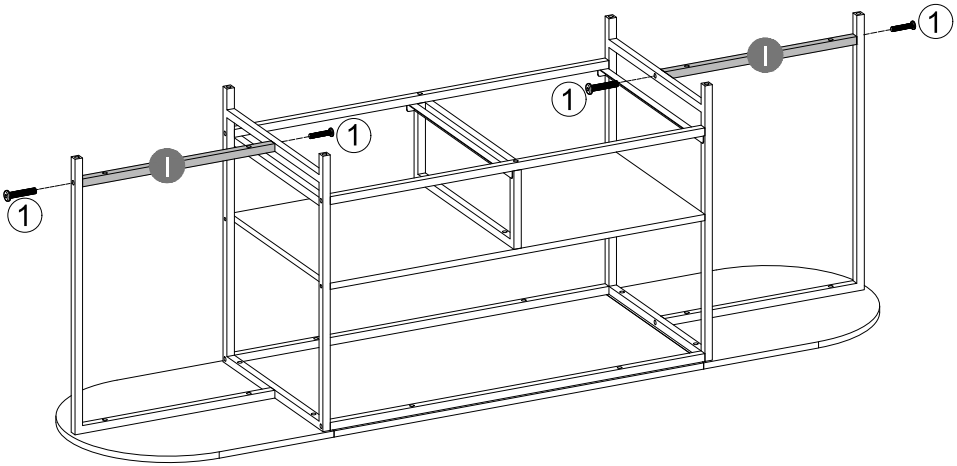

Step 9

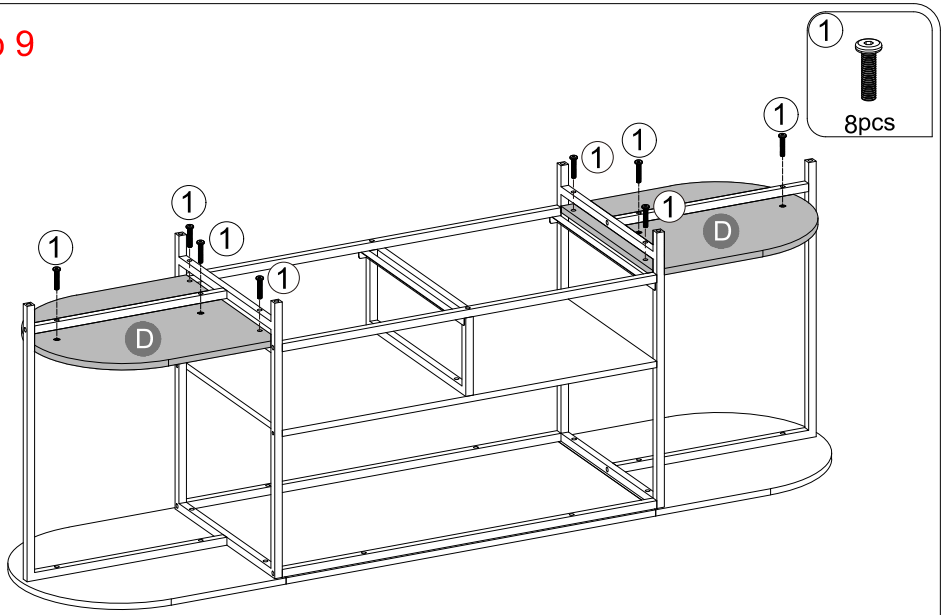

Step 10

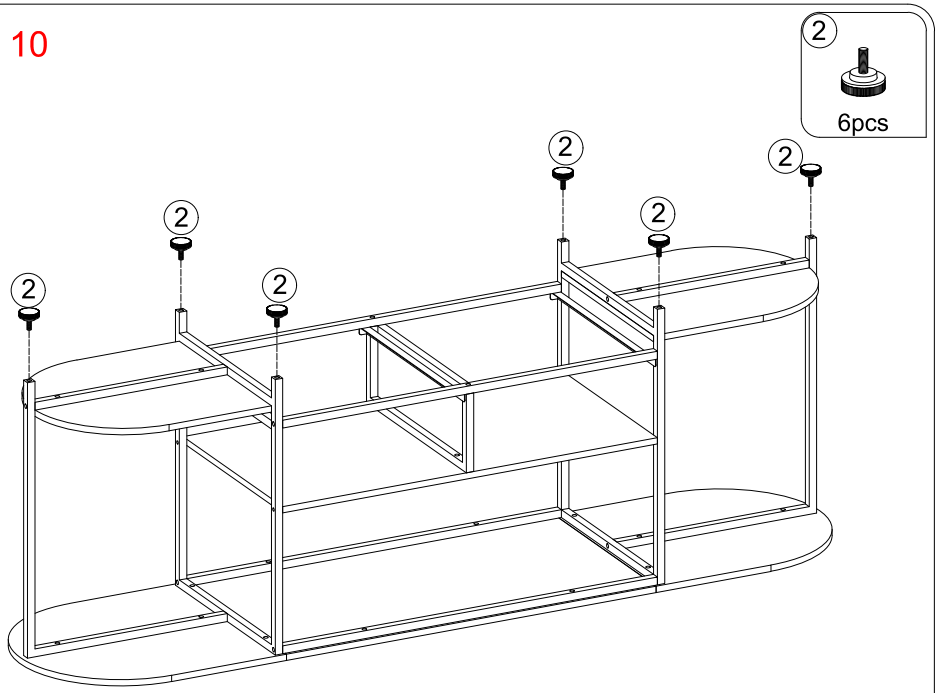

Step 11

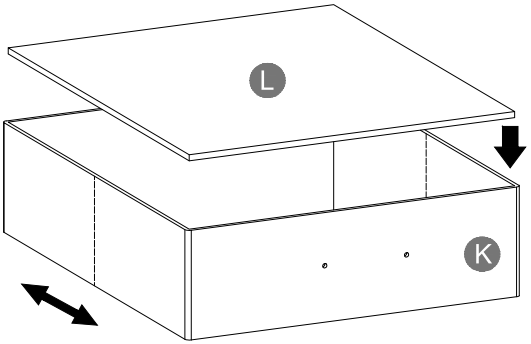

x2

Step 12

5
4pcs

6
2pcs

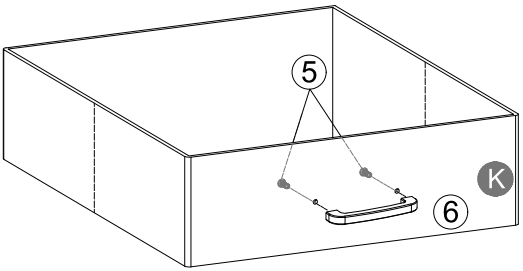

x2

Step 13

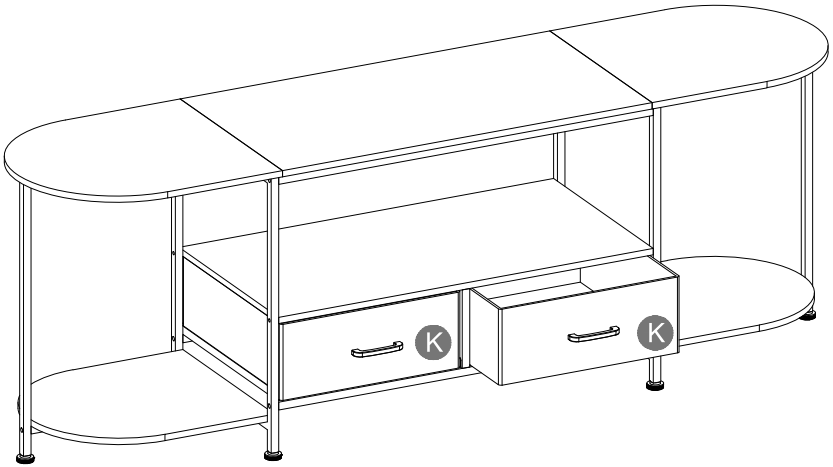

Step 14

