## NOTICE

*Please make sure that you have all parts indicated and they are in good condition before you begin assembly of this item. Refer to part list and hardware list below for guidance.
*This item should be assembled on a soft surface to prevent scratching the finish during assembly.
* This item may require periodic tightening.

Product Dimensions:26.4” W x 25.5” D x 30” H

## PREPARATION

*Before beginning assembly of product , make sure all parts are present . Compare parts with part contents list and hardware contents list.
*If any part is missing or damaged , do not attempt to assemble the product.
*Estimated Assembly Time: 10 minutes.
*Tolls Required for Assembly（included）: Allen Key

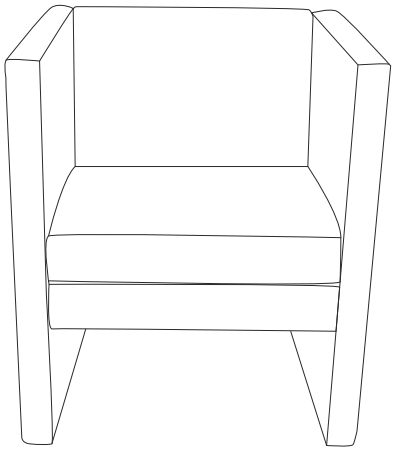

## CARE AND MAINTENANCE

*Spot clean using a mild water-free solvent.
* Only a professional cleaner should undertake a complete overall cleaning.
*The use of steam or water-based cleaners may cause excessive shrinking or staining.

### Part List and Hardware List

| PIECE | DESCRIPTION | PICTURE | QUANTITY |
|---|---|---|---|
| A | Back | | 1X |
| B | Seat Body | | 1X |
| C | Seat Cushion | | 1X |
| D | Left Arm | | 1X |
| E | Right Arm | | 1X |
| HW1 | Allen Bolt : M8 x1.25 x 50 mm | | 7X |
| HW2 | Spring Washer : M8 | | 7X |
| HW3 | Flat Washer : M8x22mm | | 7X |
| HW4 | Allen Key | | 1X |

## WARNING

Weight Capacity: 275 lbs

WARNING: DO NOT STAND ON CHAIR

WARNING: DO NOT OVER TORQUE BOLTS/SCREWS

# PREPARATION

*Before beginning assembly of product , make sure all parts are present . Compare parts with part contents list and hardware contents list.
*If any part is missing or damaged , do not attempt to assemble the product.
*Estimated Assembly Time: 10 minutes.
*Tolls Required for Assembly (included): Allen Key
*If you are having difficulty , our friendly Customer Care team is always here to help. Please email **customersupport@safavieh. com**

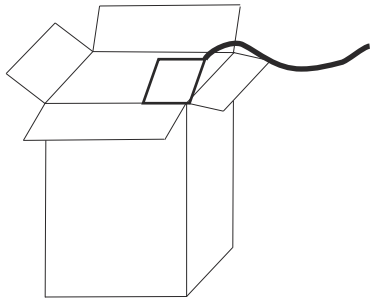

STEP1: TAKE OUT HARDWARE FROM THE SMALL BOX.

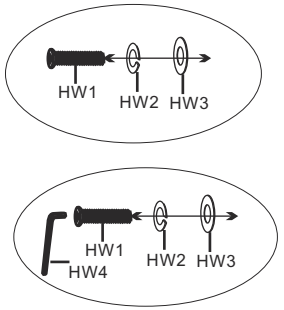


STEP 2: PUT THE WASHERS ON THE BOLT IN THE ORDER SHOWN AS THE PICTURE.

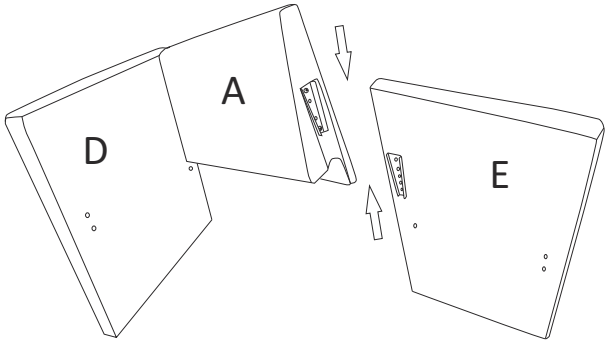


STEP 3: INSERT LEFT ARM (D) AND RIGHT ARM (E) ONTO BACK (A) AS PICTURE SHOWN.

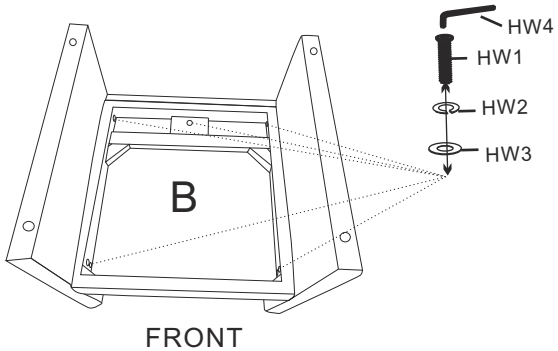


STEP 4:PALCE THE CHAIR UPSIDE DOWN, PUT SEAT BODY (B) ONTO THE CHAIR AND SCREW IN THE BOLTS . BUT DON'T TIGHTEN COMPLETELY.

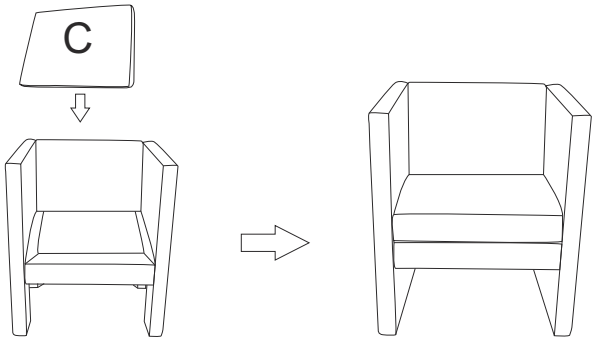


STEP 5: PUT THE CHAIR UPRIGHT AND MAKE SURE ALL LEGS ARE LEVEL, THEN FIRMLY TIGHTEN BOLTS WITH ALLEN KEY WHILE THE CHAIR IS UPRIGHT AS PICTURED ABOVE. THEN PUT THE SEAT CUSHION (C) ON SEAT.

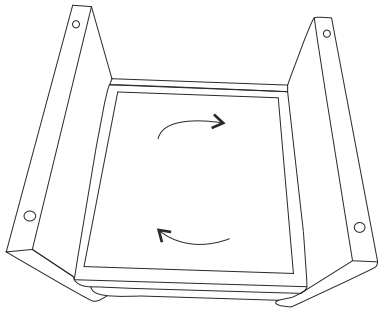

STEP 6: ZIP THE COVER ON BOTTOM OF SEAT. THIS ITEM MAY REQUIRE PERIODIC TIGHTENING.