TEAR SHEET

Jodo 19" Single Sconce

Item # WS 2020BZ/HAB-WG



Designer: Windsor Smith

Height: 18.75"
Width: 6.75"
Extension: 6.5"
Backplate: 3.5" x 5.5" Rectangle
Finishes: BZ/HAB, HAB, PN
Glass Options: WG
Lightsource: Dedicated LED
Wattage: 6w (700lm)
Weight: 3 Pounds
Note: Requires Smaller Outlet Box

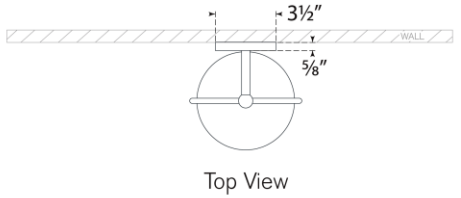

Top View

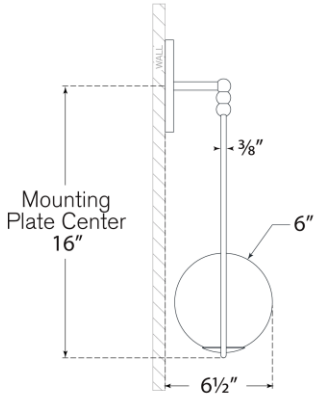

Side View

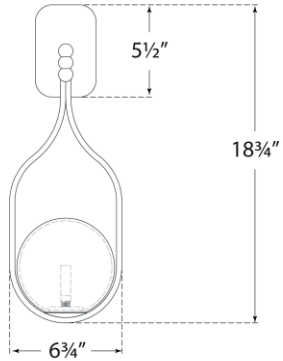

Front View

VISUAL COMFORT & CO.

DAMP LED 4