INSTALLATION INSTRUCTION

LANDSCAPE

E-LS-012402-16

East Grove
• HOME •

WARNING

IMPORTANT: NEVER attempt to do any work without shutting off the electricity.

1. Read all instructions before installing.
2. System is intended for installation by a qualified electrician in accordance with the National Electrical Code and local regulations.
3. Place the wall switch in the "OFF" position.
4. Go to the main fuse box, or circuit breaker. Unscrew the fuse(s) or switch "OFF" the circuit breaker switch(es) that control the power to the space that you are working on.

CAUTION

- All parts must be used as indicated in these instructions. Do not substitute any parts, leave parts out, or use any parts that are worn out or broken. Failure to follow this instruction may invalidate the UL listing of this fixture.

AVERTISSEMENT

IMPORTANT : Coupez l'électricité avant TOUTE manipulation.

- Lisez toutes les instructions avant d'installer.
- Système est destiné à être installé par un électricien qualifié en conformité avec le code national de l'électricité et les règlements locaux.
- Placez l'interrupteur mural en position d'arrêt (« OFF »).
- Toujours mettre le fusible ou le disjoncteur en position arrêt dans la pièce ou des travaux électriques sont prévus

MISE EN GARDE

- Toutes les pièces doivent être utilisées tel qu'il est indiqué dans ces instructions. Ne remplacez pas les pièces, n'en laissez pas de côté et ne les utilisez pas si elles sont usées ou brisées. Le non-respect de ces instructions peut annuler l'homologation UL du luminaire.

ADVERTENCIA

IMPORTANTE: NUNCA intente hacer trabajos sin desconectar el suministro eléctrico.

- Lea y comprenda todas las instrucciones e ilustraciones por completo antes de proceder con el ensamblaje e instalación de esta lámpara.
- Sistema está disenado para ser instalado por un electricista calificado, de acuerdo con el código eléctrico nacional y las normas locales.
- Coloque el interruptor de la pared en la posición "OFF" (APAGADO).
- Diríjase a la caja de fusibles o a la caja del interruptor de circuito principal en su hogar. Coloque el interruptor de alimentación principal en la posición "OFF" (APAGADO).

PRECAUCIÓN

- Todas las piezas deben usarse como lo indican estas instrucciones. No reemplace las piezas, noomita piezas durante la instalación ni utilice piezas gastadas o rotas. El incumplimiento de esta indicación podría invalidar la calificación UL esta lámpara.

HARDWARE

Mounting Stake
Qty: 1pcs

Outdoor Rated Wire Nut
Qty: 2pcs

EastGroveHome.com
Phone: 888-602-0990

Corporate Headquarters
1000 N West Street, Suite 1200
Wilmington, DE 19801

*Corporate Address ONLY – Do not send returns here

INSTALLATION INSTRUCTION
LANDSCAPE
E-LS-012402-16

East Grove
• HOME •

Step 1: Installing the MR16 bulb(Fig.1)

*Note: MR16 bulb is required to the fixture.
(MR16 bulb sold separately)

1. Remove the fixture from the package,turn right and pull out the hood.
2. Plug the MR16 bulb into the bulb holder adapter.
3. After installing the MR16 bulb, restore the hood to its original position on the fixture.

Step 2: Determining the location(Fig.2 \ Fig.3)

1. Make sure your main power is off.
2. At the point of installation, mount the stake by placing a piece of wood on the stake and hammering the wood. Hammer untill the bottom of the stake flange is flush with the ground.
3. In the case of hard soil, dig a hole and place the stake in so that the bottom of the stake flange is flush with the ground. Fill the rest of the hole with the removed soil and pack it tight to secure the stake.
4. Screw the fixture onto the stake provided, leading the wire from the fixture through the wire slot in the stake.

Step 3: Wiring the Fixture(Fig.4)

*Note: Low voltage Transformer is required to power the fixture.
(sold separately)

1. Cut the power supply wire from the transformer at the location of the fixture.
2. Separate the power supply wire into two individual wires by lightly pulling on each side so that a couple inches is separated.
3. Strip off ½ inch of the insulating material from each wire and connect one to each of the wires from the fixture using the outdoor rated wire nuts provided.
   NOTE: To install multiple fixtures, also connect the power supply wire of each additional fixture to the connection described in Step 3 of the previous fixture.

Step 4: Installing the Fixture(Fig.5)

1. Screw the fixture onto the stake provided, leading the wire from the fixture through the wire slot in the stake.
2. If desired, bury your wire by digging a small trench. When finish burying the wires, close the trench.
3. Repeat steps for other fixtures in the same electrical circuit.
4. Turn the main power supply back on and make sure the fixtures light up.

Step 5: Aiming the Fixture(Fig.6)

1. Tilting: Loosen the joint screw and adjust the head of the fixture to the desired direction before retightening the screw.
2. Rotating: Loosen the mounting nut and rotate the fixture to the desired position before retightening the mounting nut.

NOTE:In the subsequent use process, when the light bulb is burned out, you can press "Step 1" to replace the new light bulb.

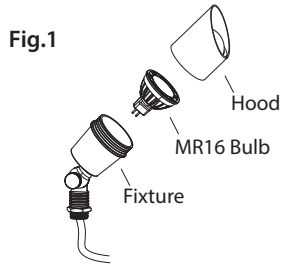

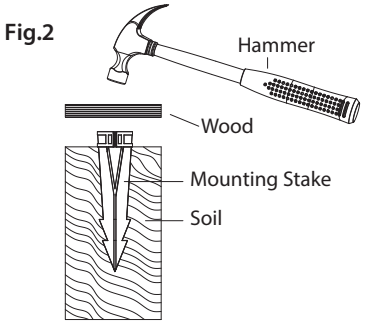

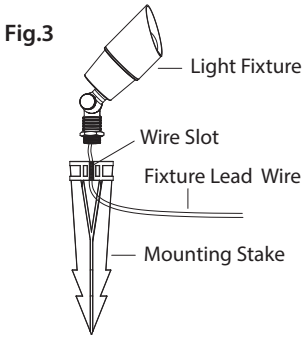

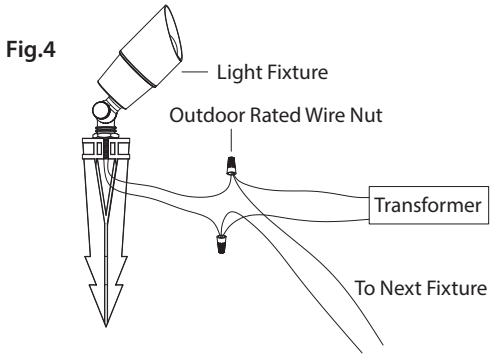

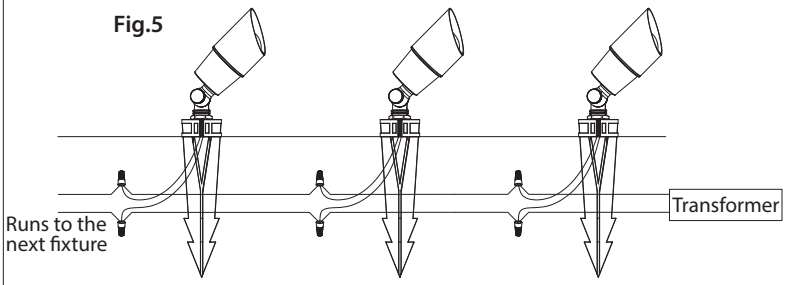

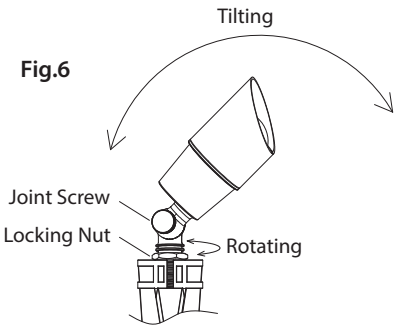

EastGroveHome.com
Phone: 888-602-0990

Corporate Headquarters
1000 N West Street, Suite 1200
Wilmington, DE 19801

*Corporate Address ONLY – Do not send returns here