Solid Wood Mantel

CAUTION:
Please make sure there are no wires and pipes around the drill holes before marking.
Please select the appropriate fasteners, if the supplied screws do not fit your wall.
Please ensure the weight being mounted does not exceed the max load of the wall.

PART LIST AND ASSEMBLY ILLUSTRATION

NO	A	B	C	D	E	F
COMPONENI						
QUANTITY	1	1	1	8	8	2

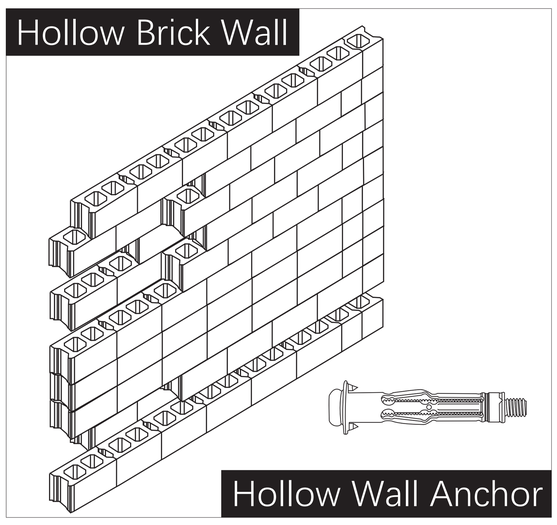

Please use hollow wall anchors (not included) for installation on hollow brick wall.

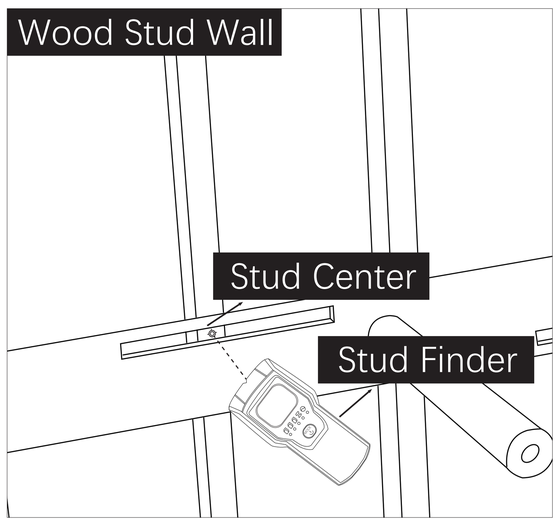

Please make sure the stud locations by stud finder first.It's recommended to drill holes in stud center.

Step 1

Attach the level to the mounting bracket to make sure of the proper position. Use a pencil to mark holes for drilling. (Recommended the longer mantel, the more screws to be installed)

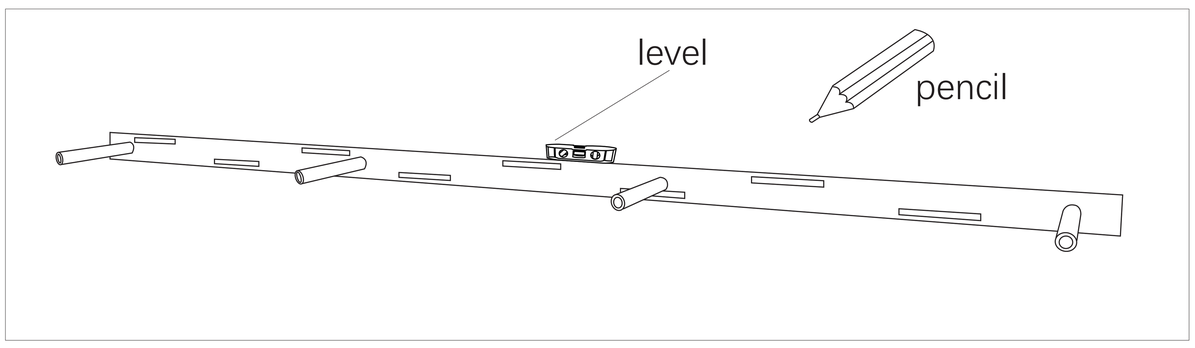

Step 2

Drill holes according to the marks. Fix the mounting bracket to the wall with wall anchor kit.(part D & part E)
Drill bit diameter: 5/16-in
Pre-drilled hole dimensions: 5/16-in * 4 in

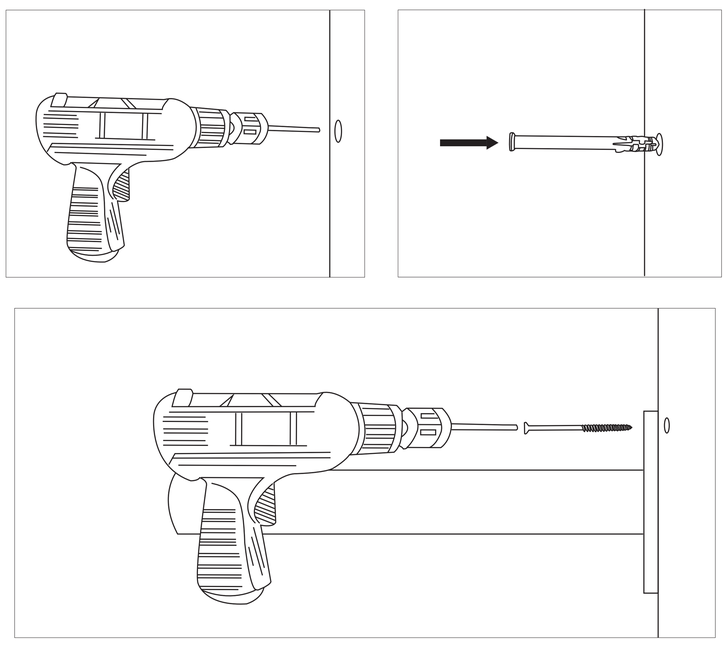

Step 3

Place the shelf on the mounting bracket.Fix the mantel to the bracket with screws (part F) from below.

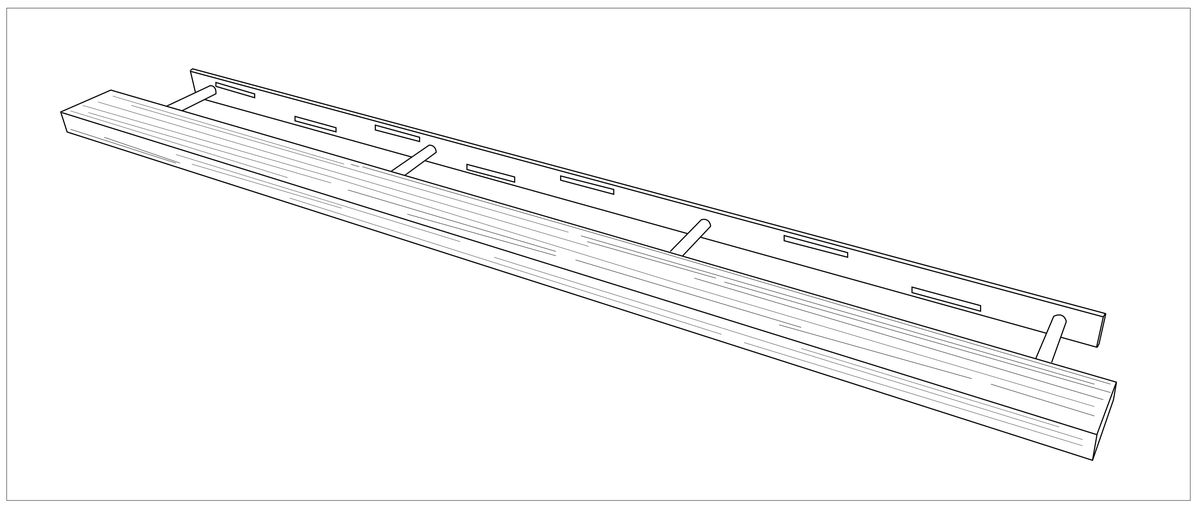

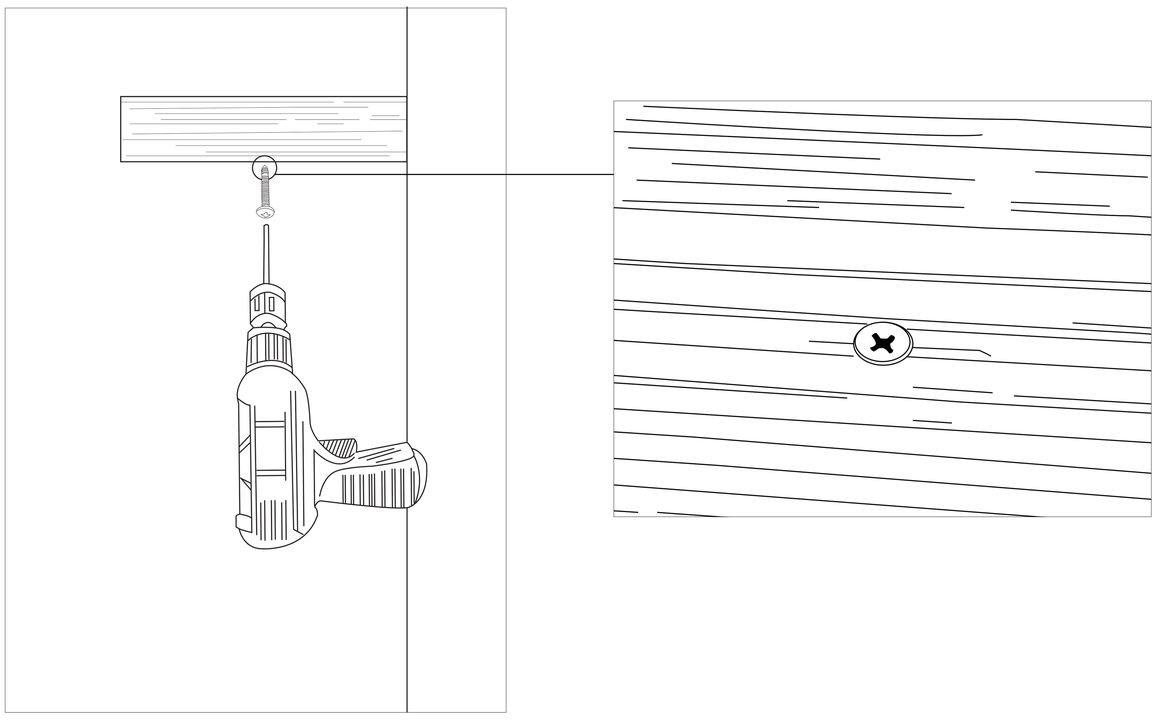

Bring ideal decor and storage to your space!

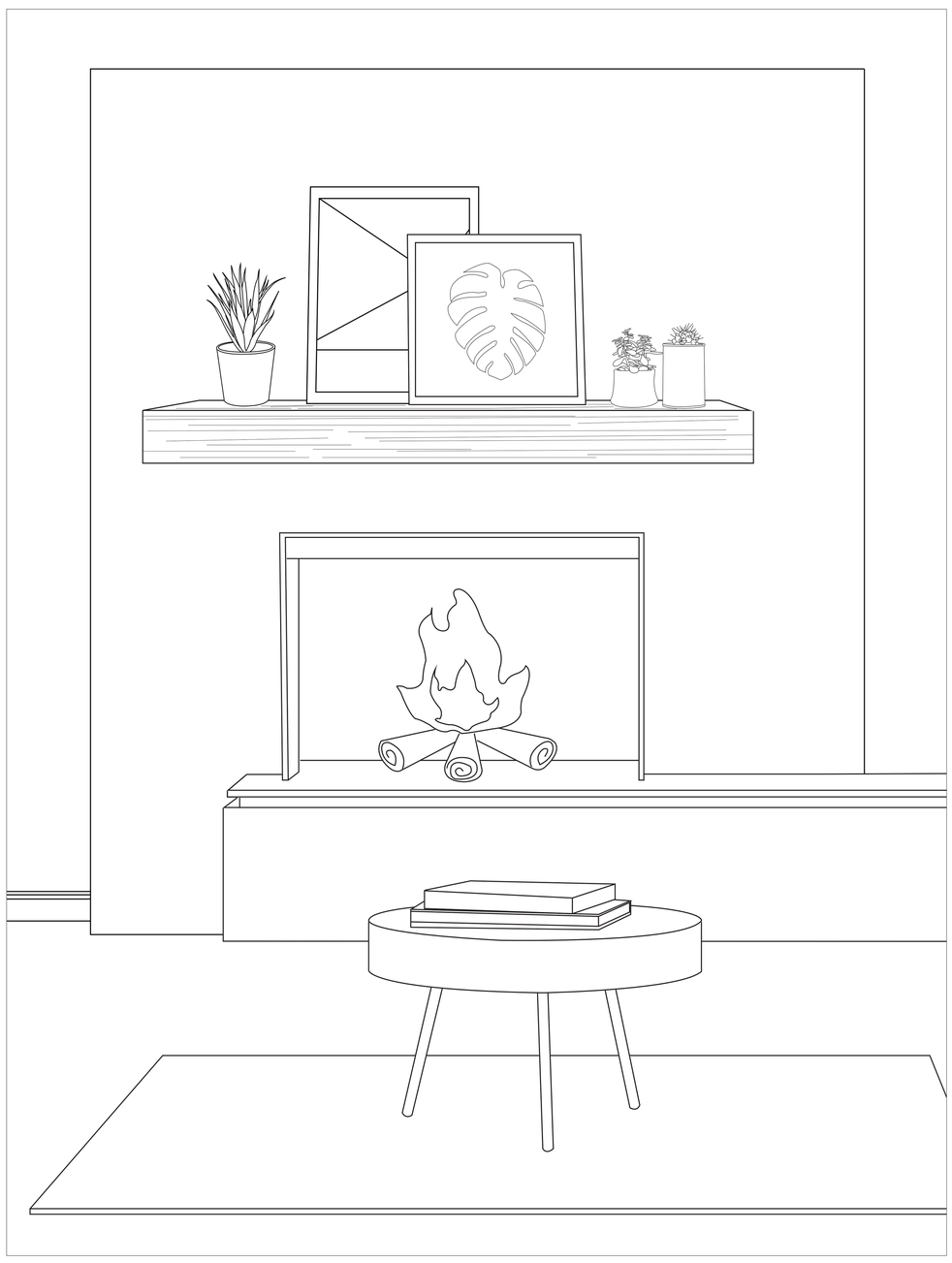

Note:
If the item arrived damaged, missing parts, too dificult to install or just you don't like it,please contact us freely. We are always ready to service you and help you.