AEAD30: DOUBLE ACCESS DOORS, 30"

HESTAN

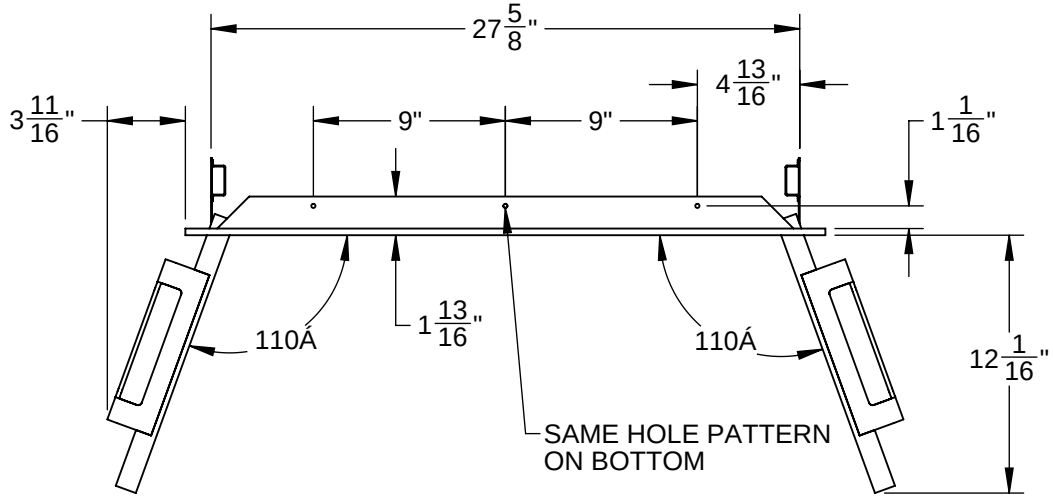

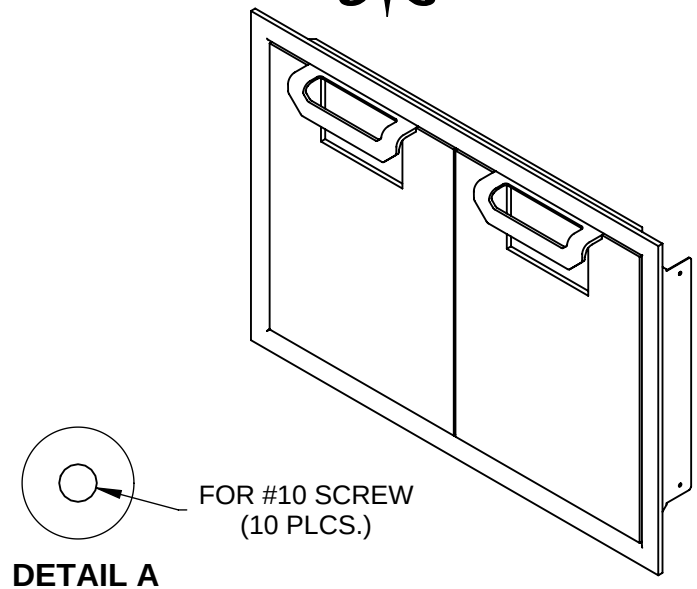

DETAIL A
SCALE 1 : 1

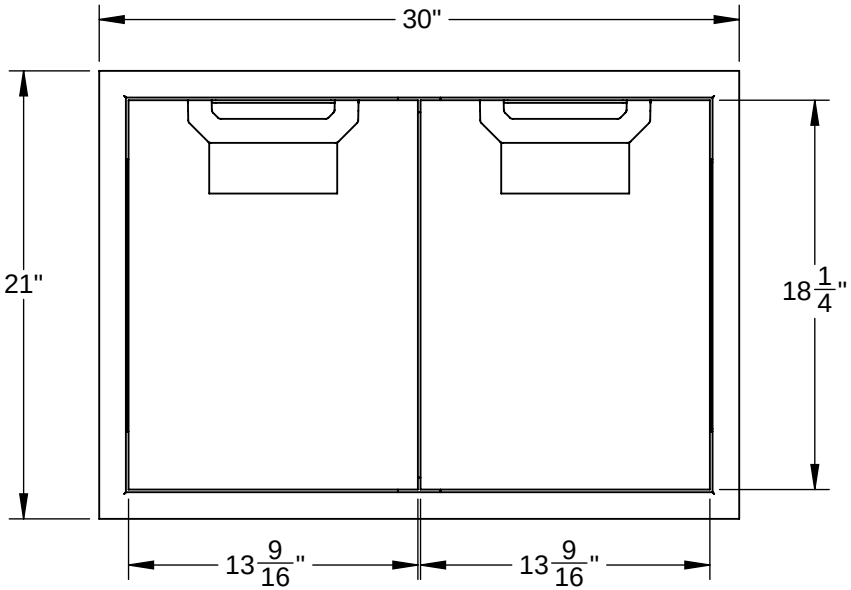

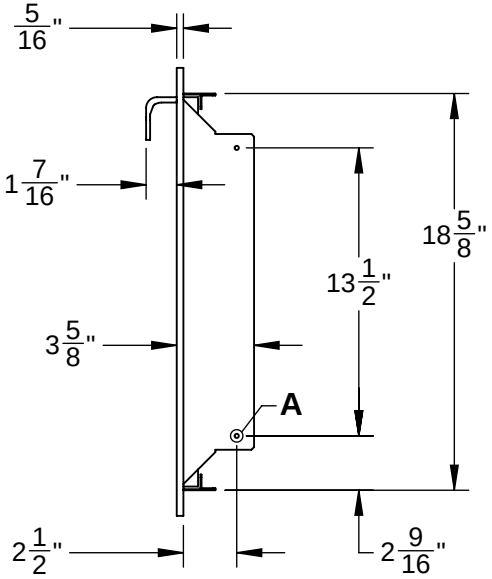

CUTOUT DIMENSIONS:
19" H - 27 7/8" W

Revised: 09/12/2018