Escape Dining 78-2 Production 12-28-23
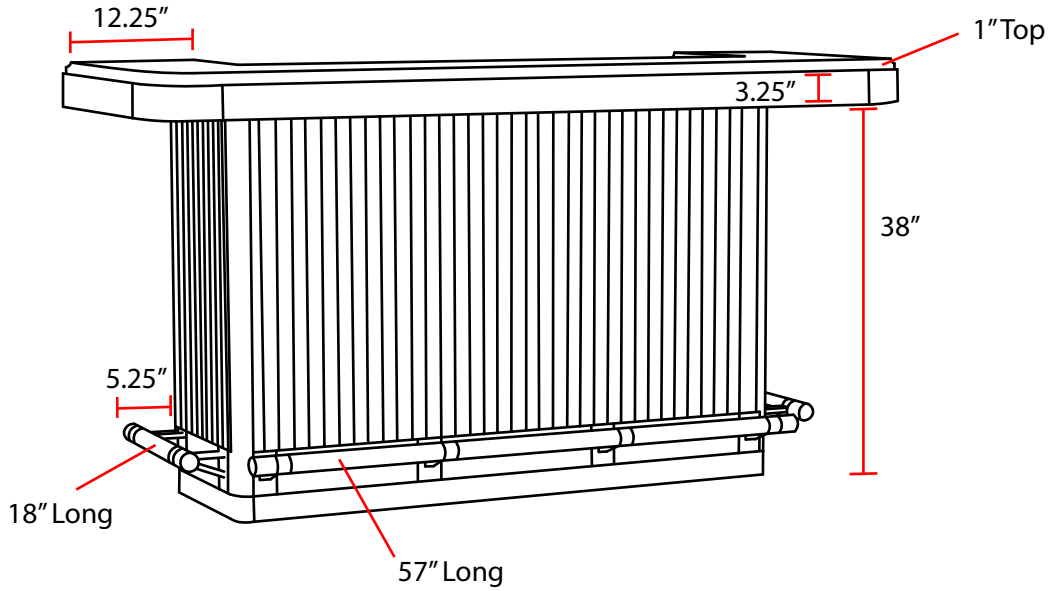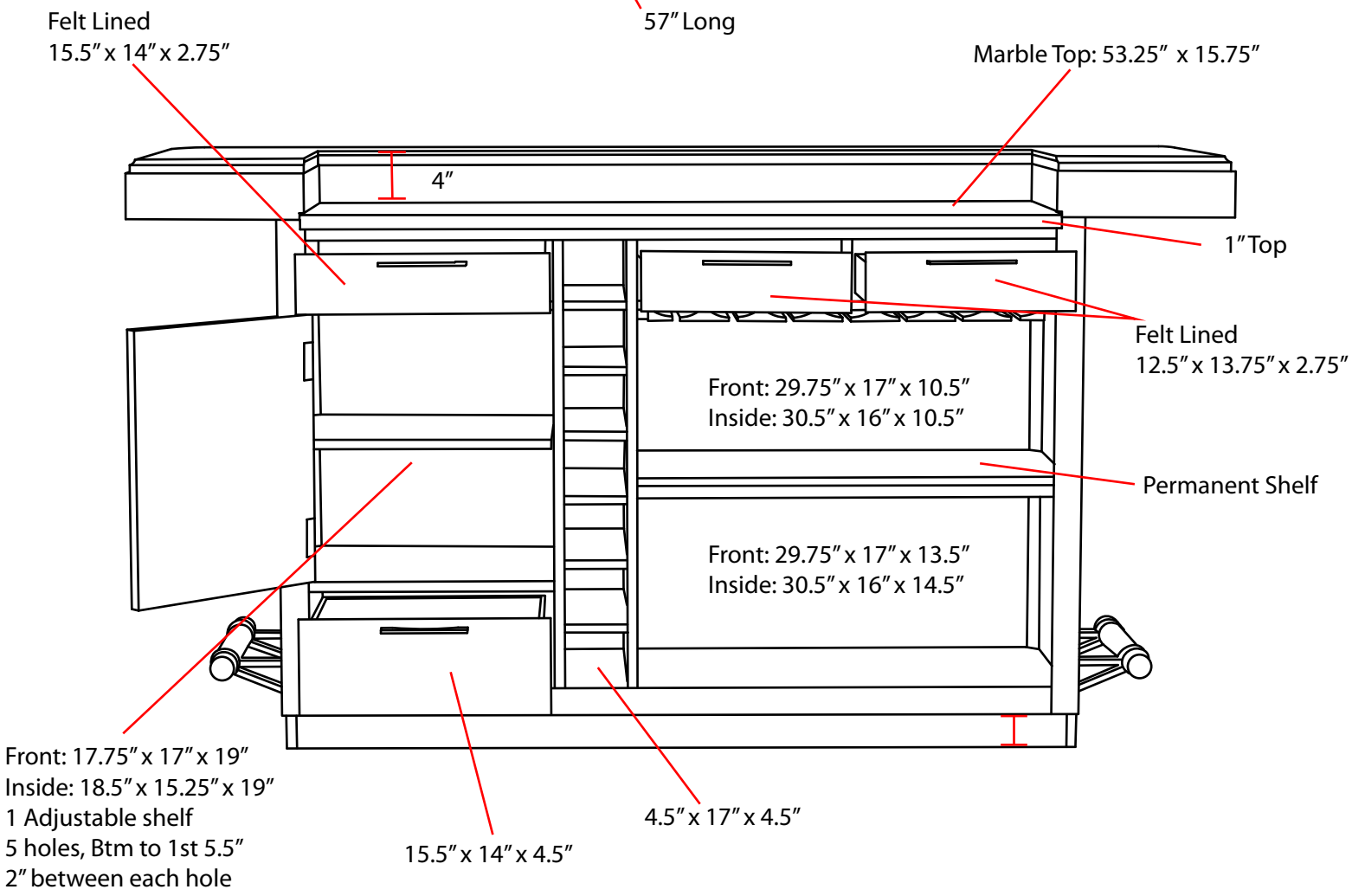
Overall: 78″ x 29″ x 42.75″