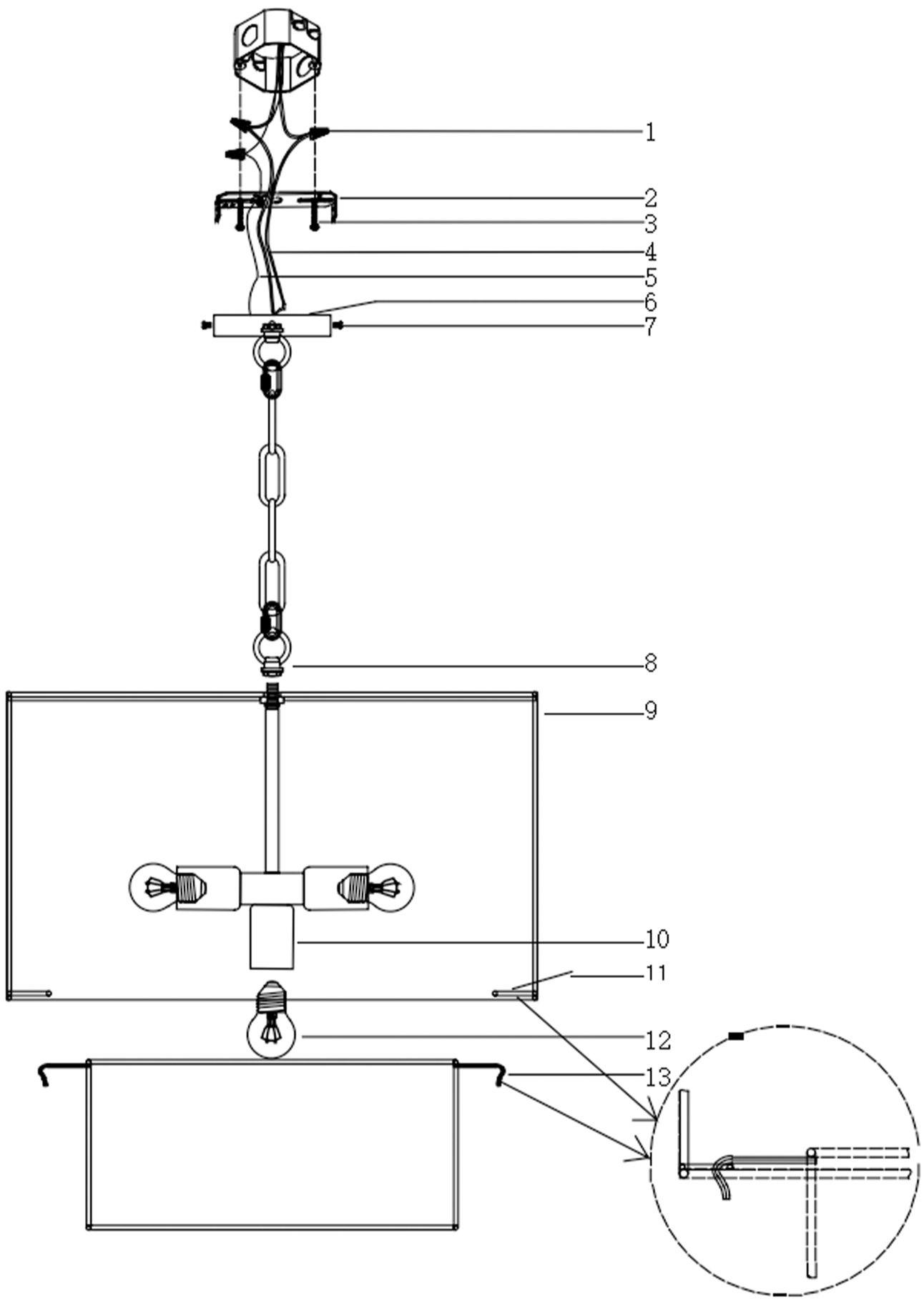

Installation Steps:

Step 1: Fix the mounting plate (2) to the junction box with screws (3).
Step 2: Pass the power cord from the lamp frame (9) through the hanging ring (8) and tighten it, then pass it through the straight edge basin (6).
Step 3: Connect the lamp body power cable (4) to the external power cable with a wiring cap (1), secure the ground cable (5) with a green ground screw, and then connect the wiring cap (1) to the external ground cable.
Step 4: Fix the straight edge basin (6) to the mounting plate (2) with screws (7).
Step 5: Install the bulb (not included)(12) on the lamp holder (10).
Step 6: Fasten the light holder (13) to the light holder (11).

Accessories:

2: Mounting Plate*1	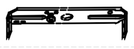
3: Mounting Screw*2	
7: Mounting Screw*2	
1: Wiring cap*3	

Notice: This light fixture should be installed in accordance with all applicable, local installation codes, and by a person familiar with the construction and operation of it, as well as the hazards involved. Inspect items and contents carefully. If any damage or defect is found, do not install it.