ESK138Z_V1.0

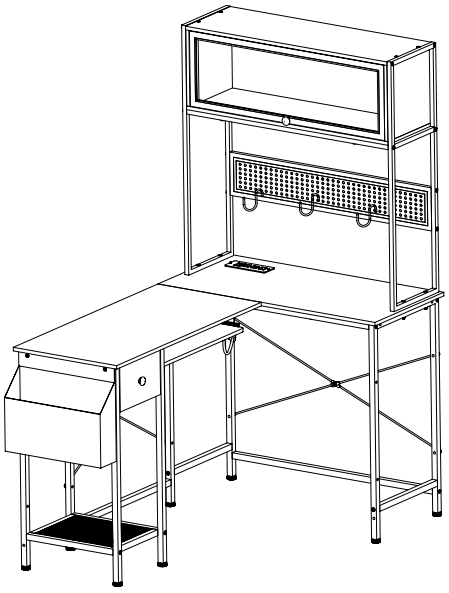

Step 1 —— Step 28

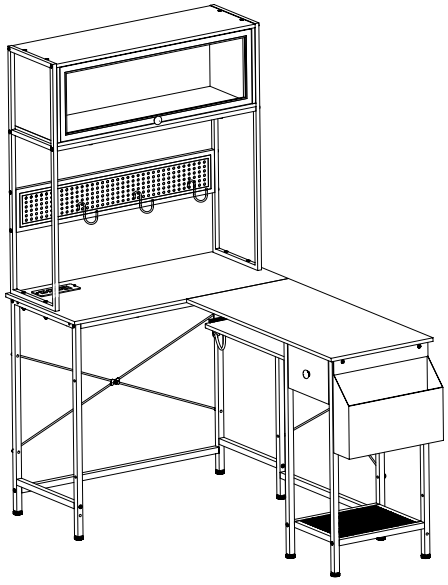

Step 1 —— Step 11
Step 29 —— Step 45

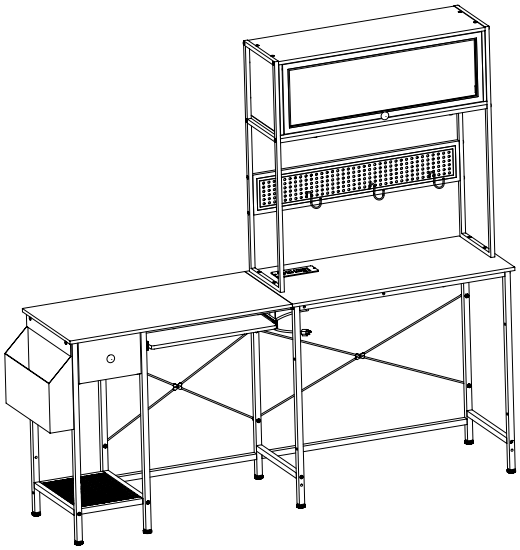

Step 1 —— Step 11
Step 46 —— Step 63

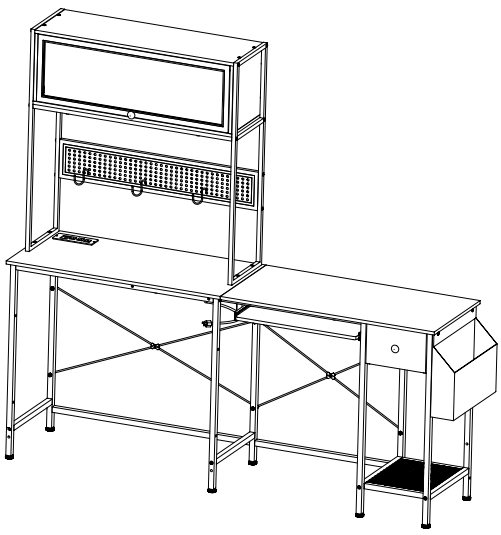

Step 1 —— Step 11
Step 64 —— Step 81

IMPORTANT INFORMATION
READ CAREFULLY.
KEEP THIS INFORMATION FOR FURTHER REFERENCE.

GENERAL GUIDELINES

- Please read the following instruction carefully and use the product accordingly.
- Please keep this manual and hand it over when you transfer the product.
- This summary may not include every detail of all variations and considered steps. Please contact us when further information and help are needed.

NOTES

- Please follow the assembly instructions precisely and only use the product as intended.
- If an odor is present when first opening the package, please leave the unwrapped product in a shaded and ventilated area for a few days to air out.
- Prior to assembly, please check the product for defects or missing accessories. If any defects are found or accessories are missing, do not use product as damage or injury may occur;
  Please contact us for assistance and replacement.
- During assembly, please only slightly tighten all screws in their correct position first, then fully tighten them. A Philips screwdriver is recommended but not included.
- It is suggested you regularly check the products bolts and connections to ensure safe use.
- Assemble the item on a soft flat and clean surface to avoid scratches and damage.
- It is recommended that two people assemble this product.

WARNINGS

- During assembly, keep parts and packaging materials away from children and pets as there could cause injury and are a potential choking hazard.
- Avoid sharp objects or corrosive chemicals to prevent damage to the product.
- Please open the item slowly and cautiously to avoid pinching your hands by metal joints, especially children.

ANTI-TIP WARNING

- Serious or fatal crushing injuries can occur from furniture tip-over. To prevent this furniture from tipping over it must be permanently fixed to the wall.
- Since different wall materials require different types of fixing device, for advice on suitable fixing systems, contact your local specialized dealer.

Tools Needed

(not included)

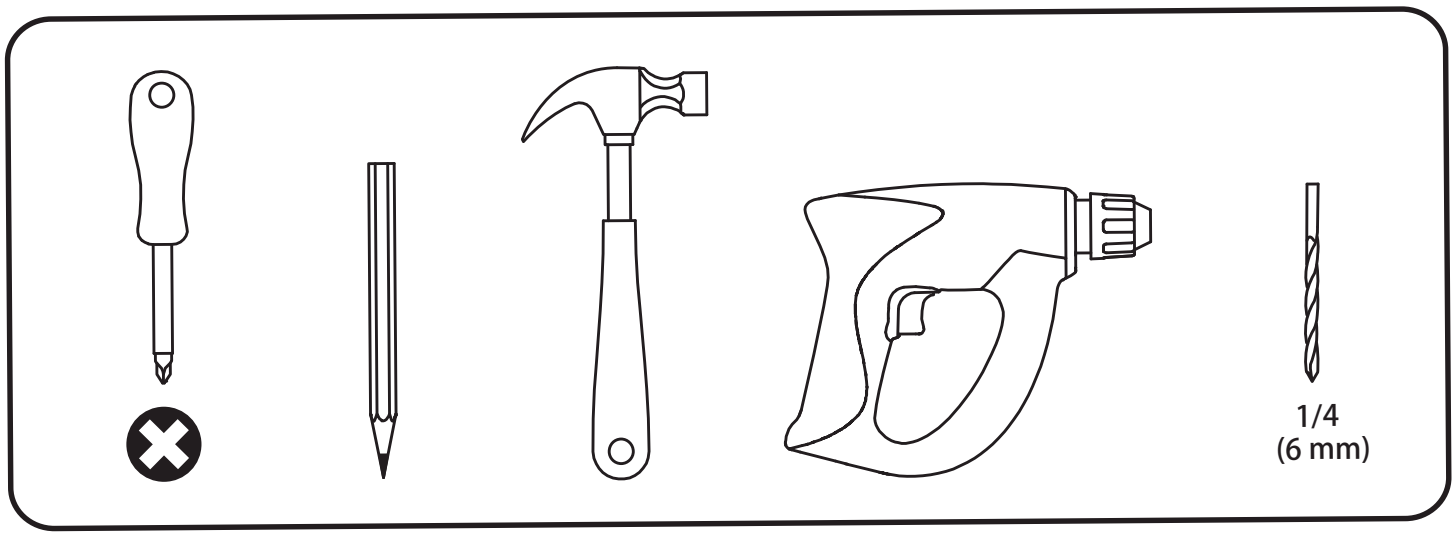

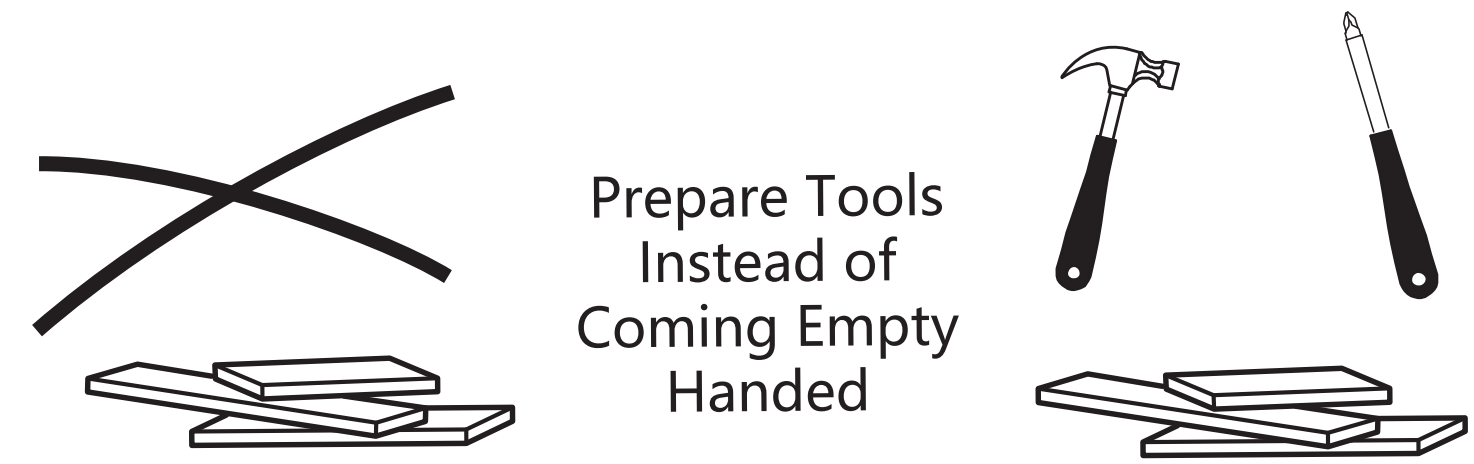

Prepare Tools Instead of Coming Empty Handed

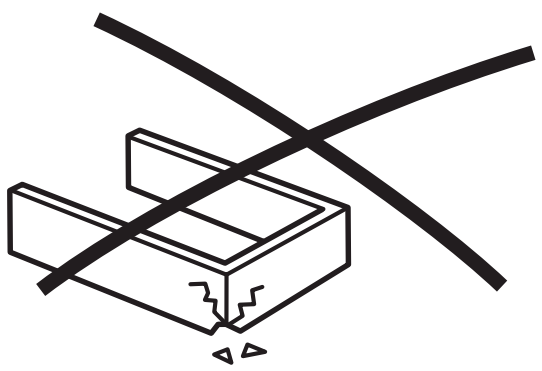

Handle Gently

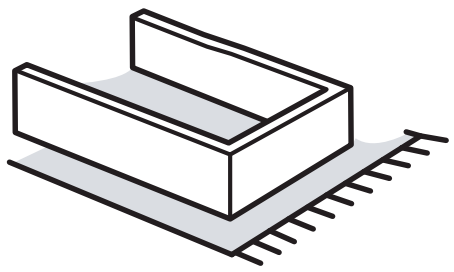

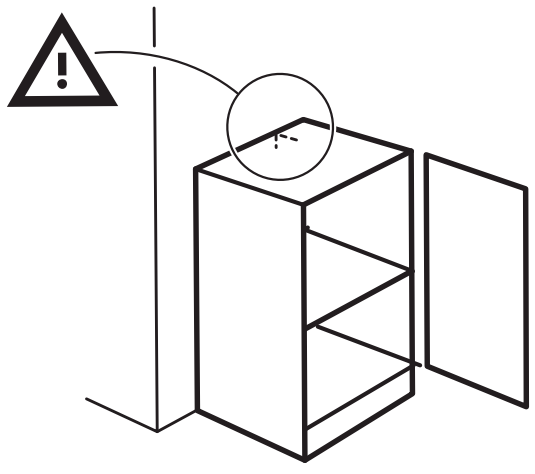

Gently Push Against the Wall and Do Not Tip Over

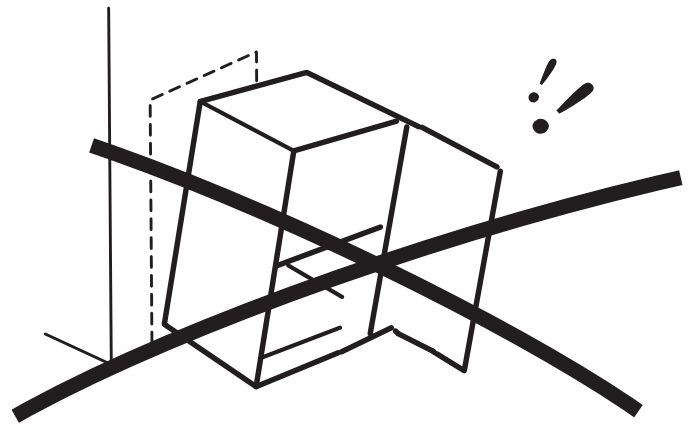

Tips:

- If you have any futher questions, please feel free to contact us, We will reply ASAP .
- Before installation, please make sure you have all the hardware, the serial numbers are properly labeled corresponging to the list, and the quantity is correct.
- Enjoy your new purchase!

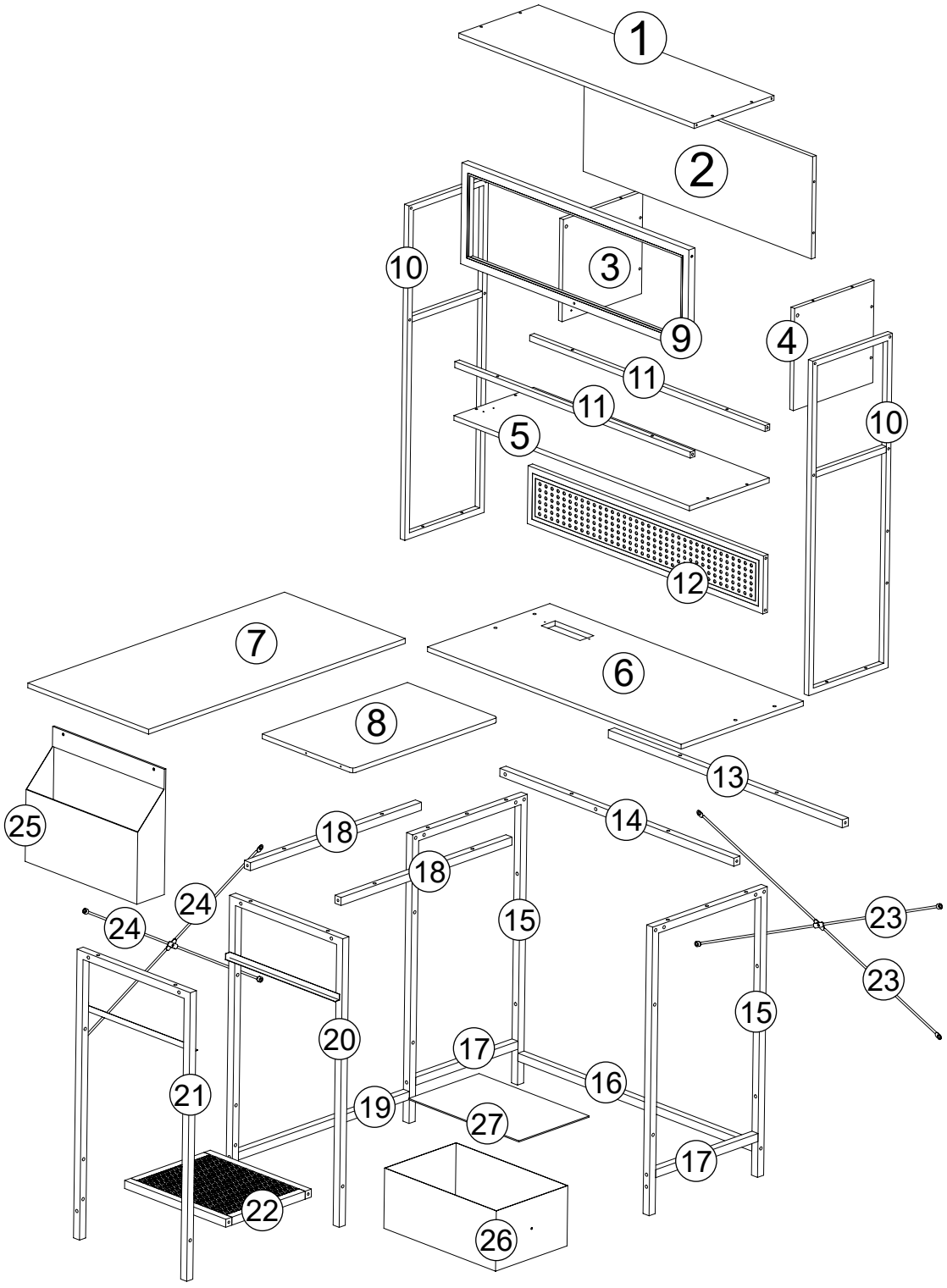
1
2
3
4
5
6
7
8
9
10
10
11
11
12
13
14
15
15
16
17
17
18
18
19
20
21
22
23
23
24
24
25
26
27

1
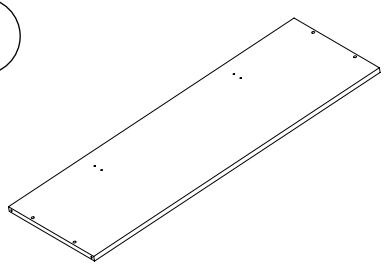

2
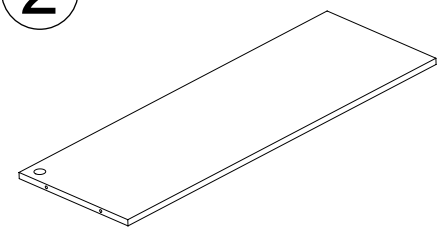

3
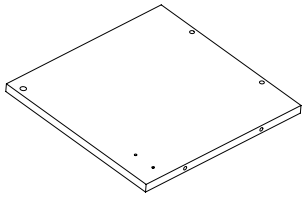

4
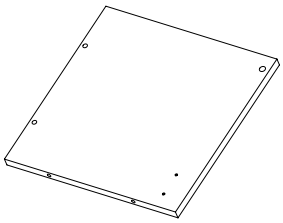

5
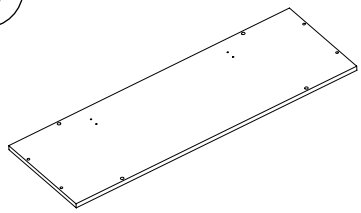

6
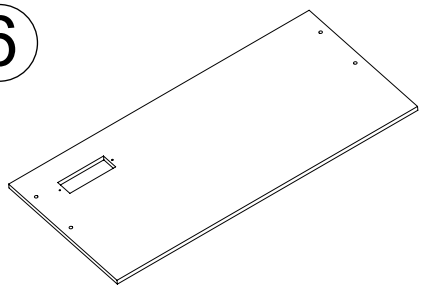

7
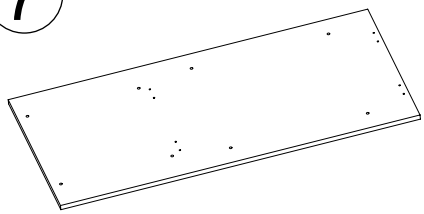

8
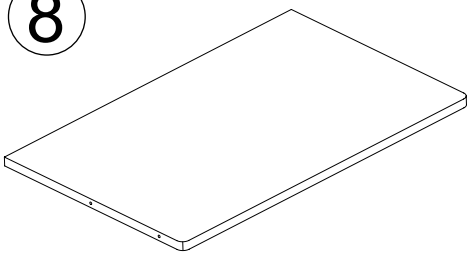

9
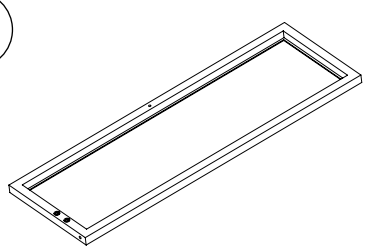

10
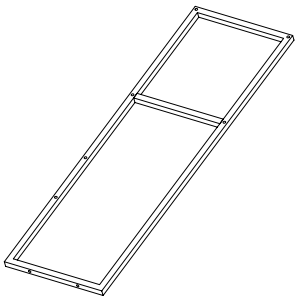
x 2

11
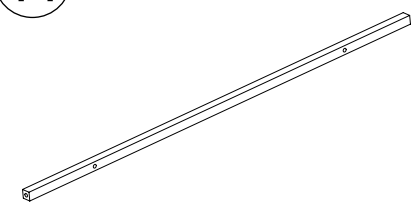
x 2

12
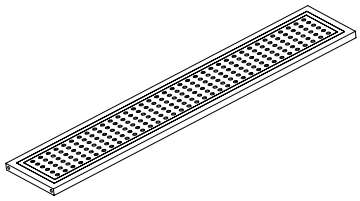

13
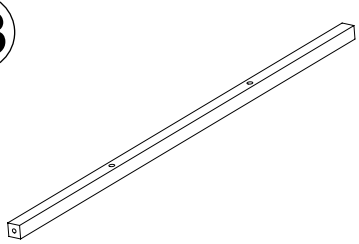

14
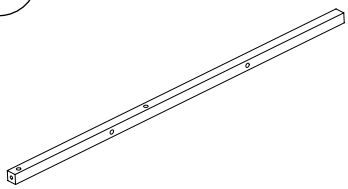

15
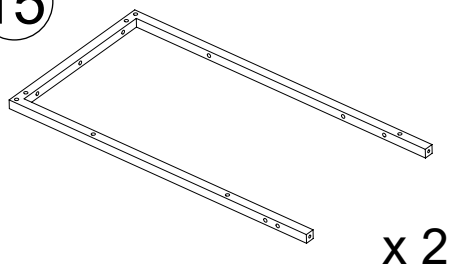
x 2

16
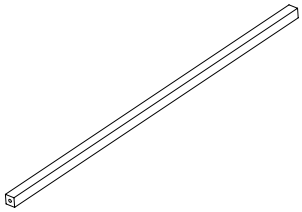

17
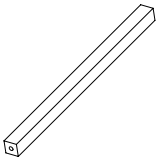
x 2

18
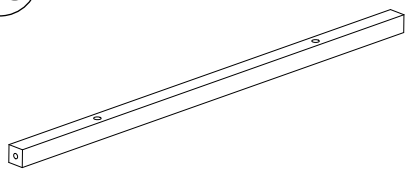
x 2

19

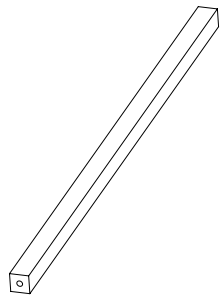

20

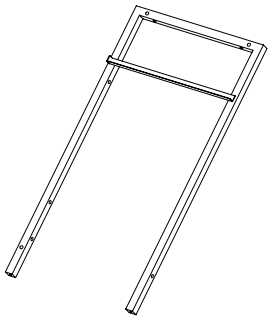

21

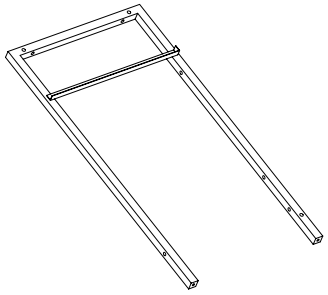

22

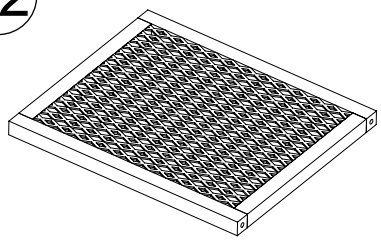

23

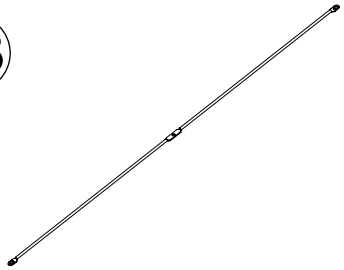

x 2

24



x 2

25

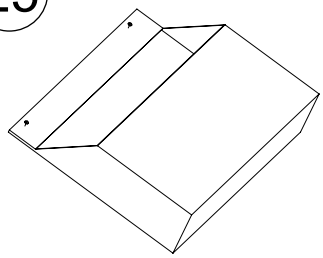

26

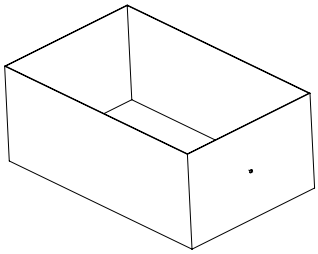

27

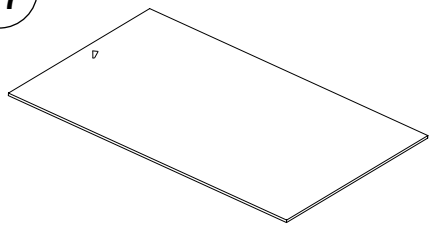

A M6*28 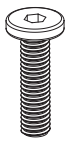 44 PCS	B 5.3*40  16 PCS	C M6*23  12 PCS	D M4*12  3 PCS	E 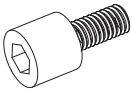 2 PCS
F 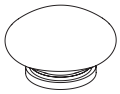 2 PCS	G M4*25 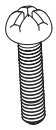 1 PCS	H 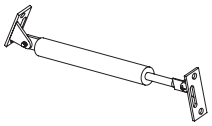 1 PCS	I 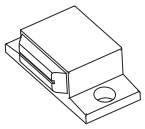 2 PCS	J ST4*12  20 PCS
K 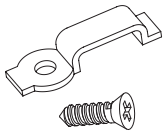 4 PCS	L 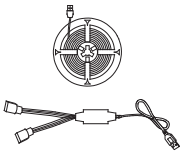 1 PCS	M M6 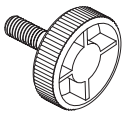 8 PCS	N M6*12 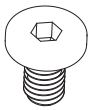 2 PCS	O 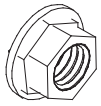 16PCS
P  1 PCS	Q M6X55  4 PCS	R 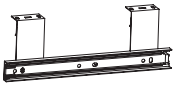 1 PCS	S 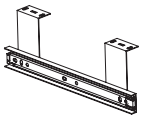 1 PCS	T 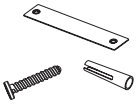 2 PCS
U M6X50 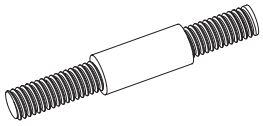 1 PCS	V 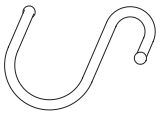 3 PCS	TOOLS  4mm  3mm 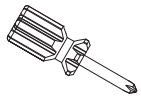 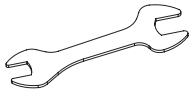		

1

I	J ST4*12
2 PCS	4 PCS

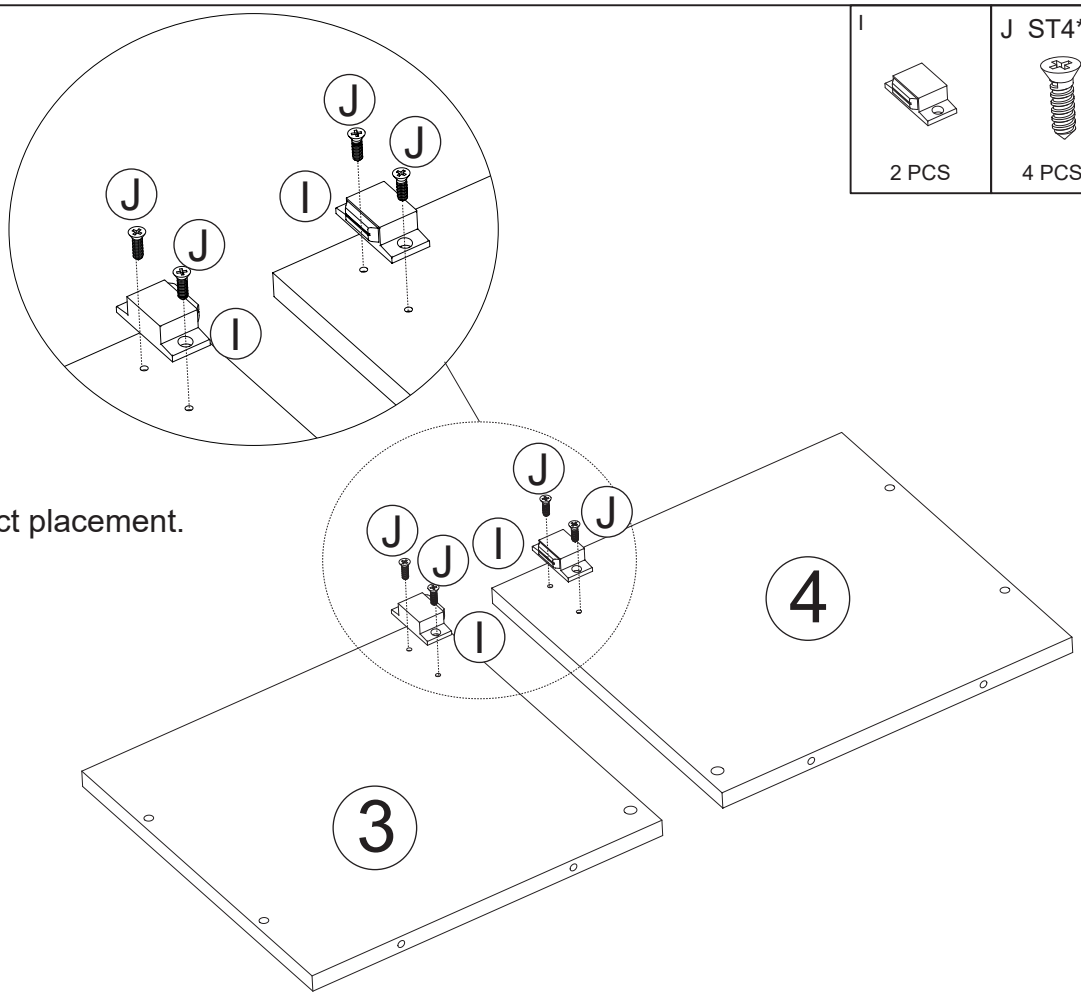

Pay attention to product placement.

2

B 5.3*40
2 PCS

Pay attention to product placement.

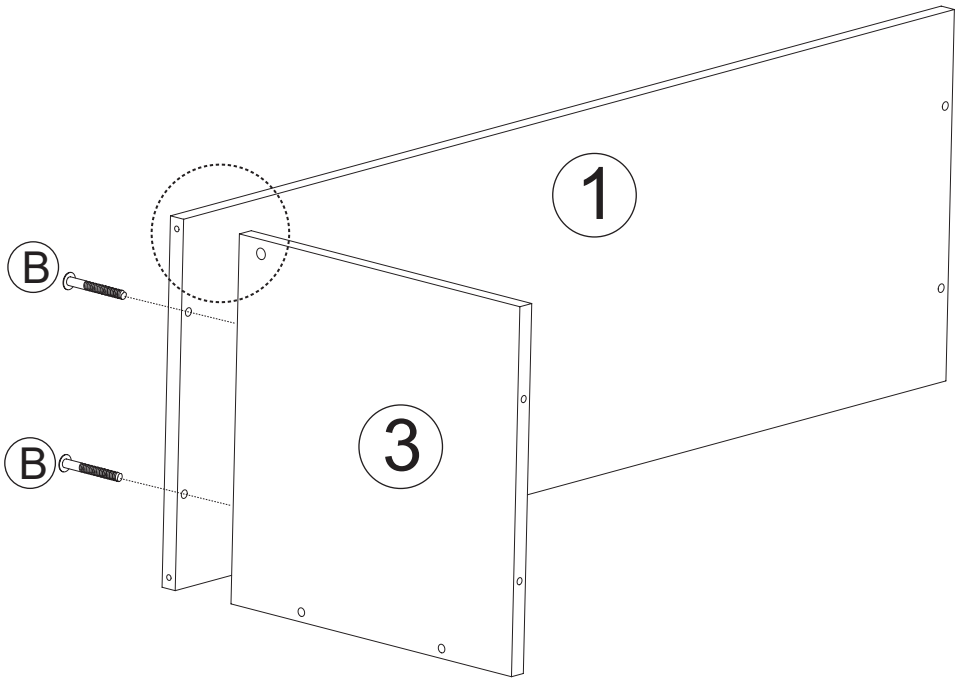

3

B 5.3*40

2 PCS

Pay attention to product placement.

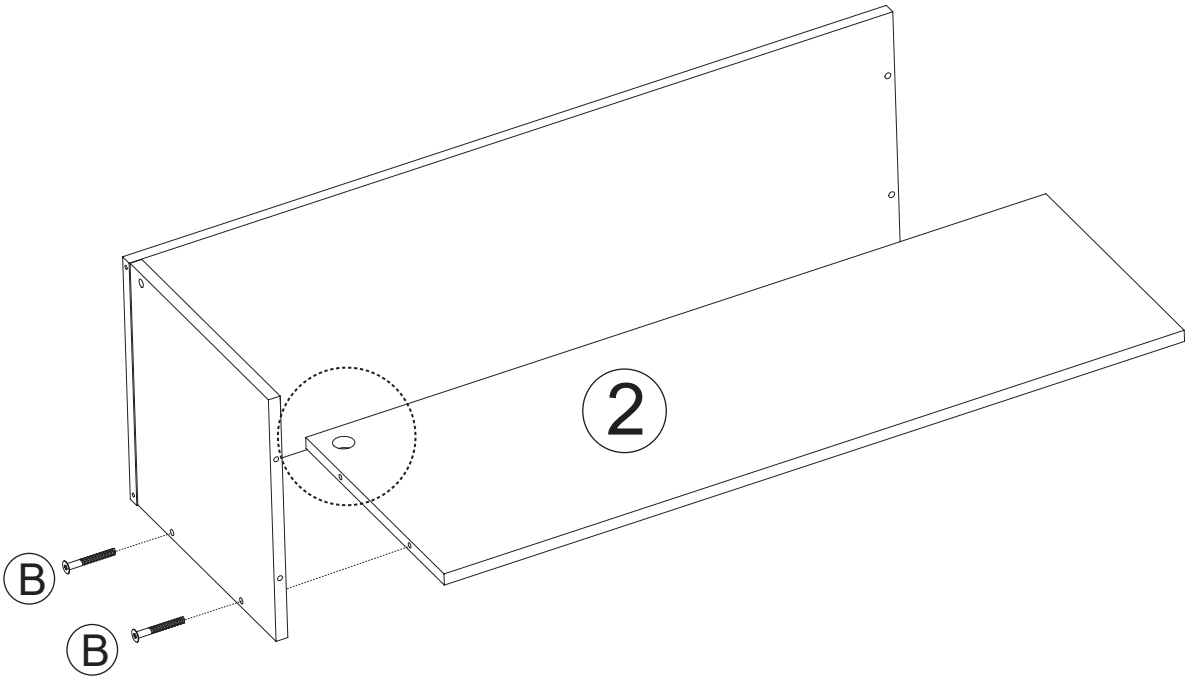

4

H

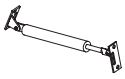

1 PCS

J ST4*12



2 PCS

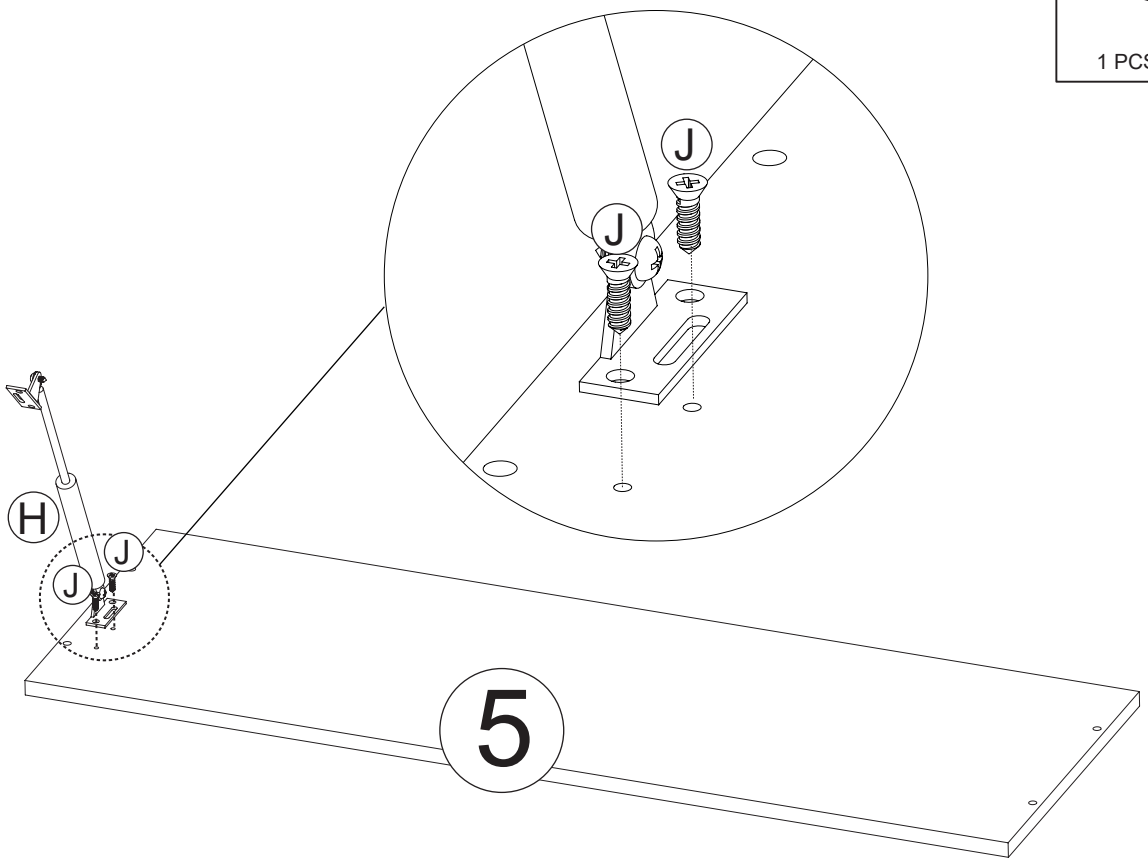

5

B 5.3*40



2 PCS

Pay attention to product placement.

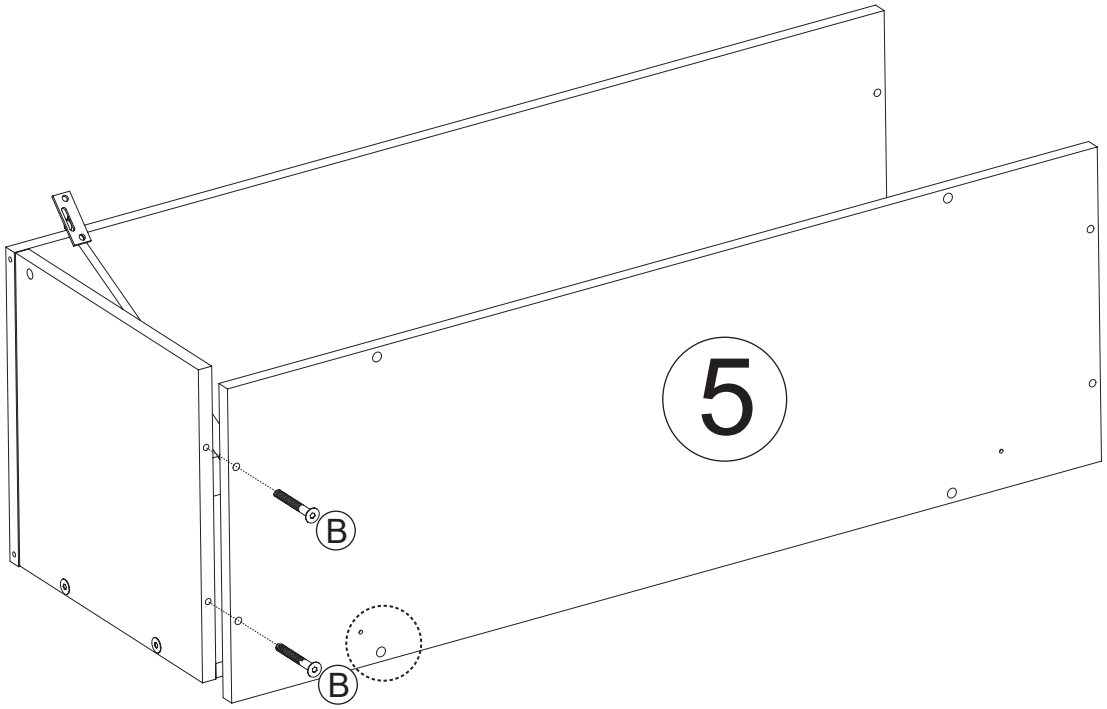

6

F	G M4*25	E
		
1 PCS	1 PCS	2 PCS

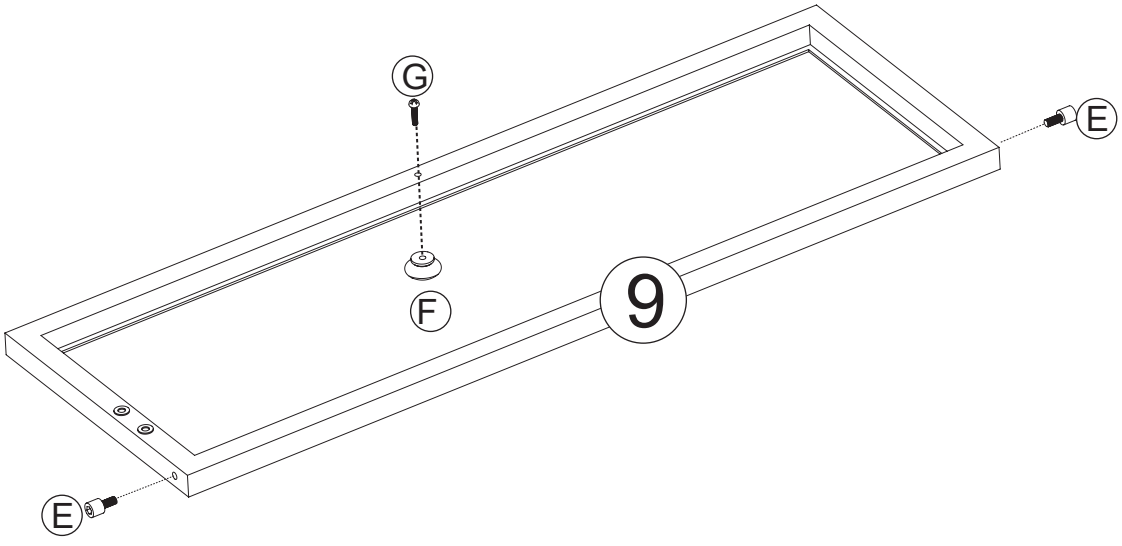

7

D M4*12

2 PCS

(1)

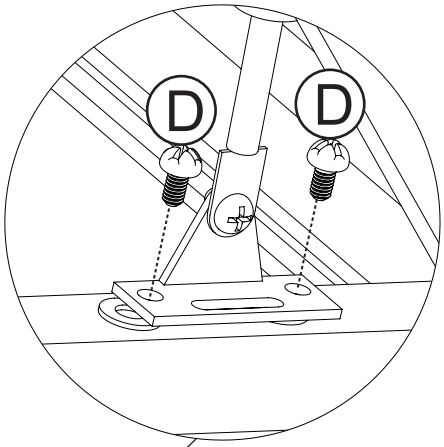

(2)

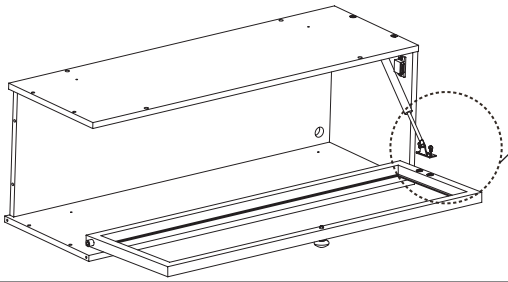

8

B 5.3*40



6 PCS

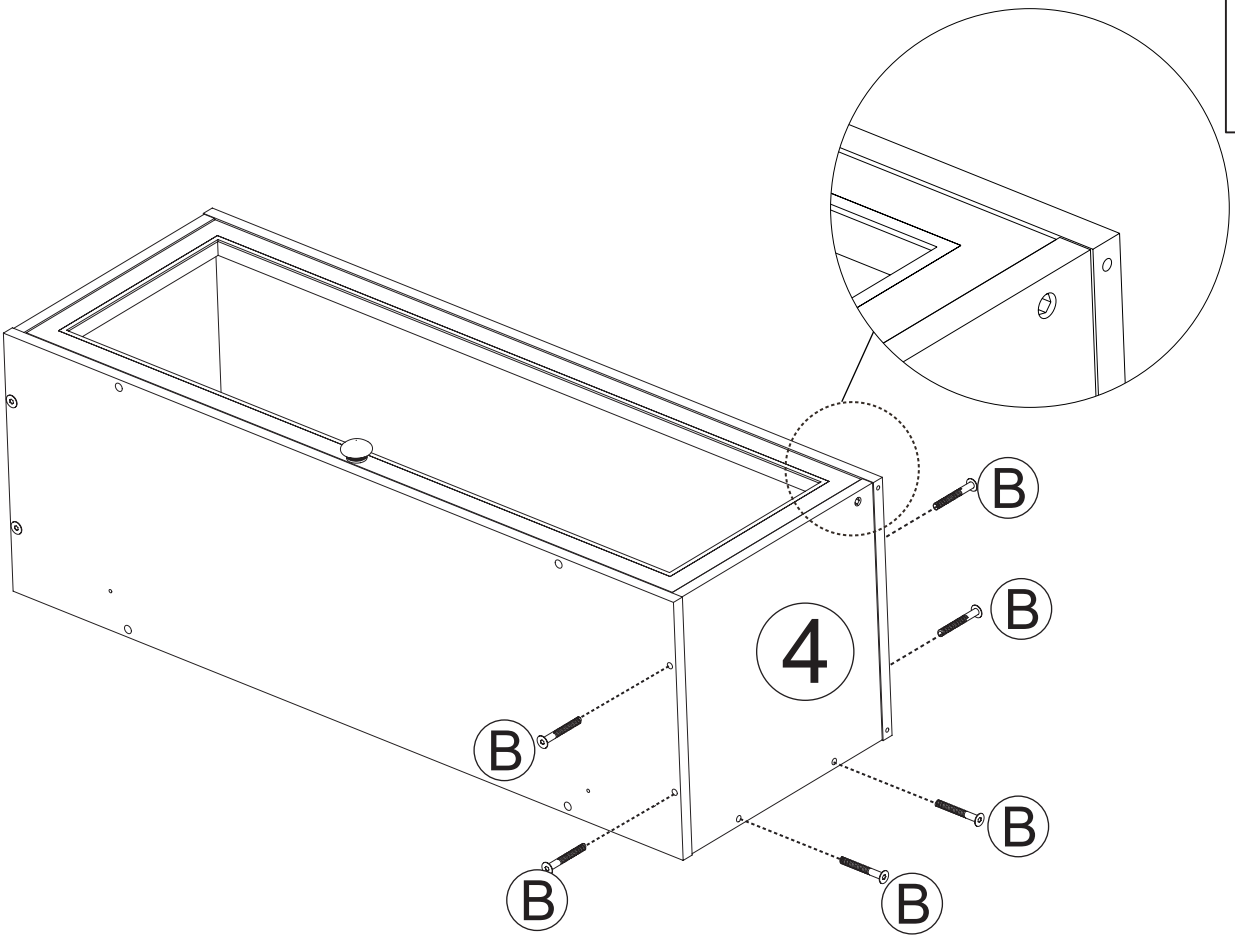

9

C M6*23

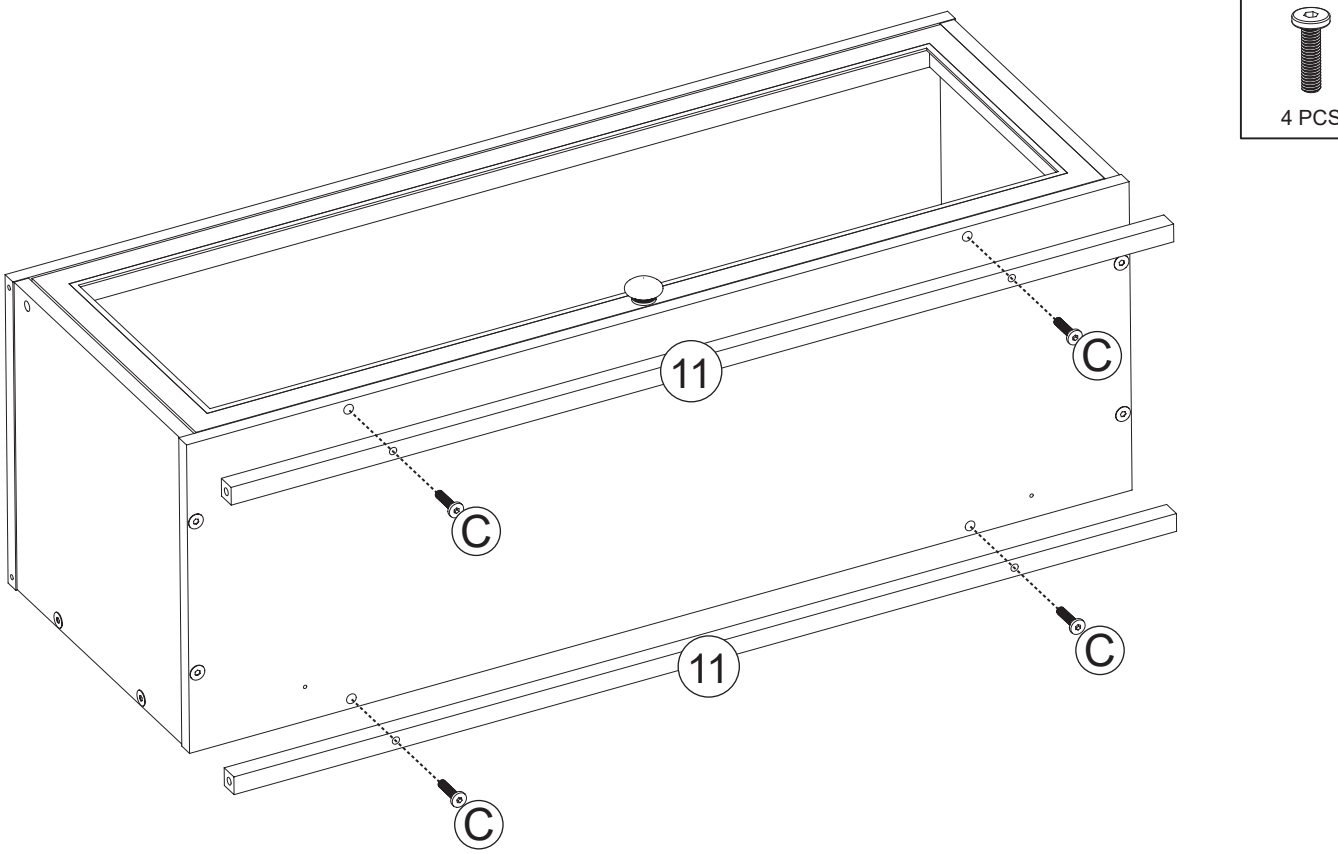

4 PCS

10

B 5.3*40



4 PCS

C M6*23



8 PCS

Pay attention to product placement.

11

L	K
	
1 PCS	4 PCS

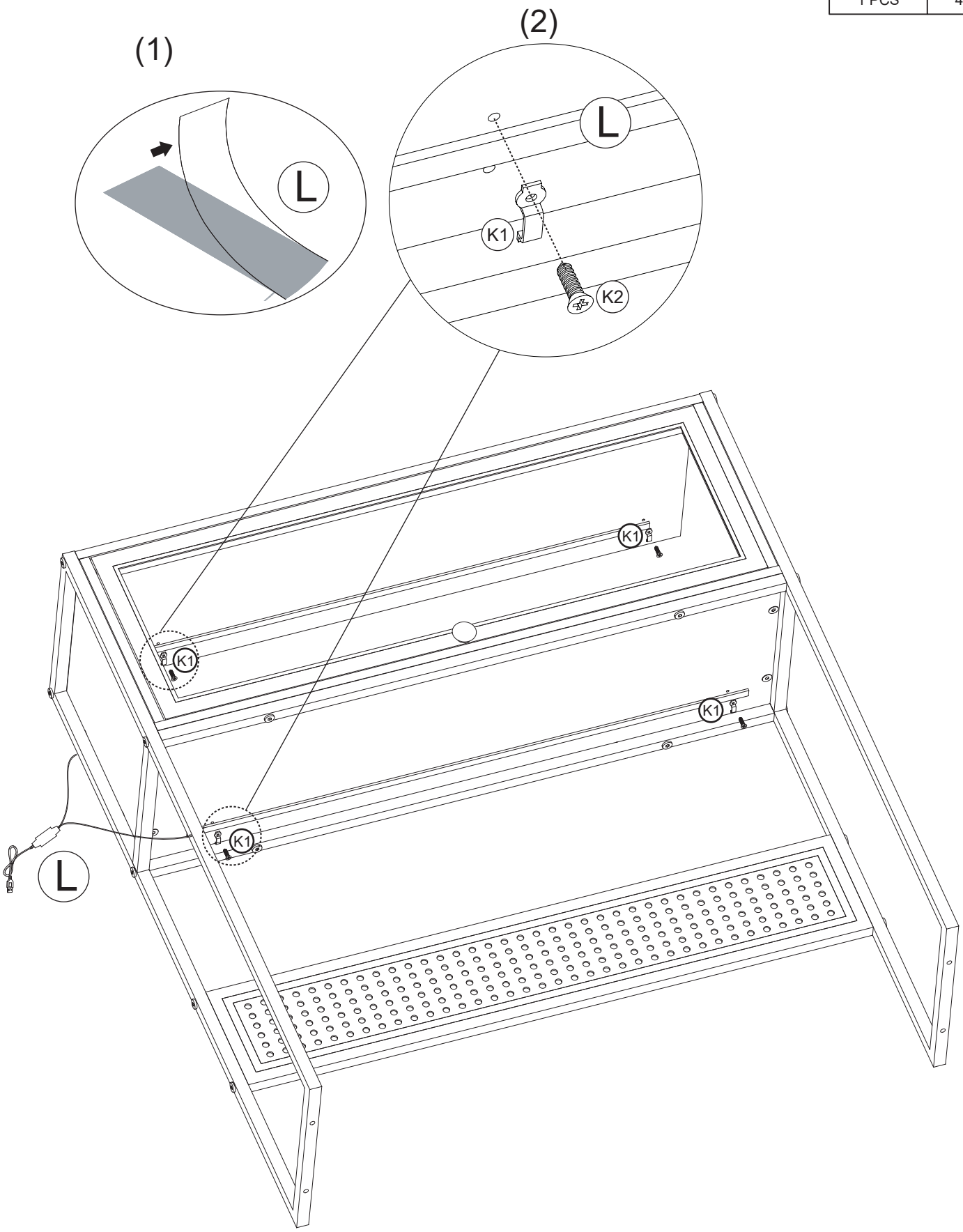

12

A M6*28

3 PCS

Pay attention to product placement.

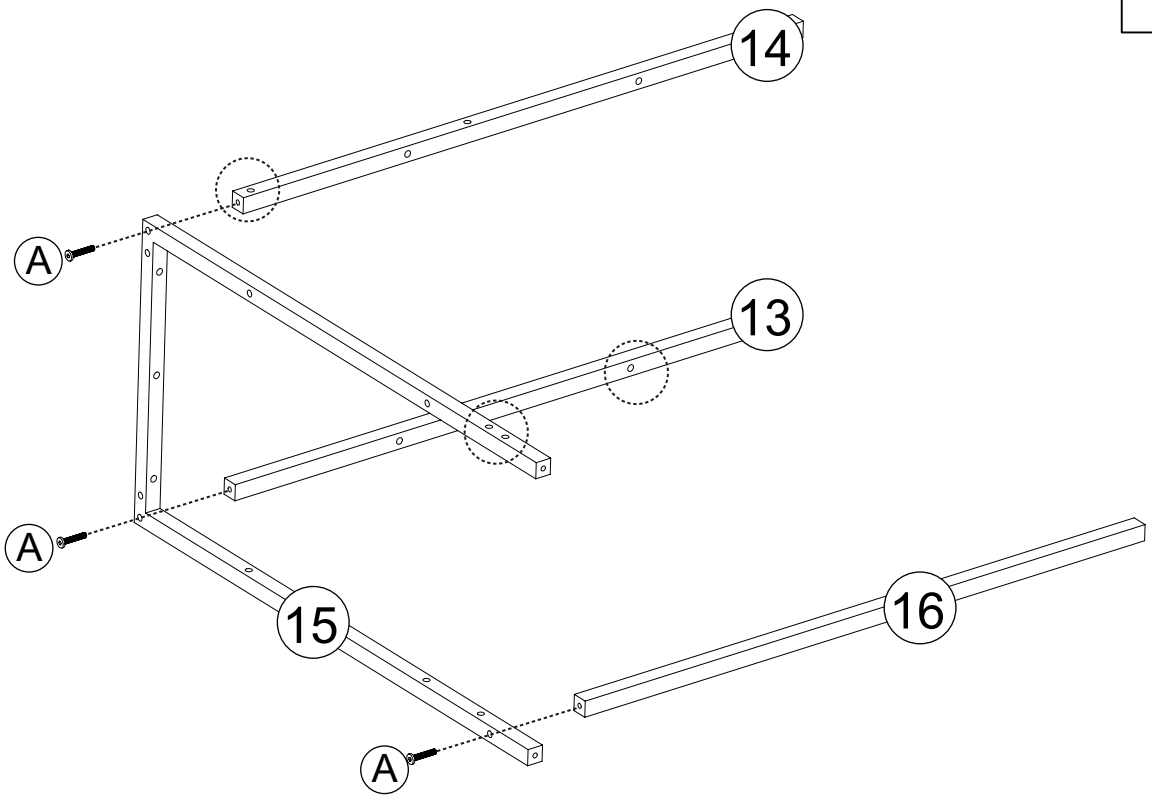

13

A M6*28



7 PCS

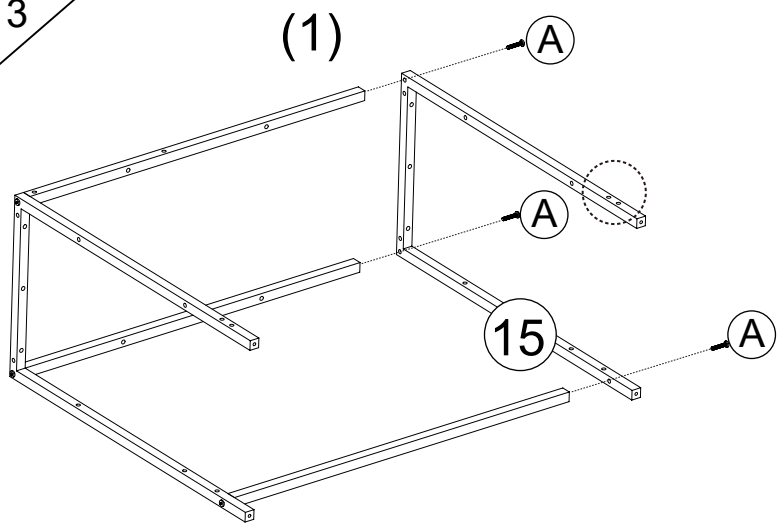

Pay attention to product placement.

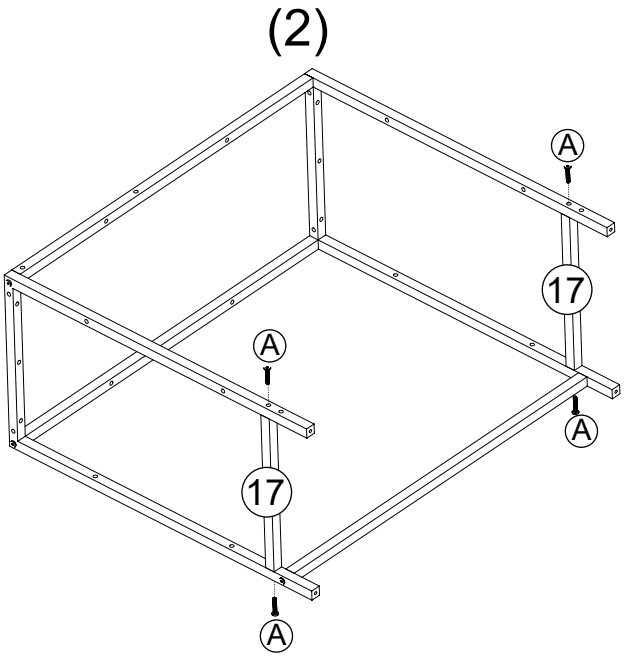

14

M

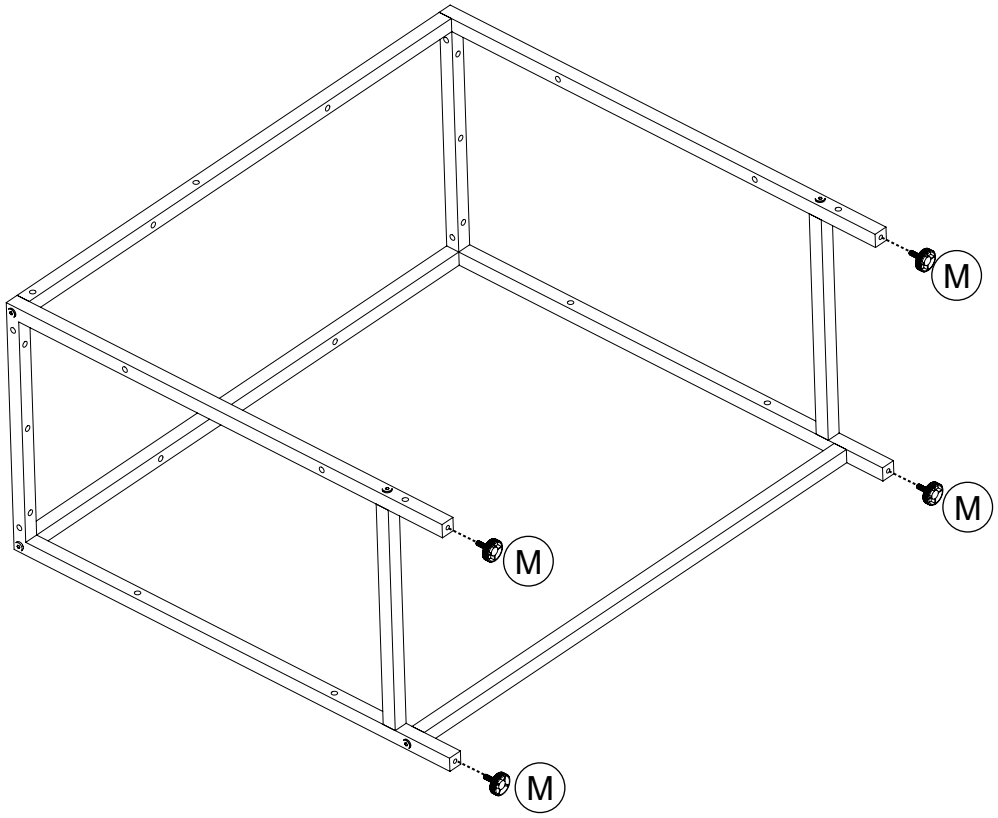

4 PCS

15

M

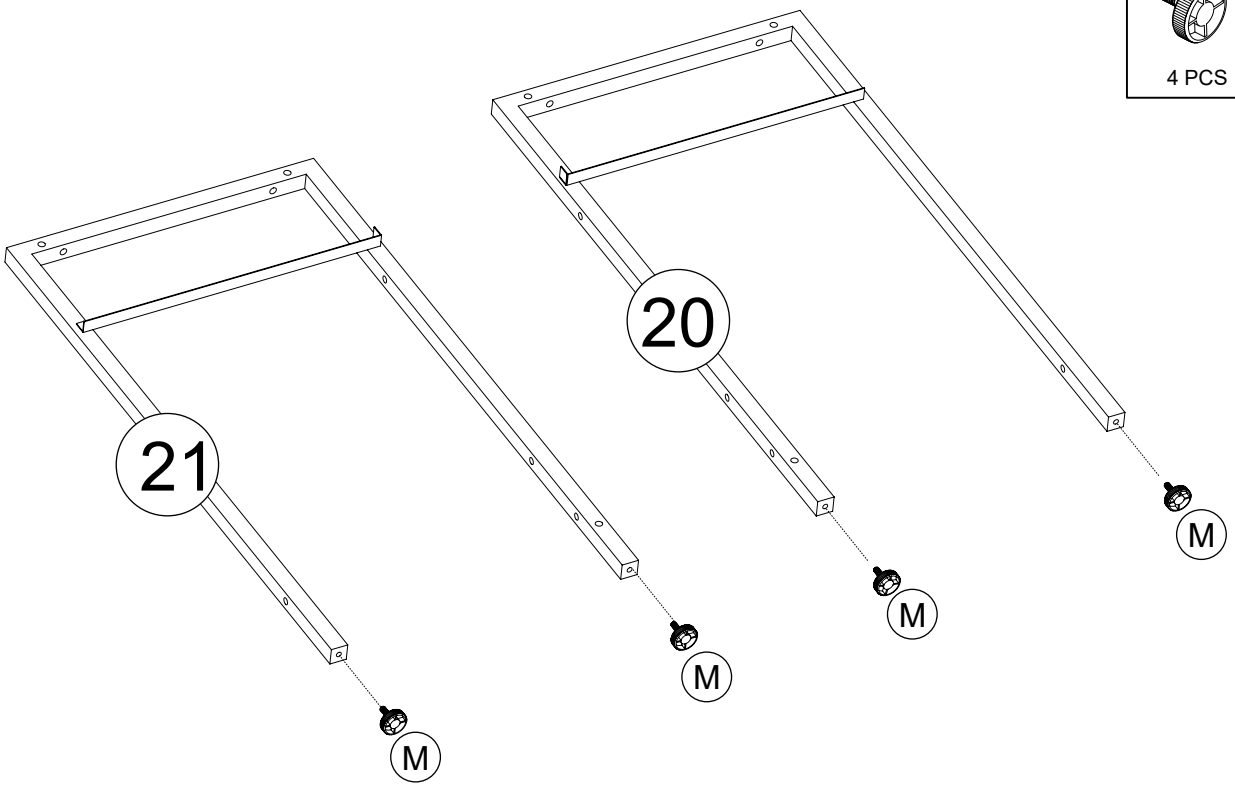

4 PCS

16

A M6*28



6 PCS

Pay attention to product placement.

17

A M6*28

4 PCS

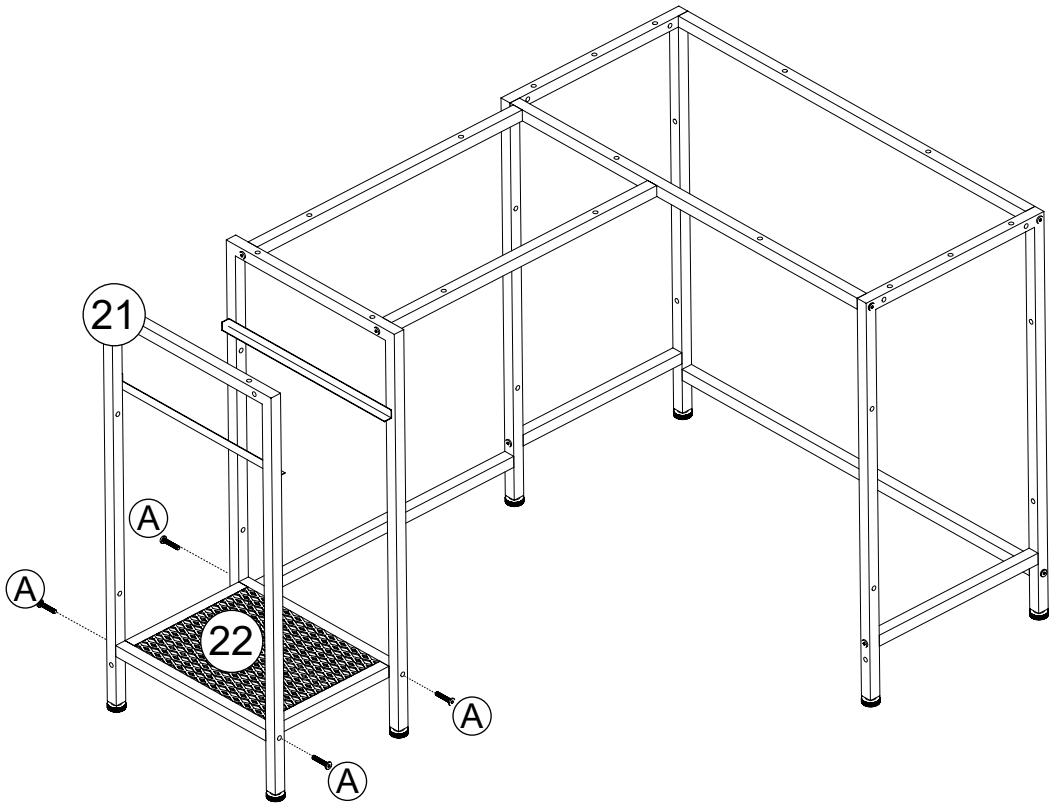

18

O	N M6*12
	
2 PCS	2 PCS

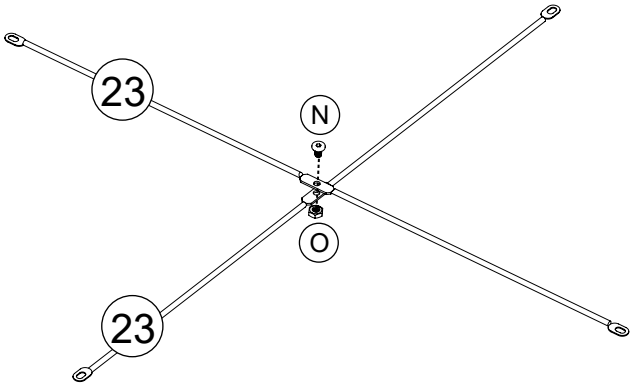

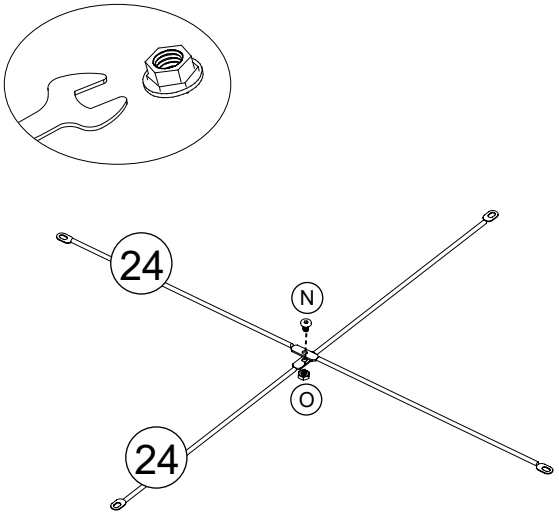

19

O M6*28	A M6*28
	
8 PCS	8 PCS

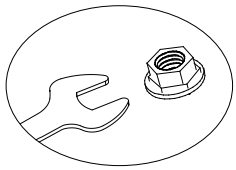

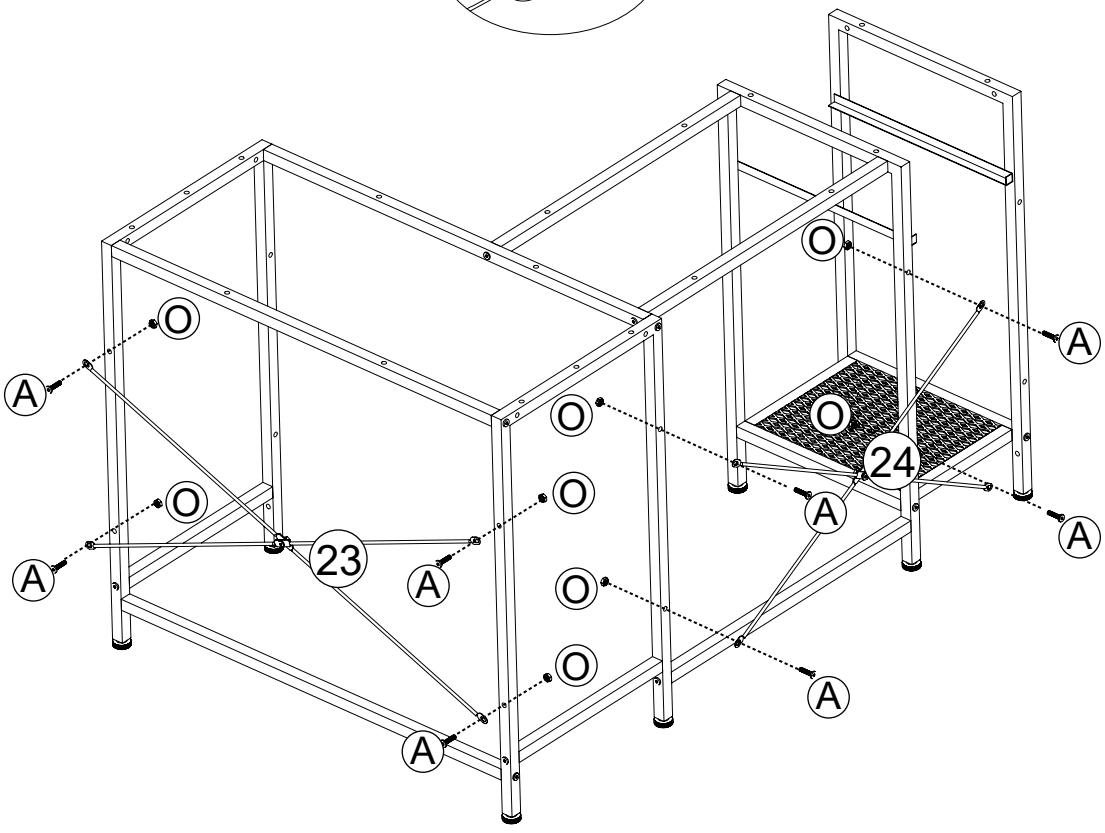

20

O	A M6*28
	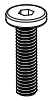
2 PCS	2 PCS

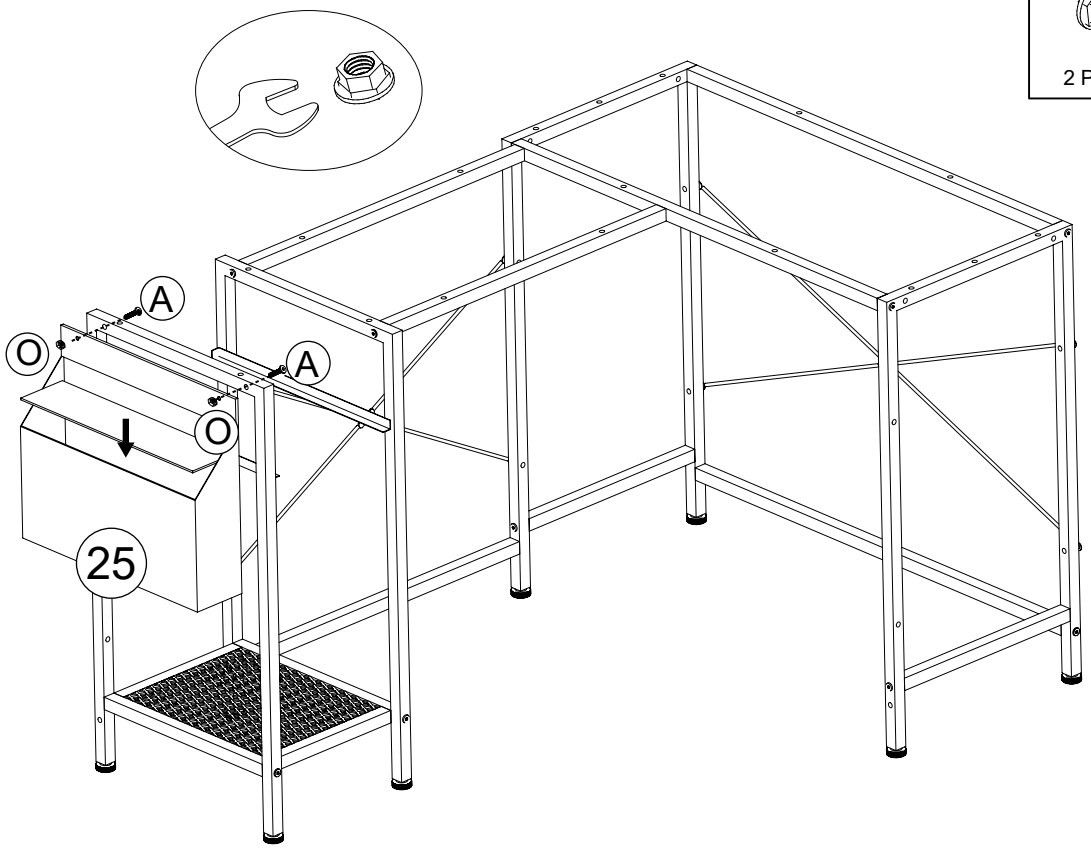

21

A M6*28

14 PCS

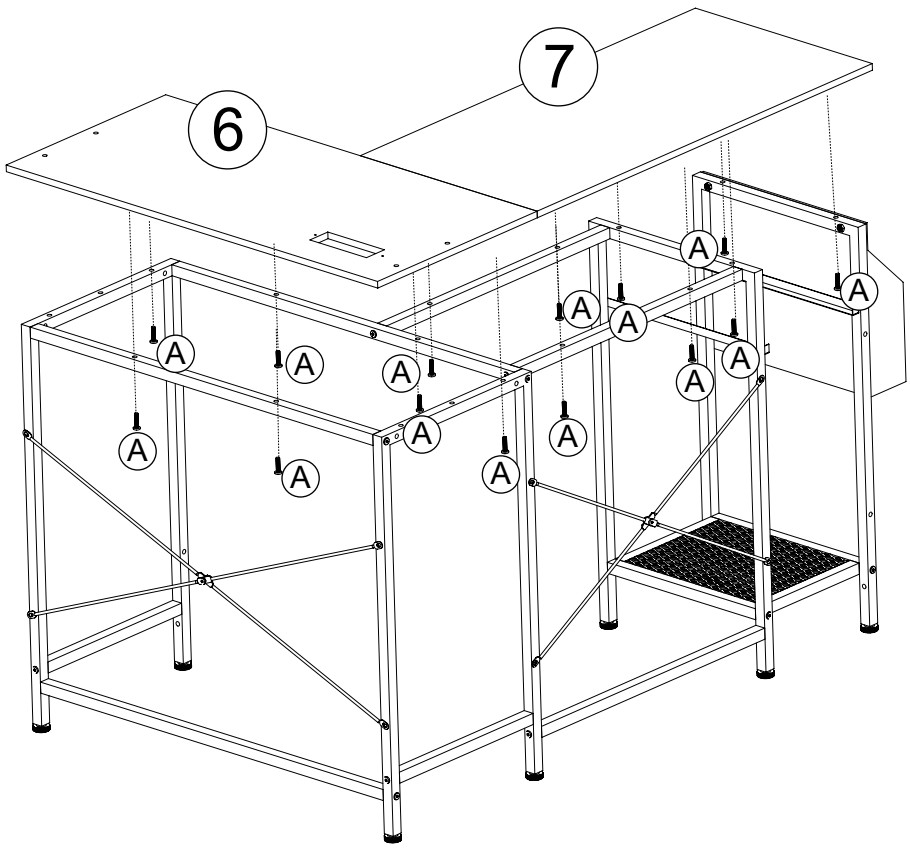

22

P	J ST4*12
	
1 PCS	2 PCS

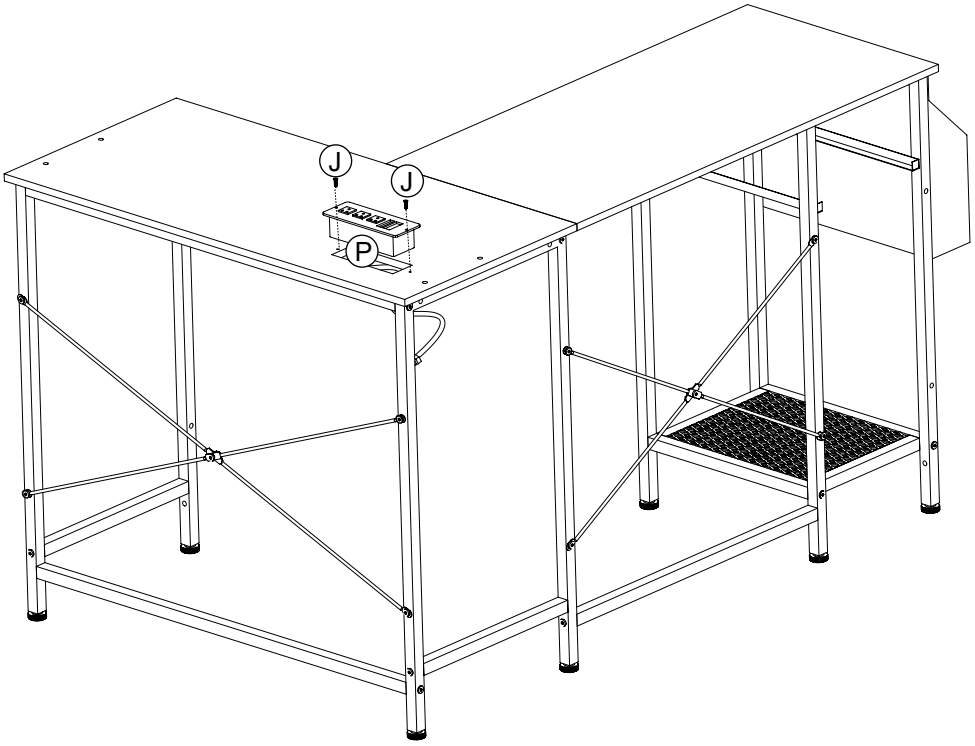

23

O	Q M6*55
	
4 PCS	4 PCS

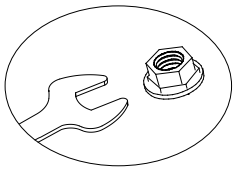

24

F	D M4*12
	
1 PCS	1 PCS

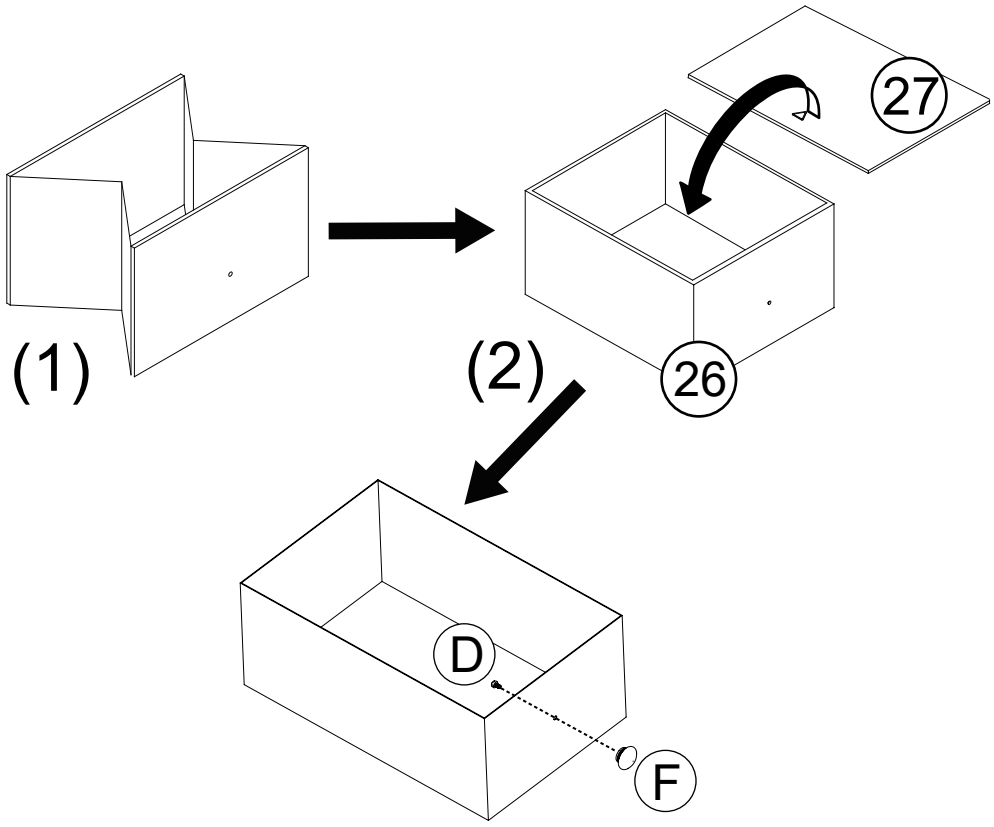

25

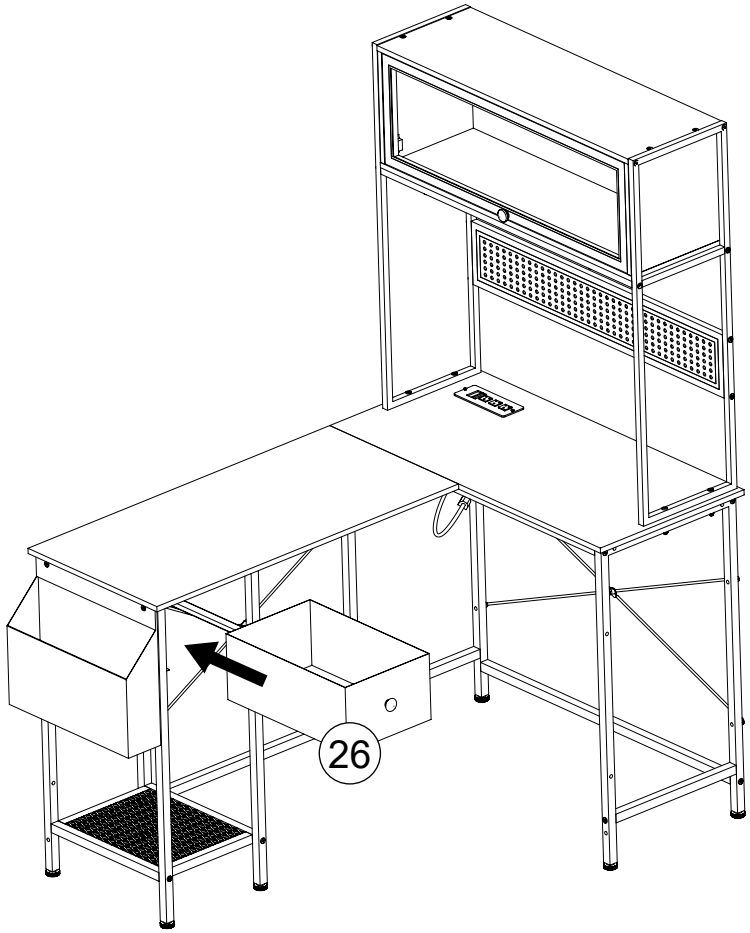

26

R	S	J ST4*12
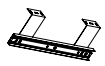		
1 PCS	1 PCS	8 PCS

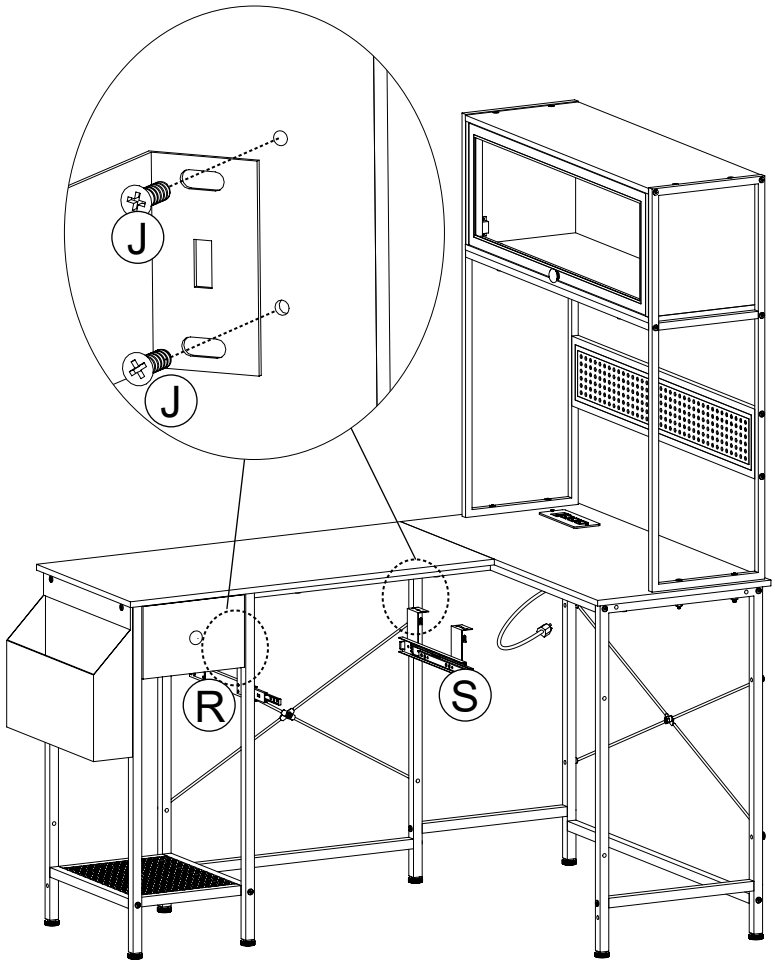

27

J ST4*12



4 PCS

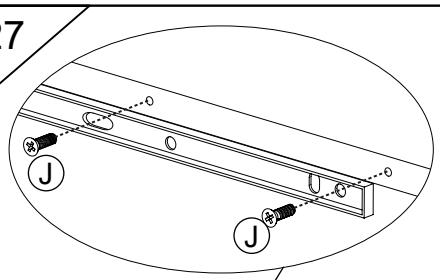

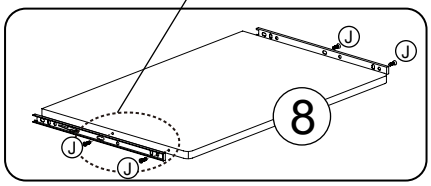

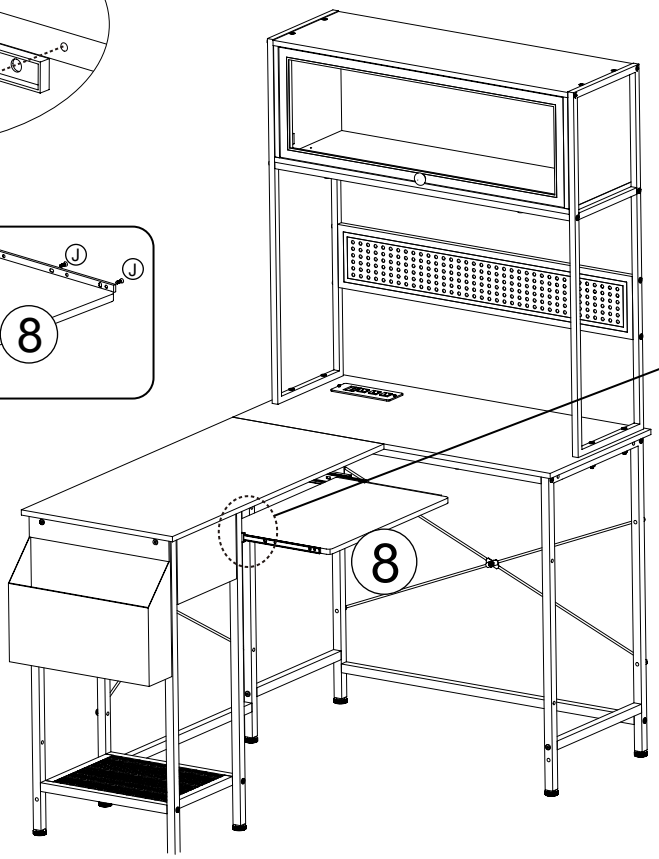

Attention:Align the slide runners on the drawer with the unit and push it carefully inside until it stops.

★if the drawer does not go in smoothly please take it out and repeat the step.

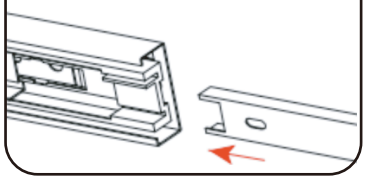

28

V	T
	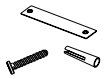
3 PCS	2 PCS

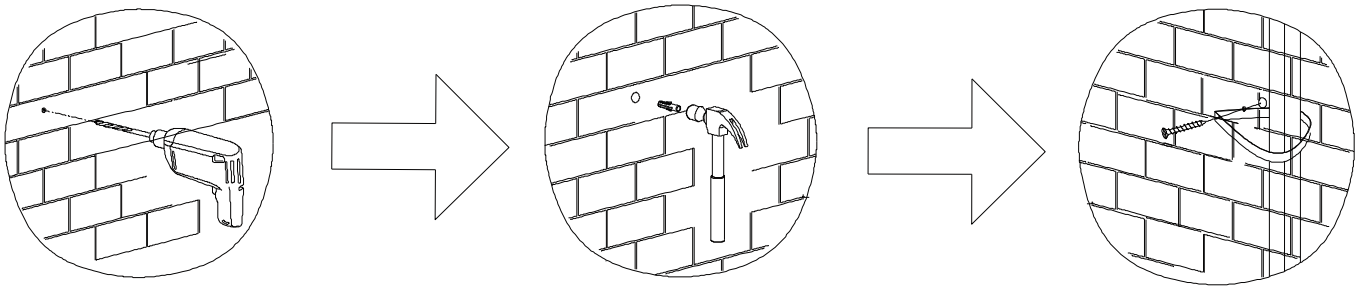

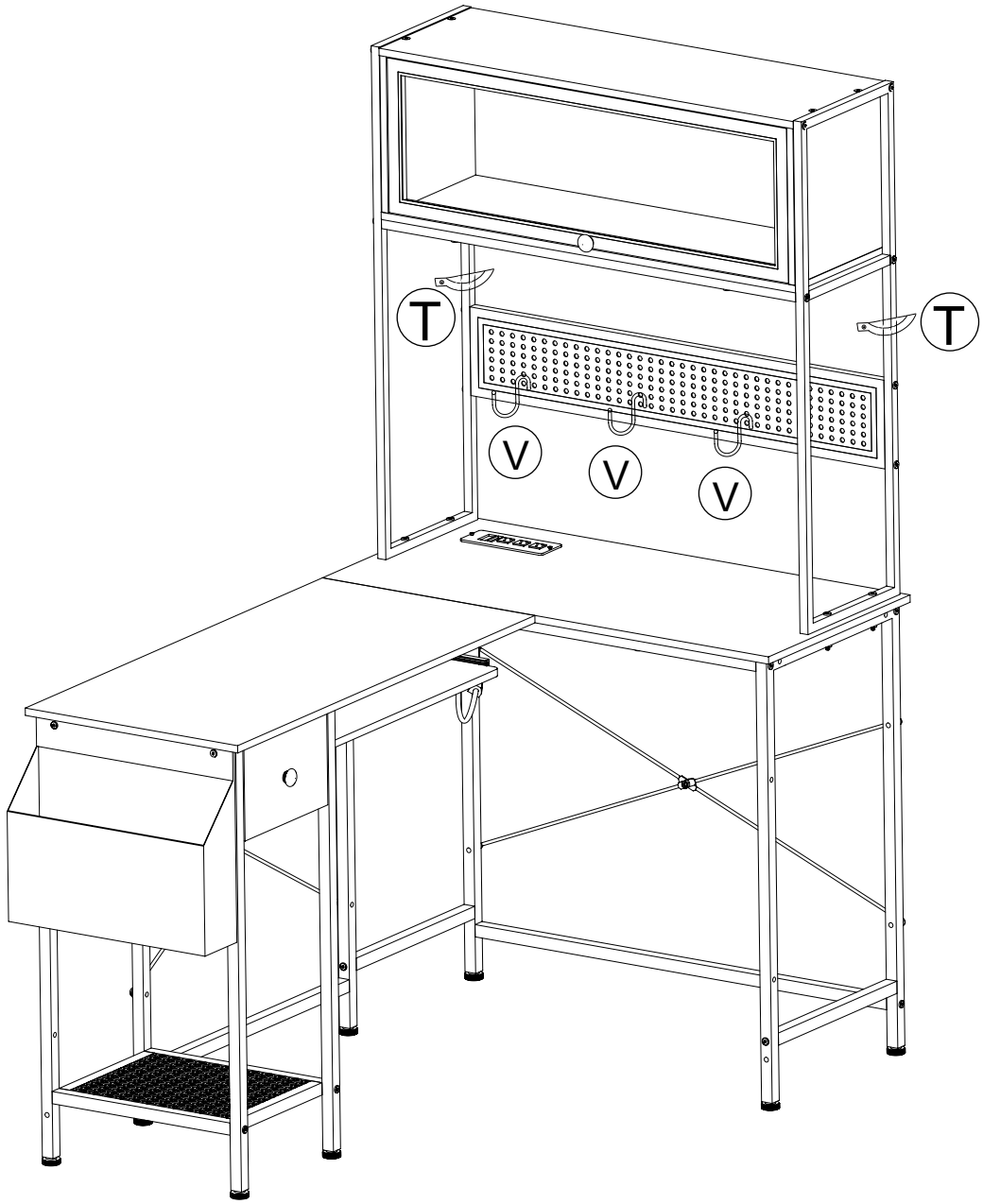

29

A M6*28



3 PCS

Pay attention to product placement.

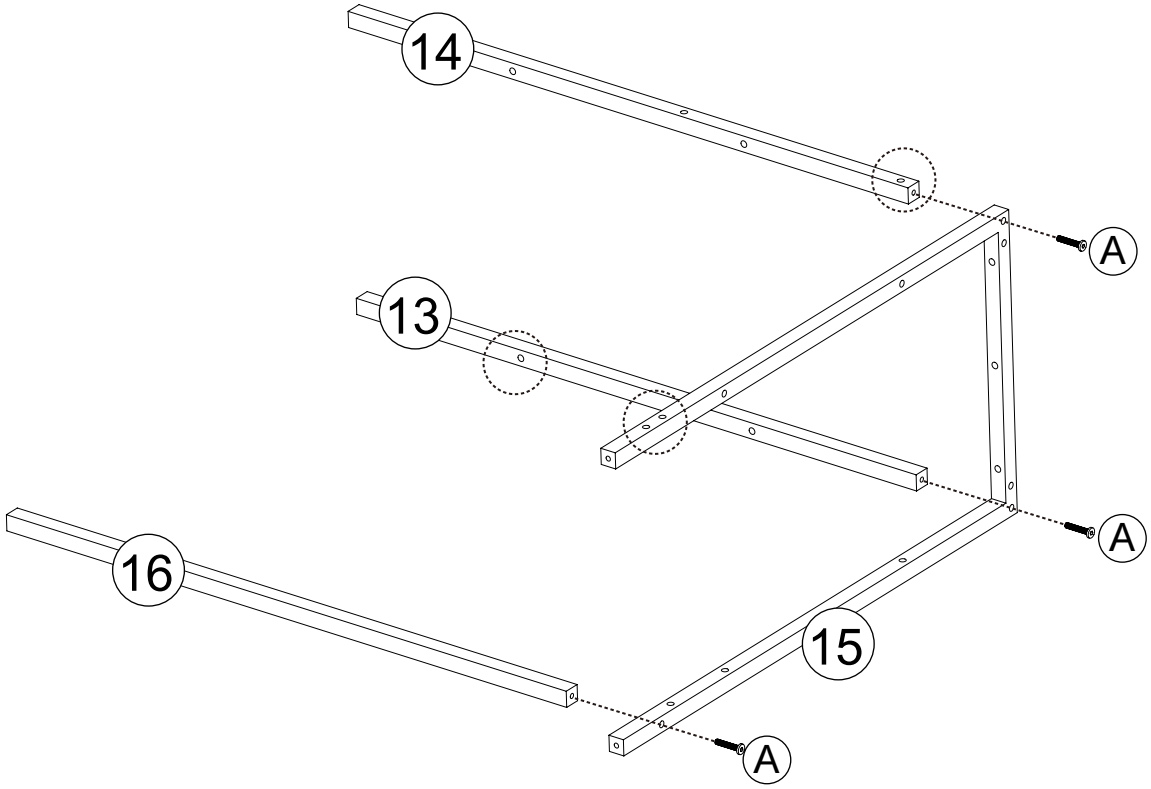

30

A M6*28



7 PCS

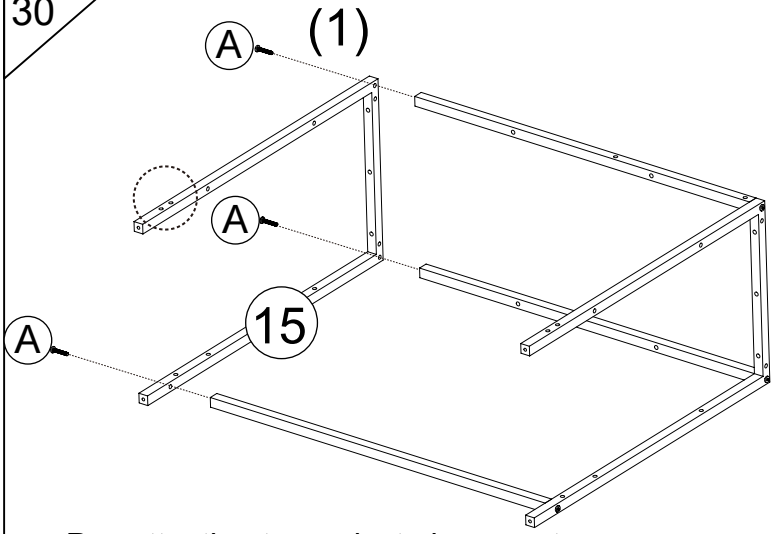

Pay attention to product placement.

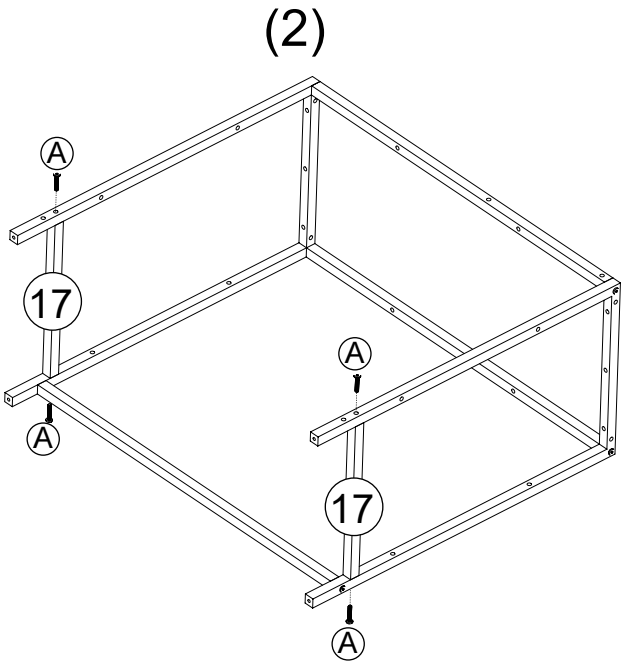

31

M



4 PCS

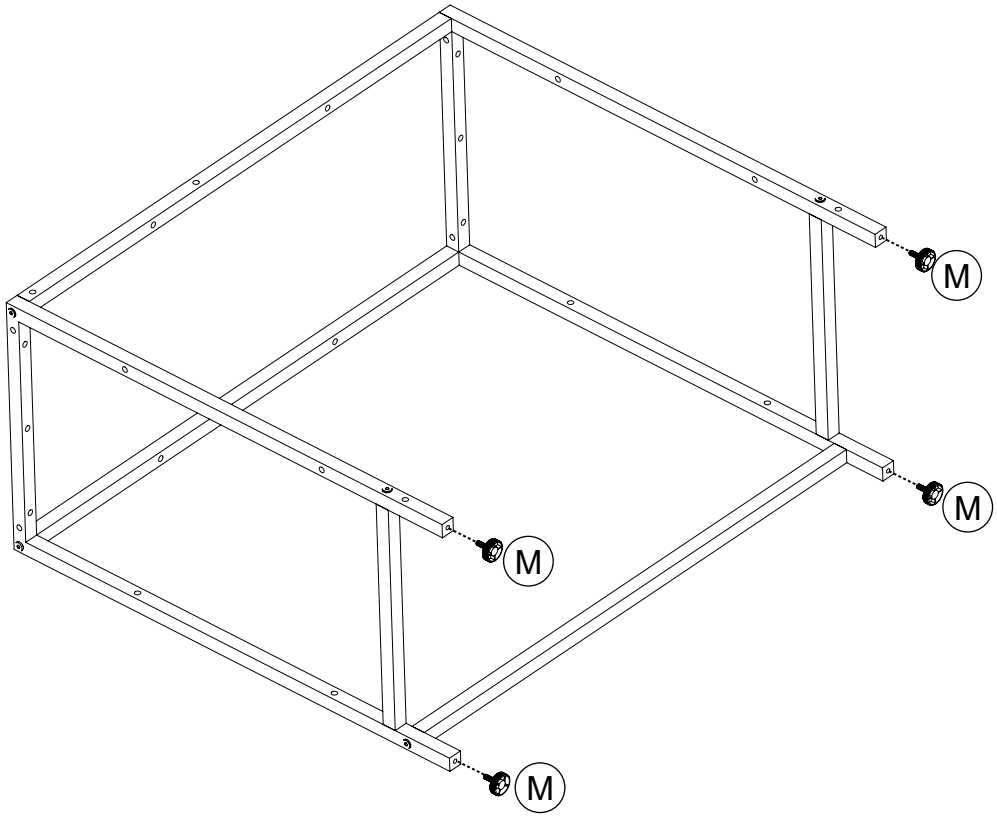

32

M



4 PCS

33

A M6*28

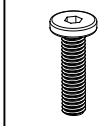

6 PCS

Pay attention to product placement.

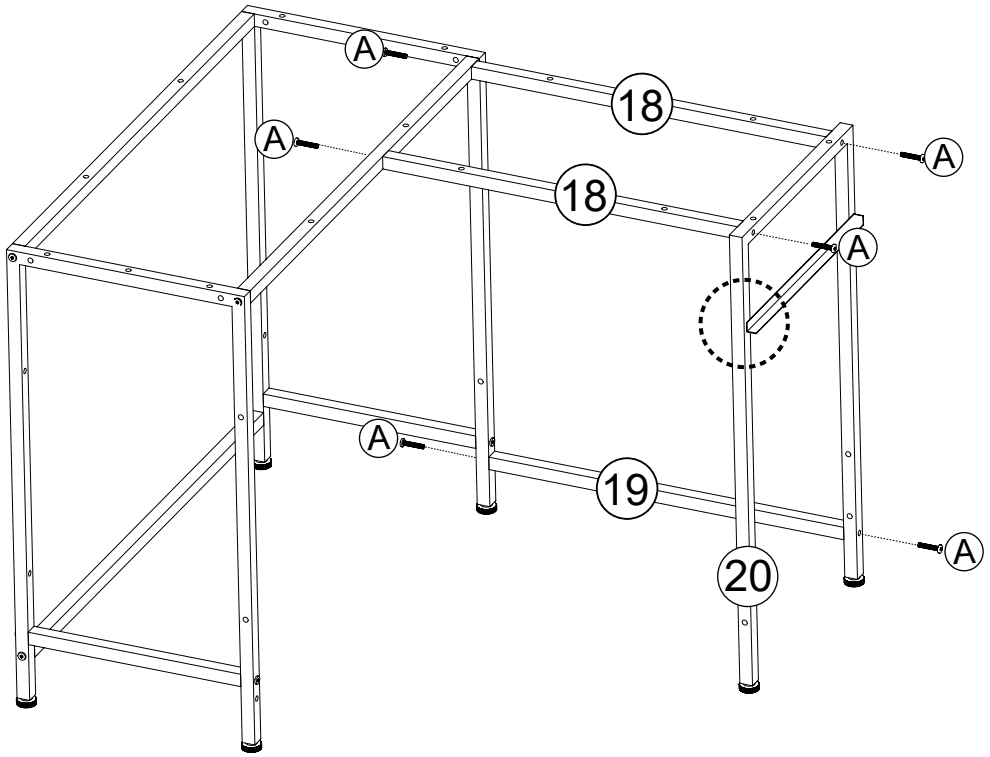

34

A M6*28

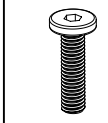

4 PCS

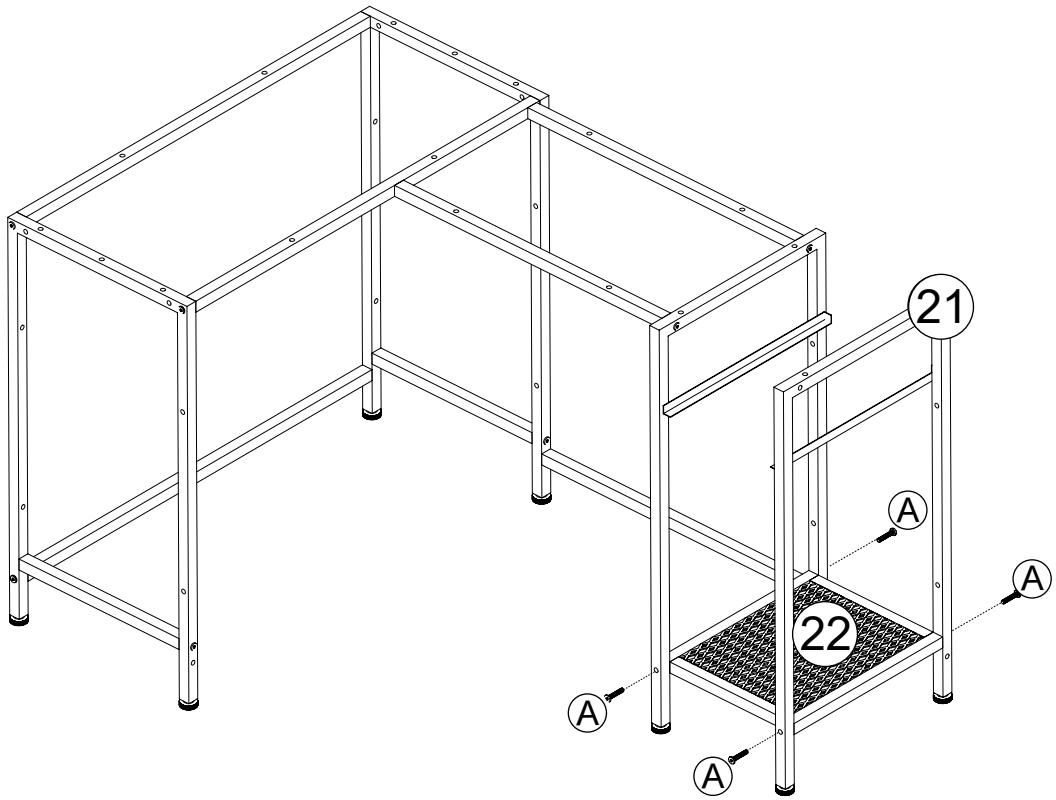

35

O	N M6*12
	
2 PCS	2 PCS

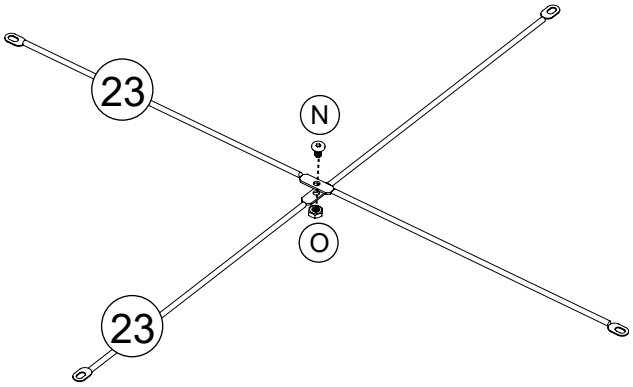

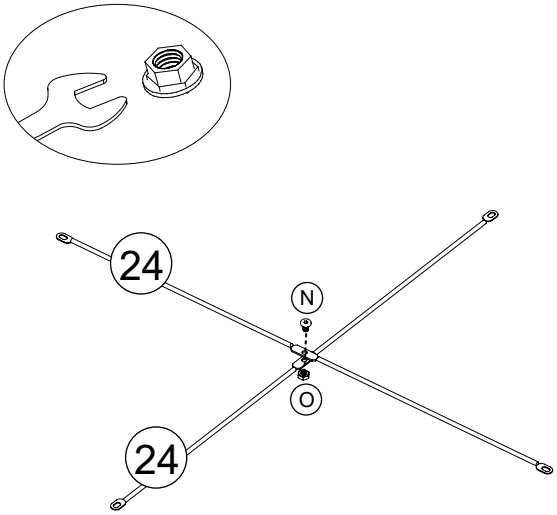

36

O M6*28	A M6*28
	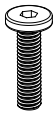
8 PCS	8 PCS

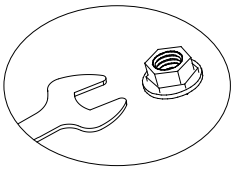

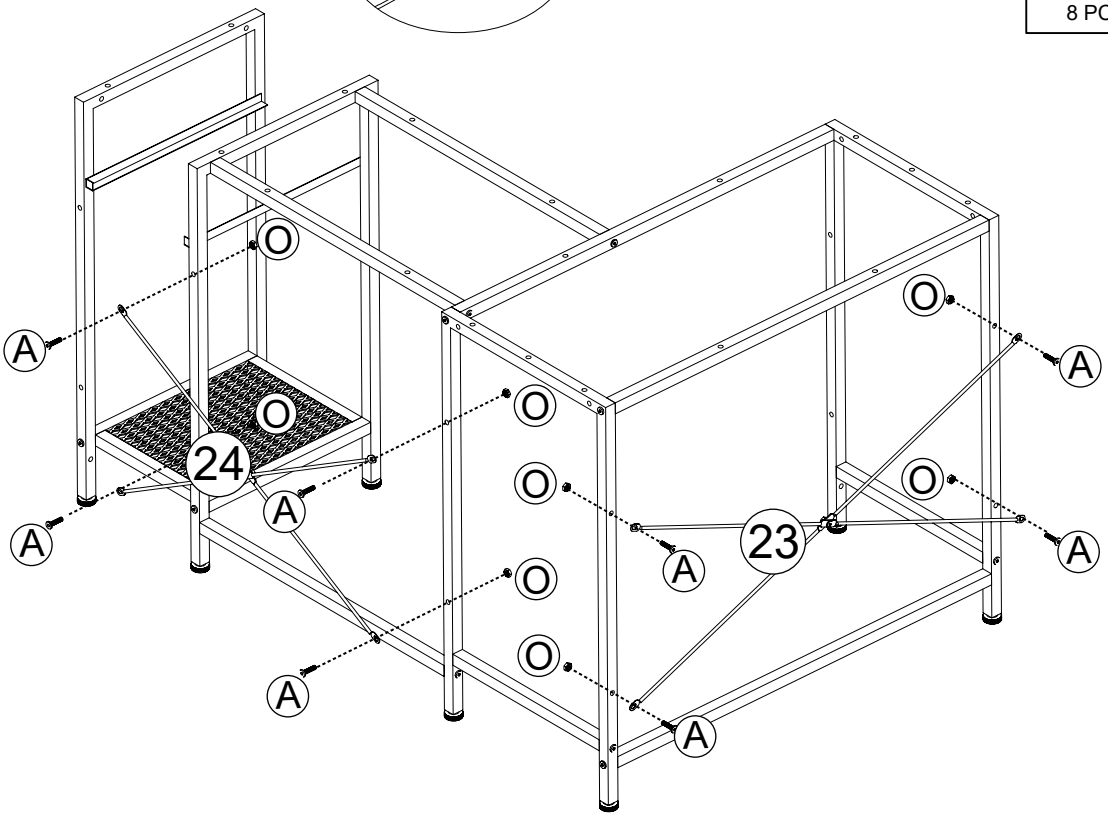

37

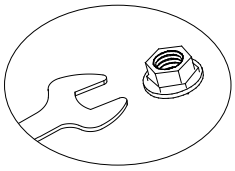

O	A M6*28
	
2 PCS	2 PCS

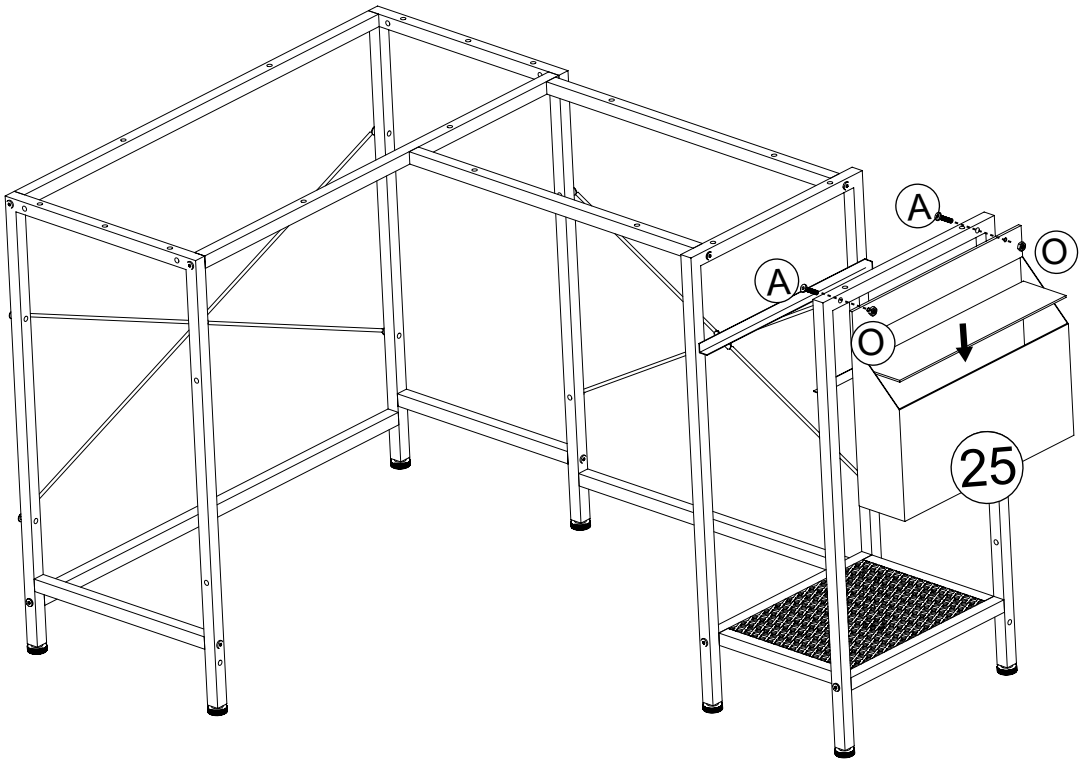

38

A M6*28
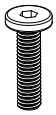
14 PCS

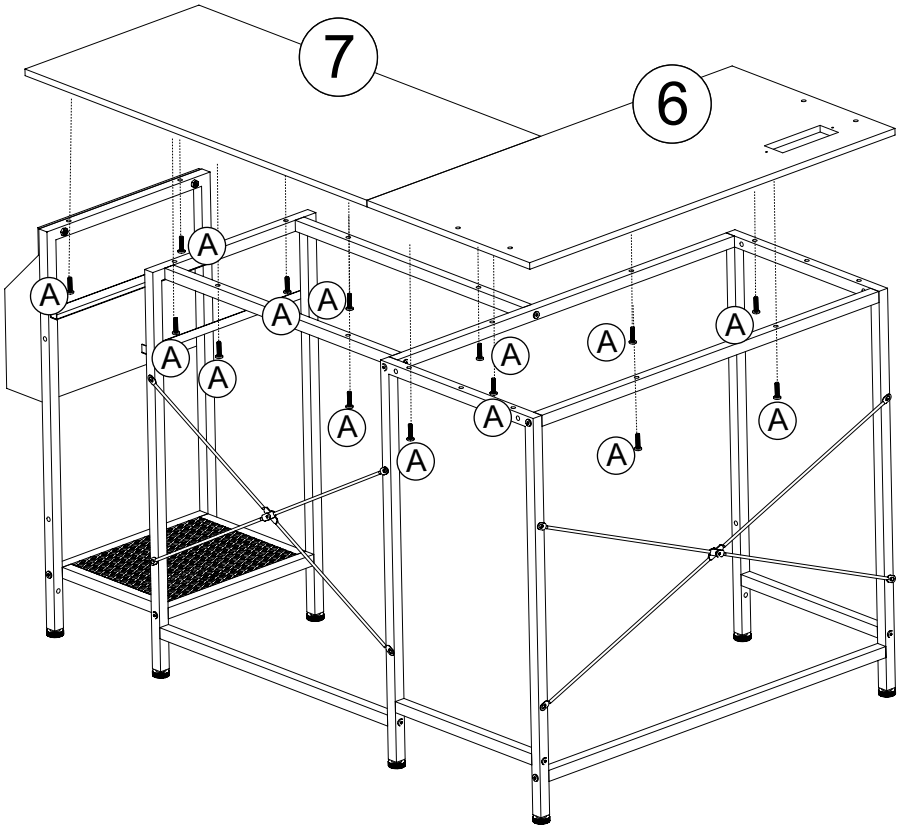

39

P	J ST4*12
	
1 PCS	2 PCS

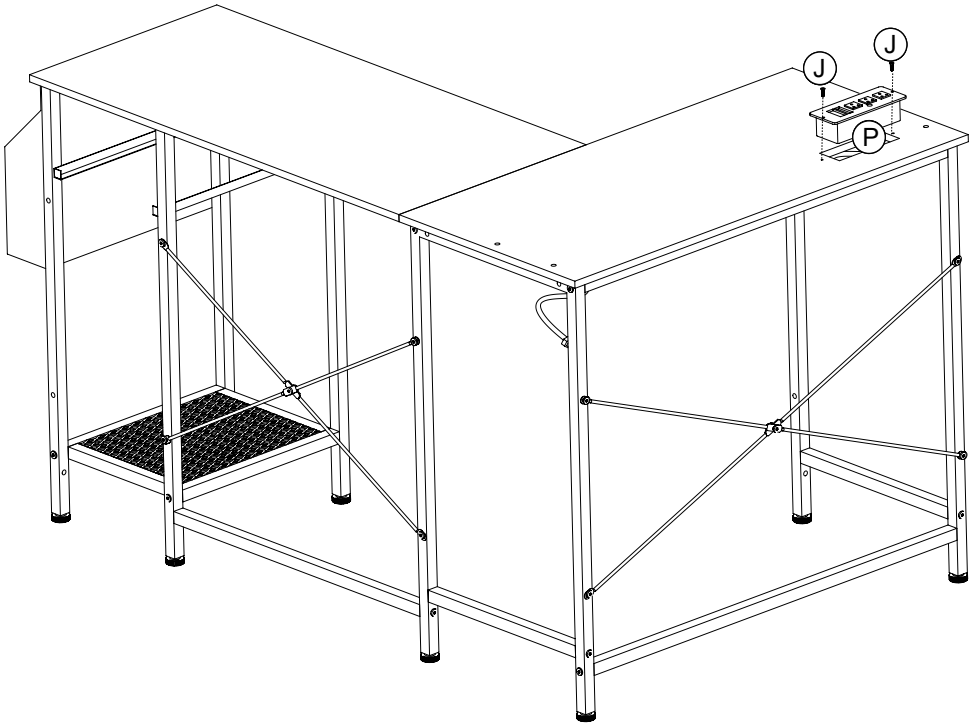

40

O	Q M6*55
	
4 PCS	4 PCS

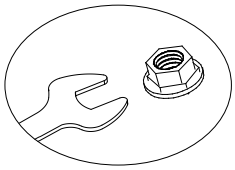

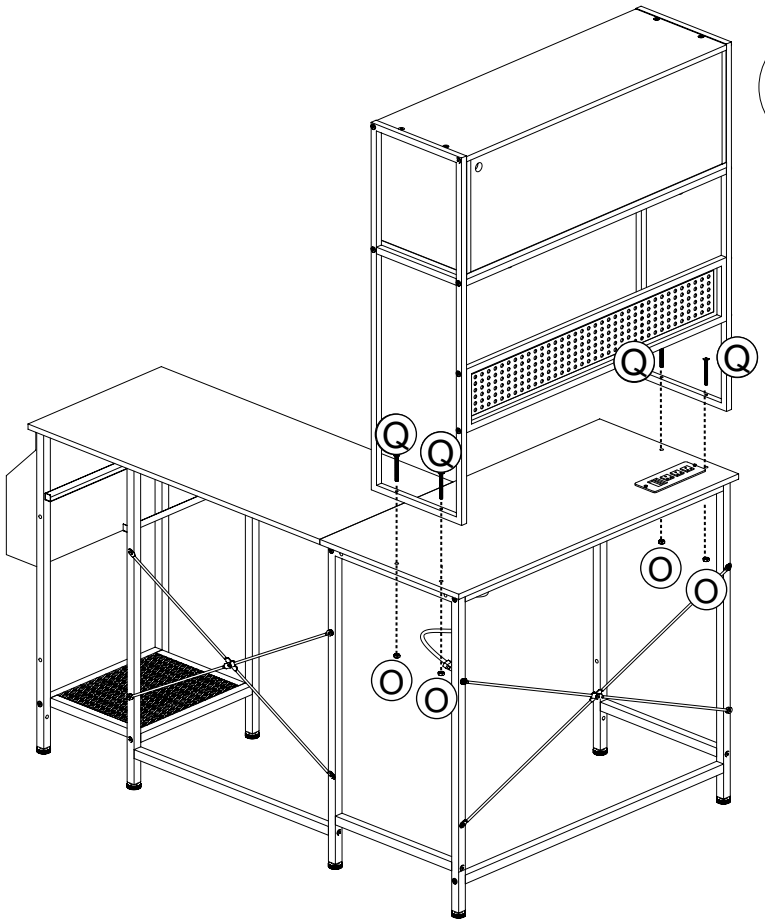

41

F	D M4*12
 1 PCS	 1 PCS

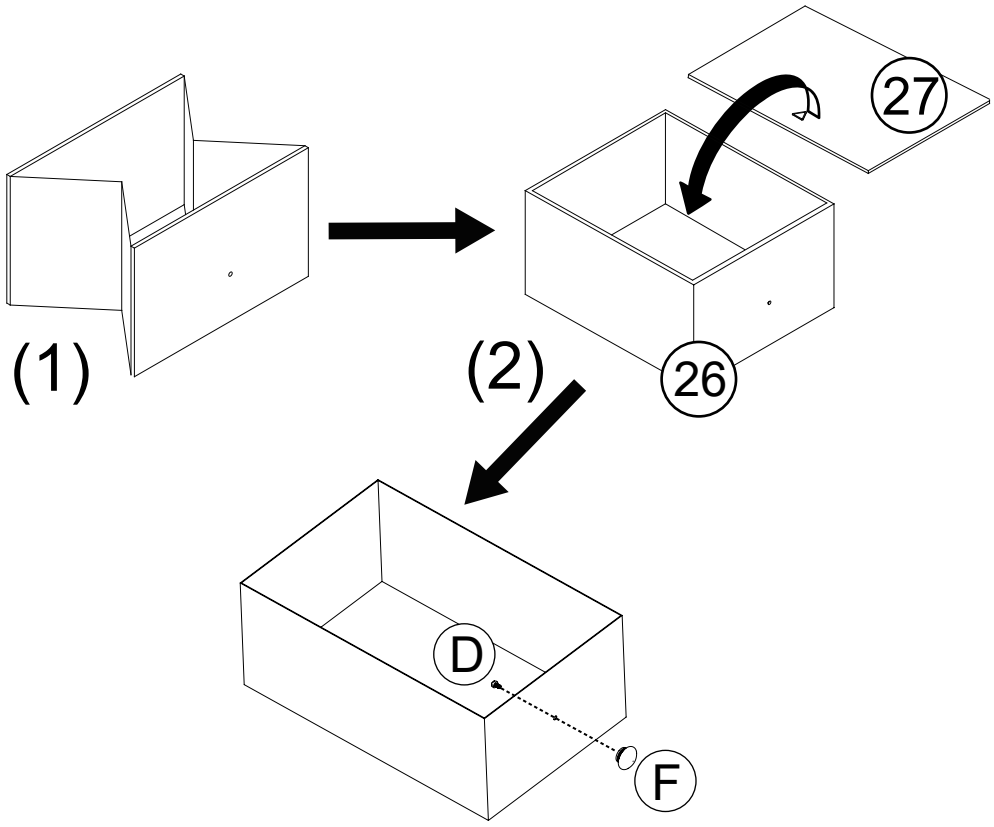

42

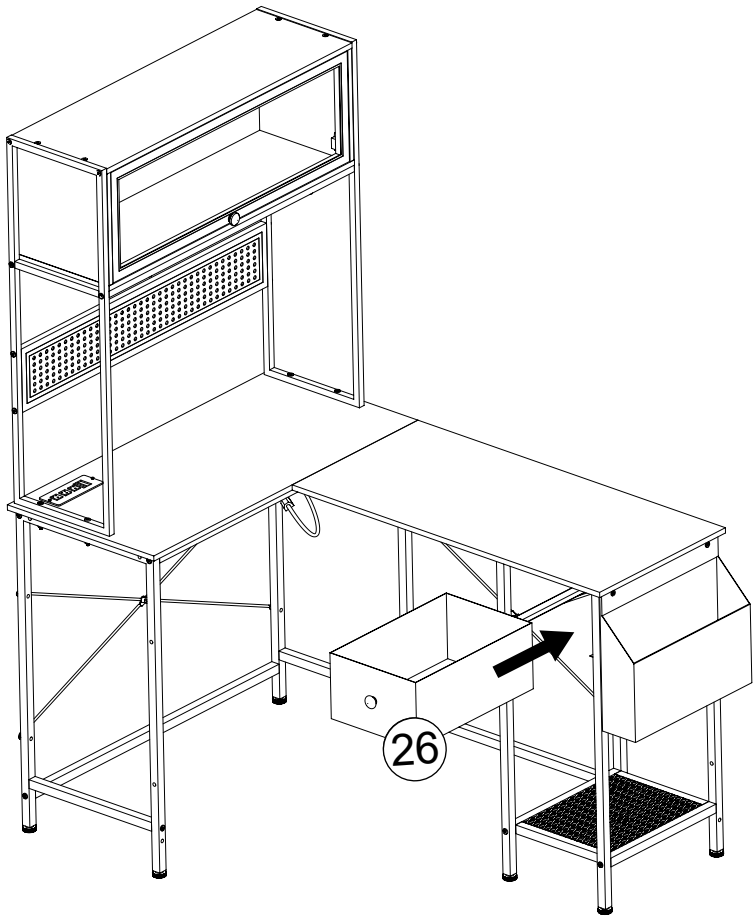

43

R	S	J ST4*12
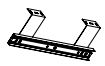		
1 PCS	1 PCS	8 PCS

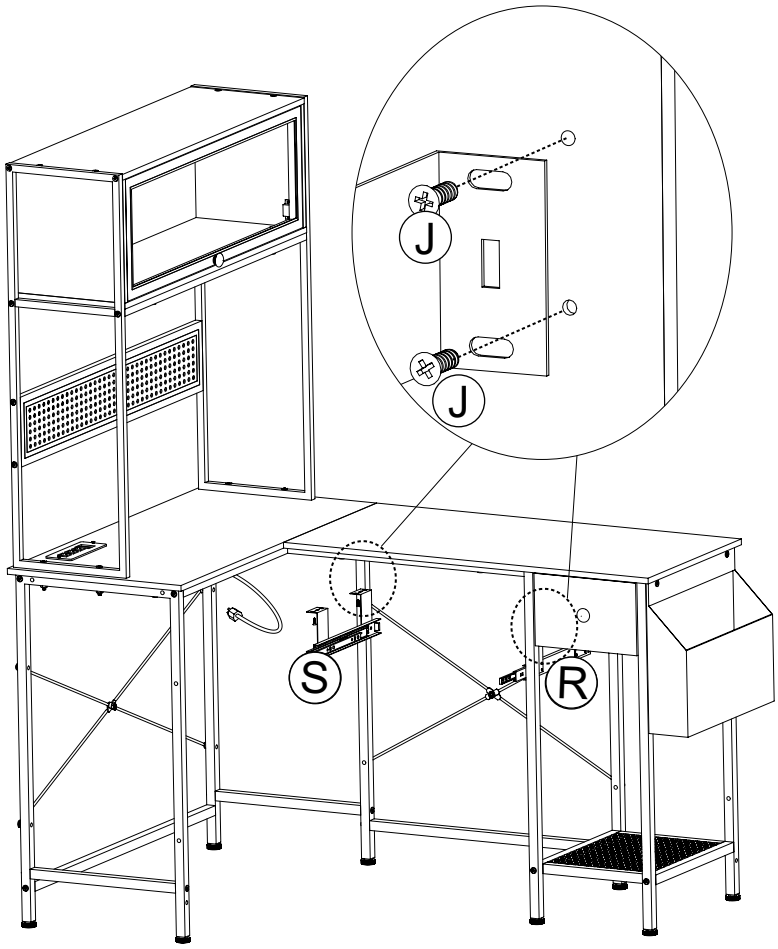

44

J ST4*12



4 PCS

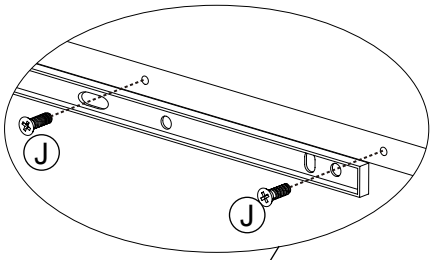

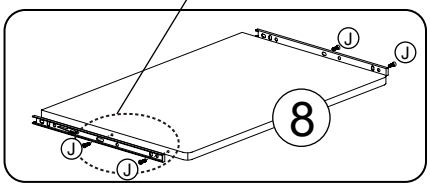

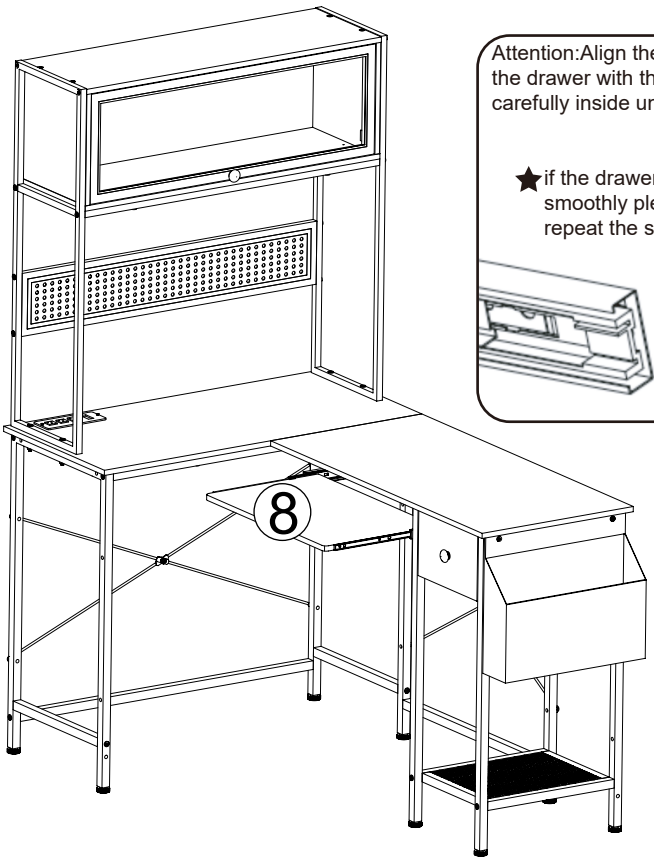

Attention:Align the slide runners on the drawer with the unit and push it carefully inside until it stops.

★if the drawer does not go in smoothly please take it out and repeat the step.

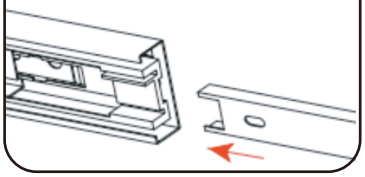

45

V	T
	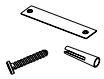
3 PCS	2 PCS

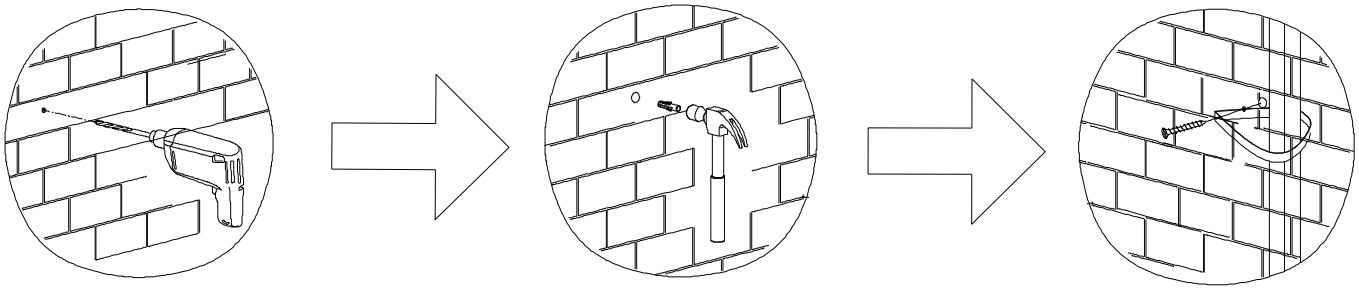

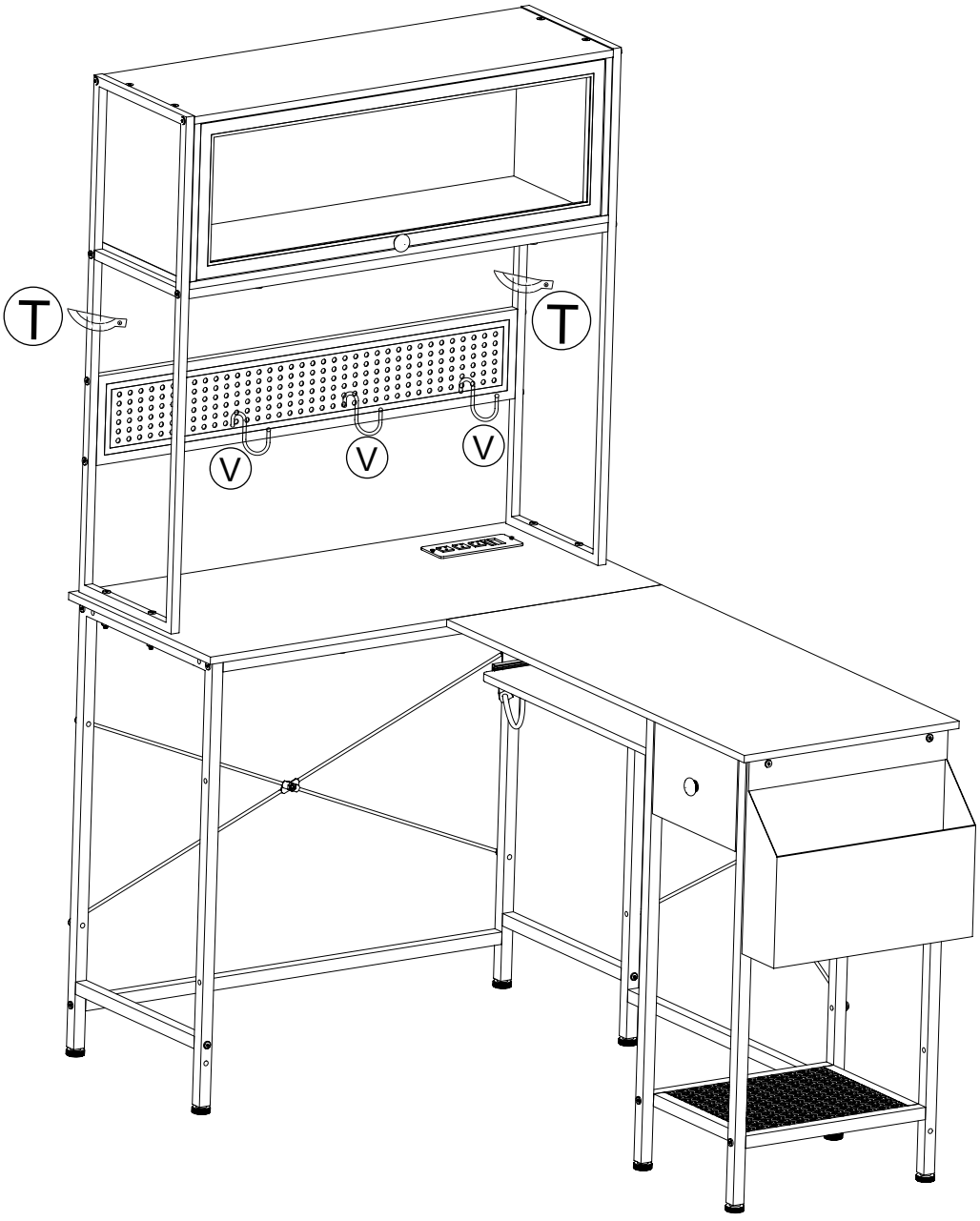

46

U M6*50	A M6*28
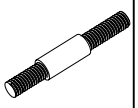	
1 PCS	2 PCS

Pay attention to product placement.

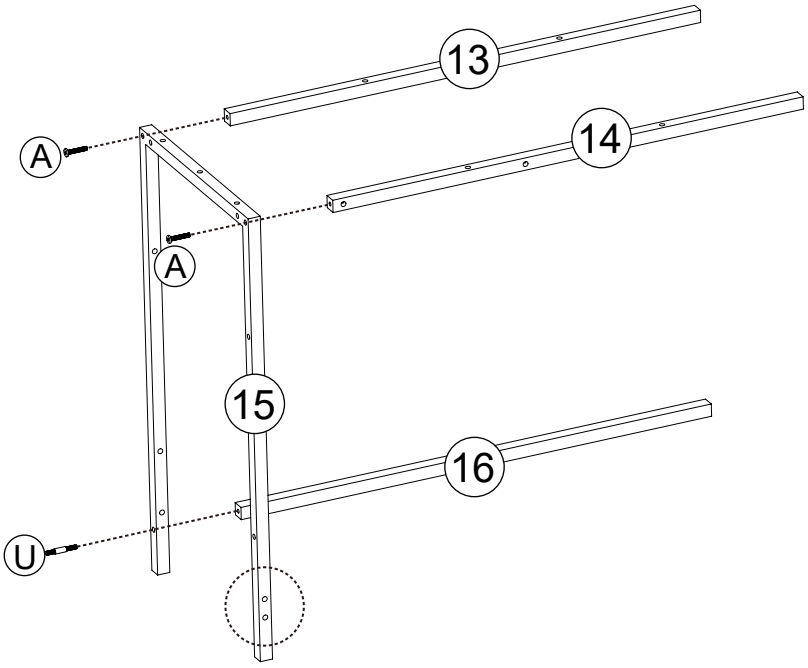

47

A M6*28

3 PCS

Pay attention to product placement.

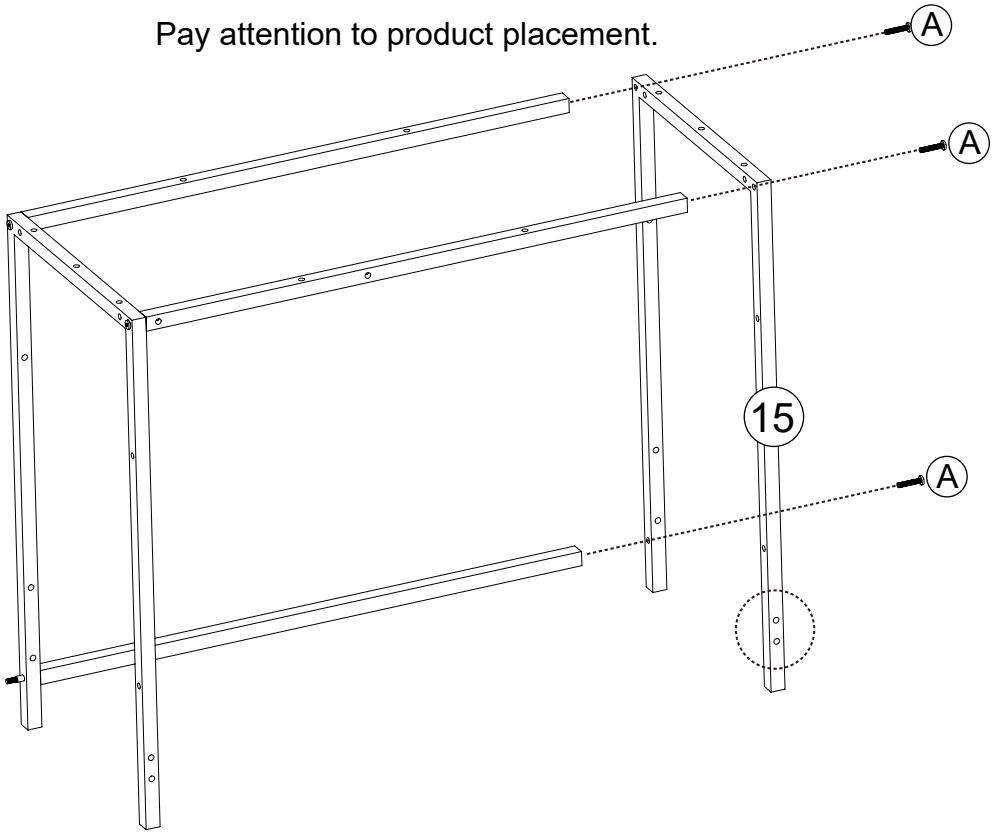

48

A M6*28

4 PCS

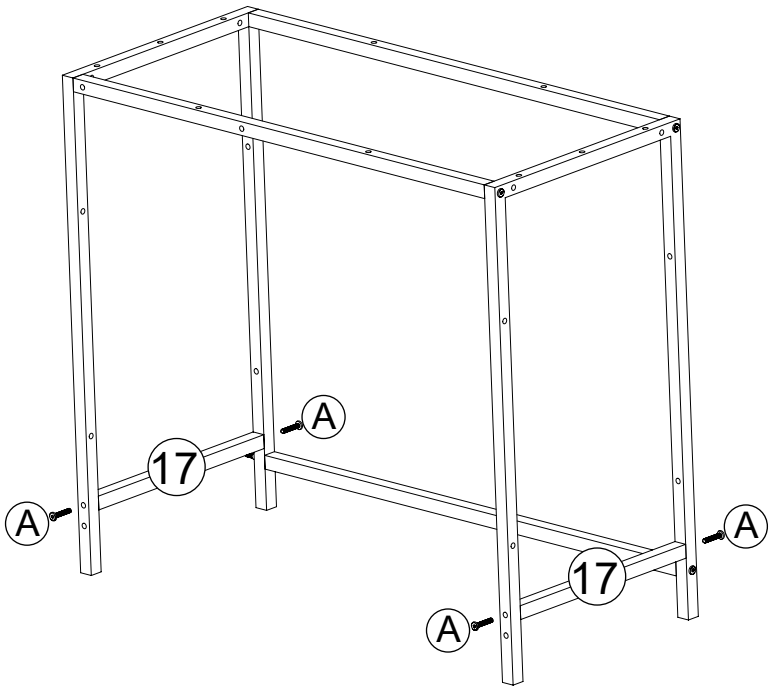

49

A M6*28



1 PCS

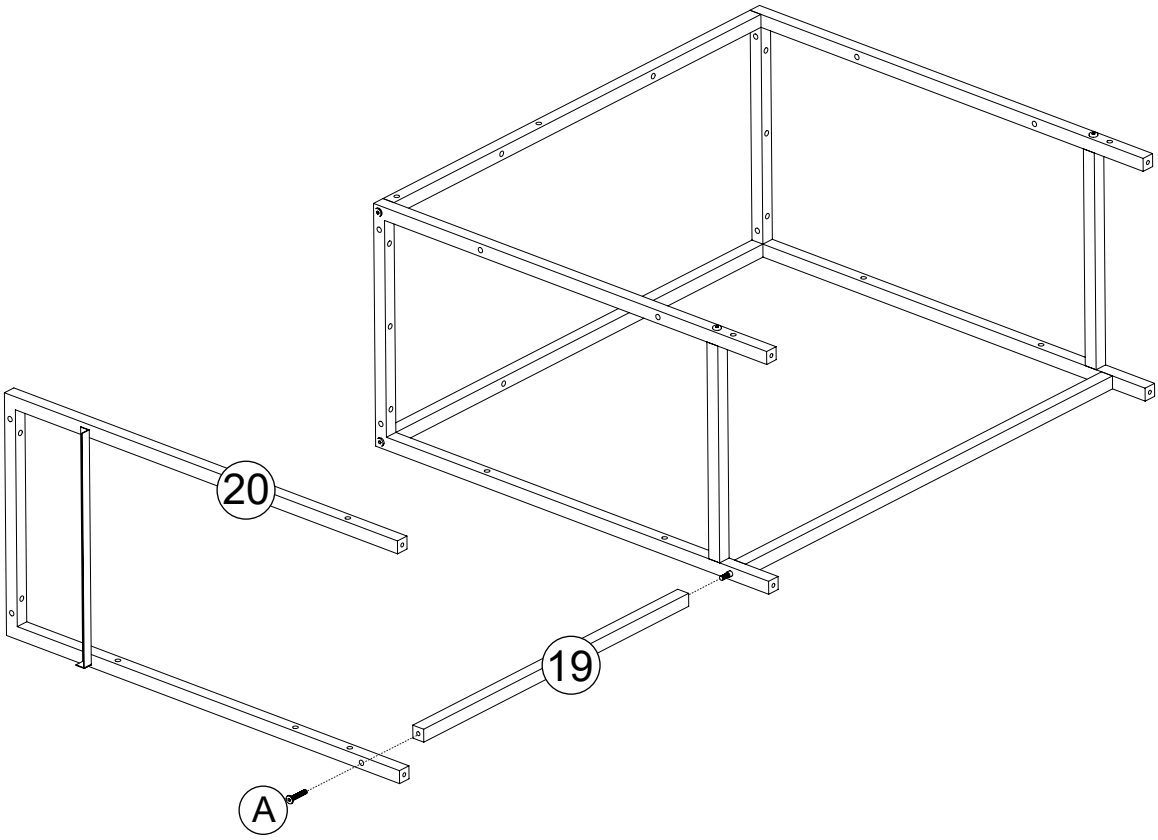

50

A M6*28

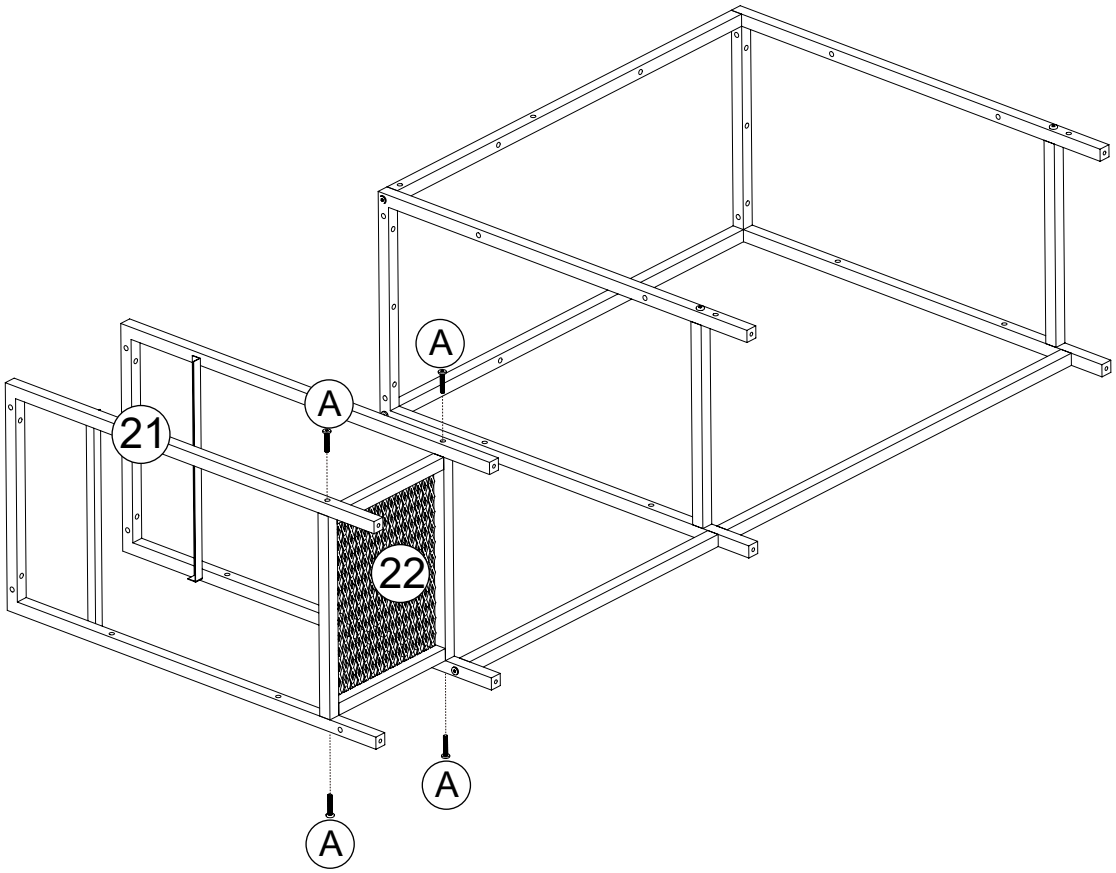

4 PCS

51

M M6

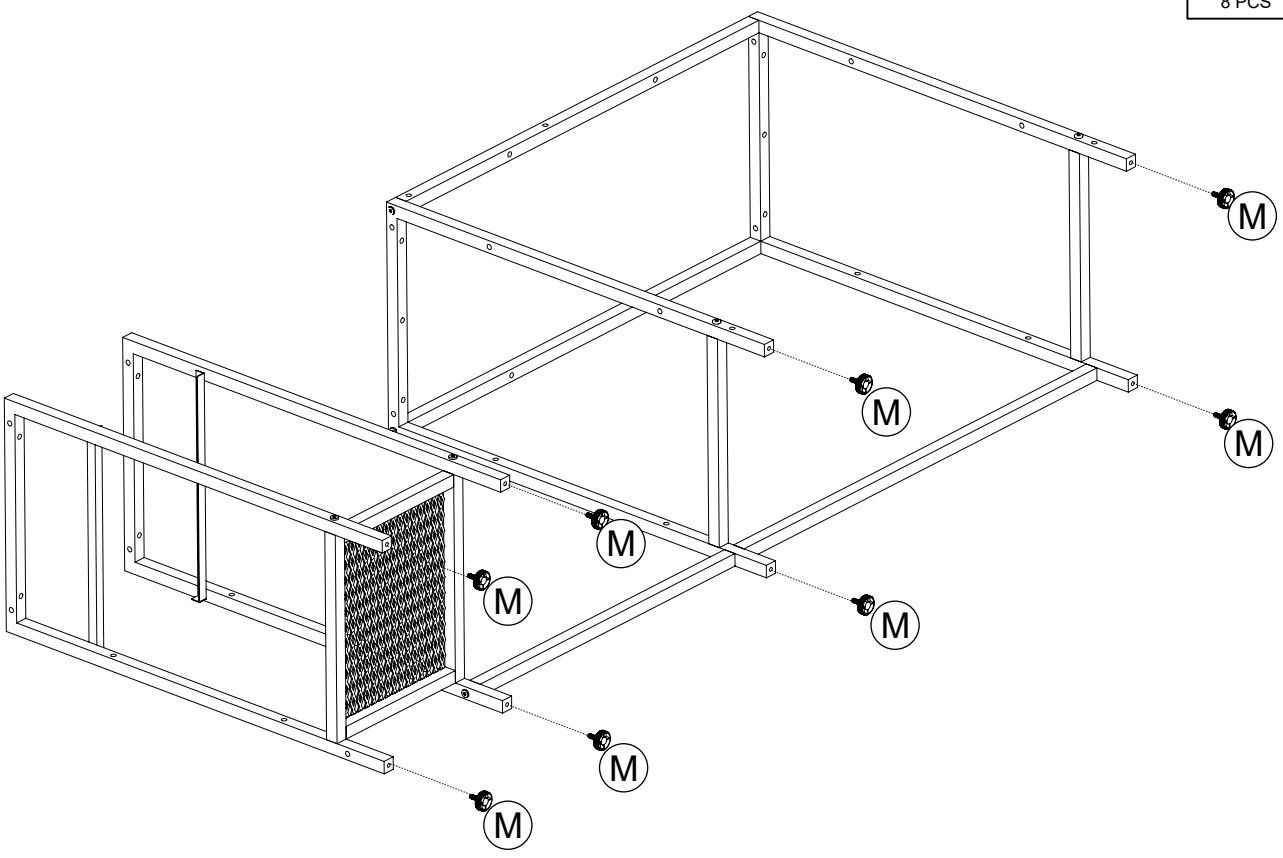

8 PCS

52

A M6*28



4 PCS

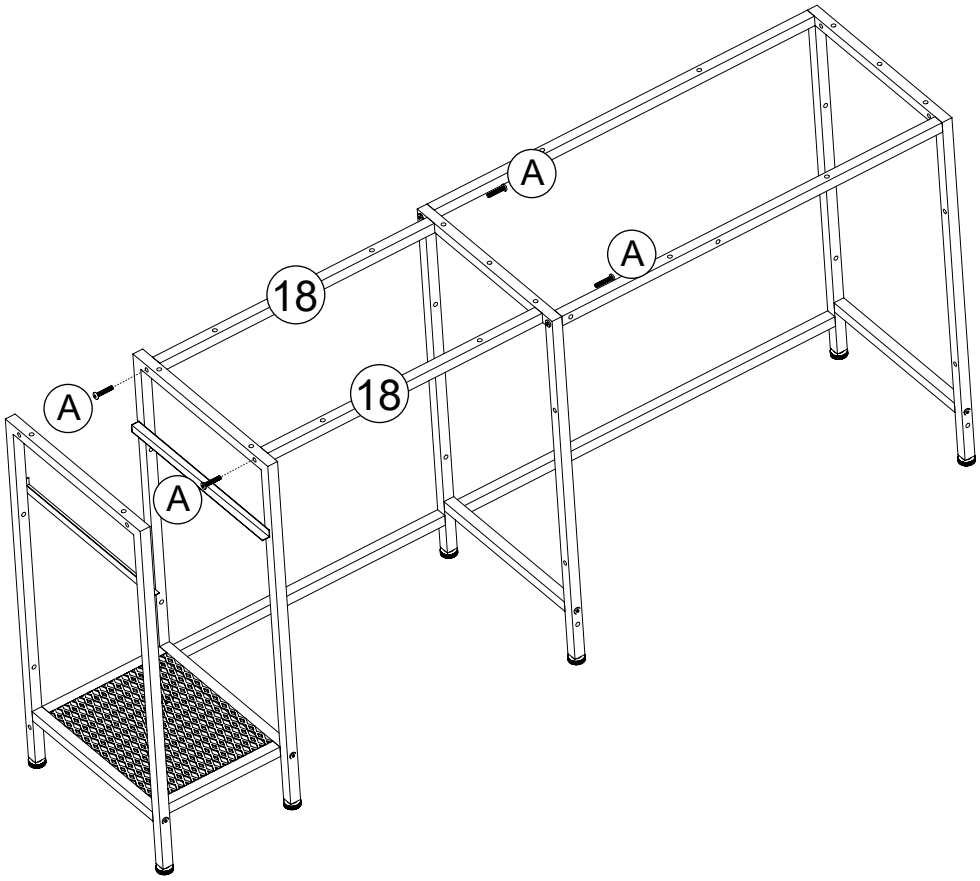

53

O



2 PCS

N M6*12



2 PCS

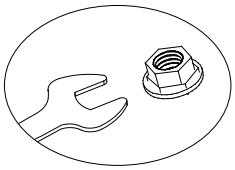

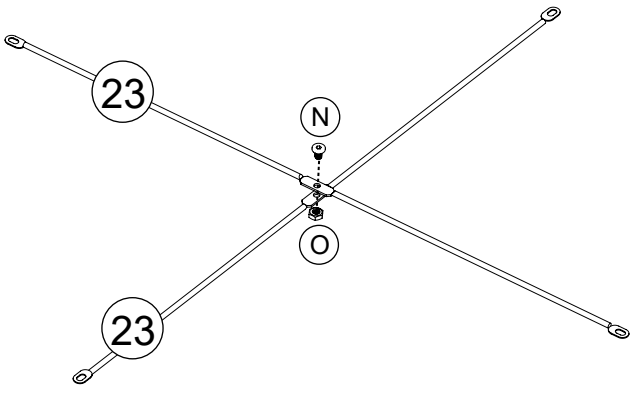

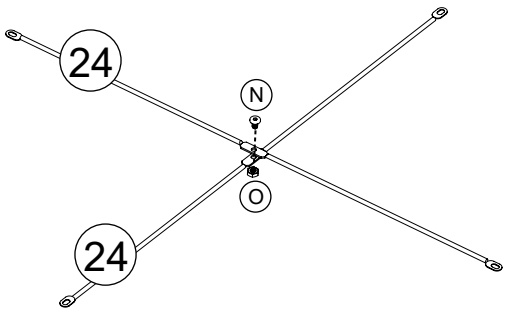

54

O M6	A M6*28
	
6 PCS	6 PCS

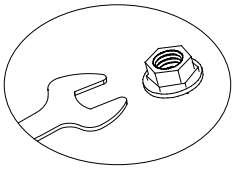

55

O M6	A M6*28
	
2 PCS	2 PCS

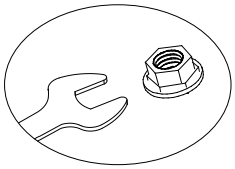

56

A M6*28

14 PCS

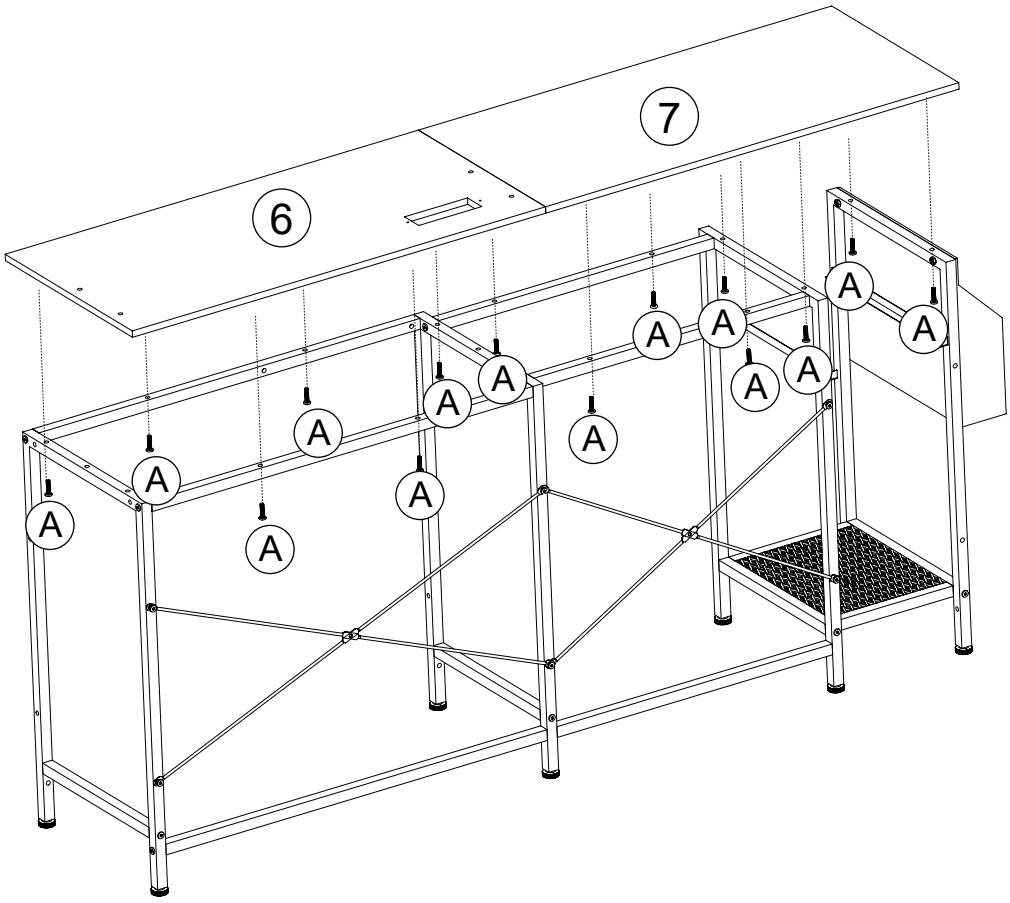

57

P	J ST4*12
	
1 PCS	2 PCS

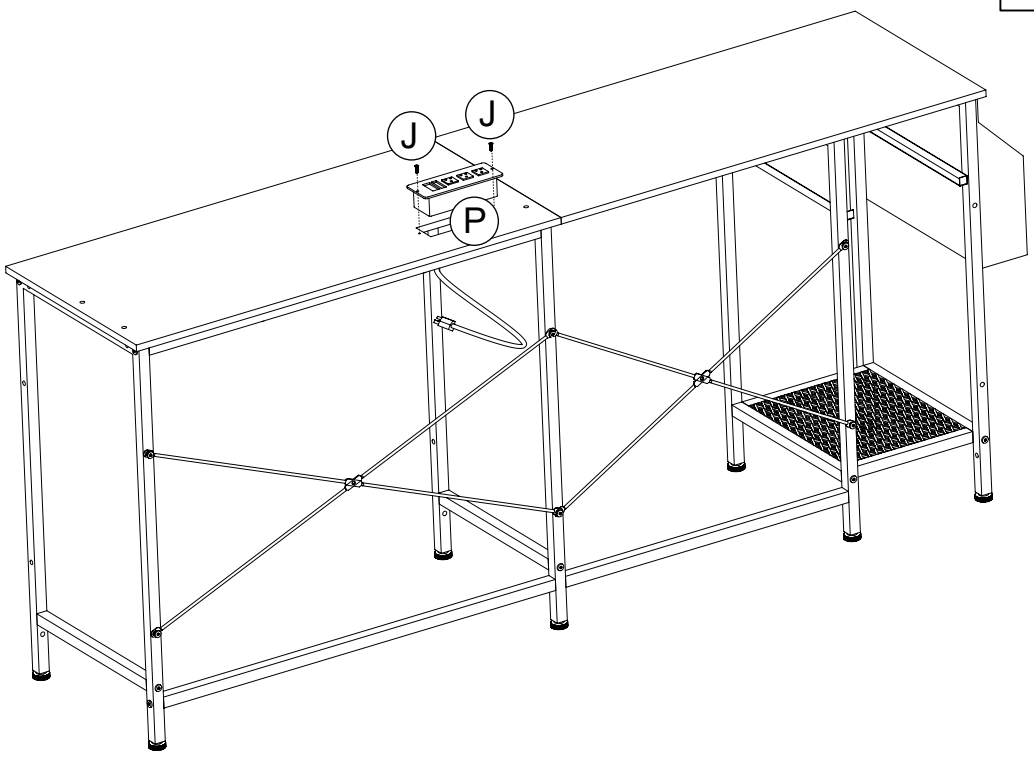

58

O M6	Q M6*55
	
4 PCS	4 PCS

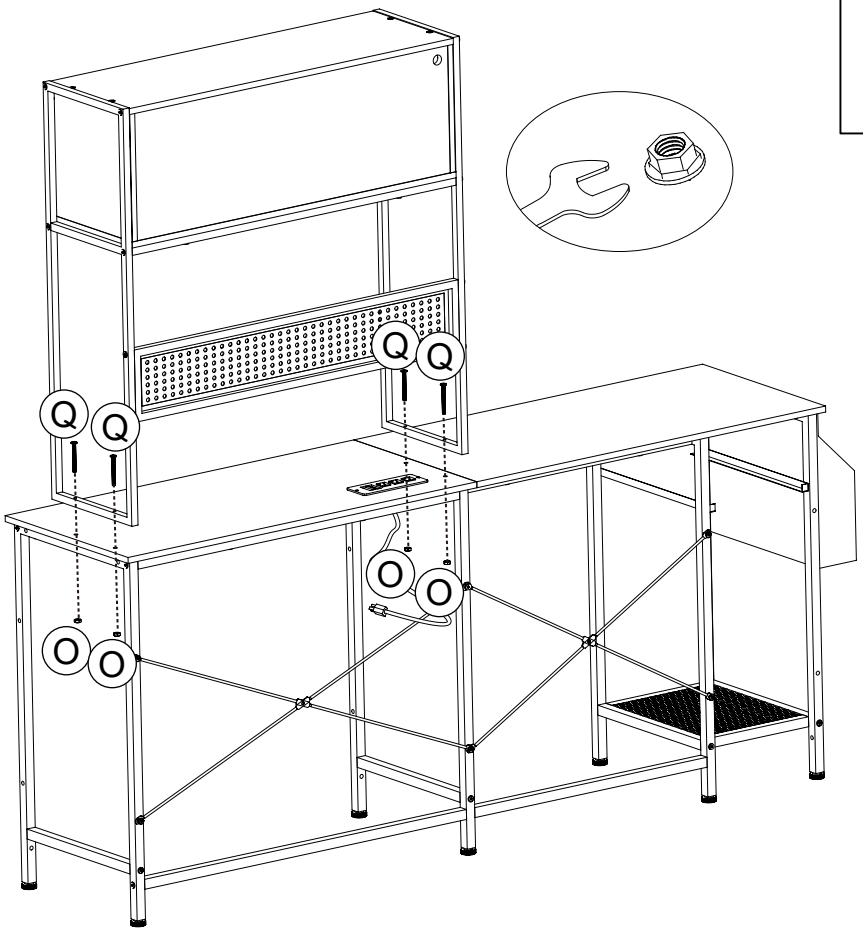

59

R	S	J ST4*12
		
1 PCS	1 PCS	8 PCS

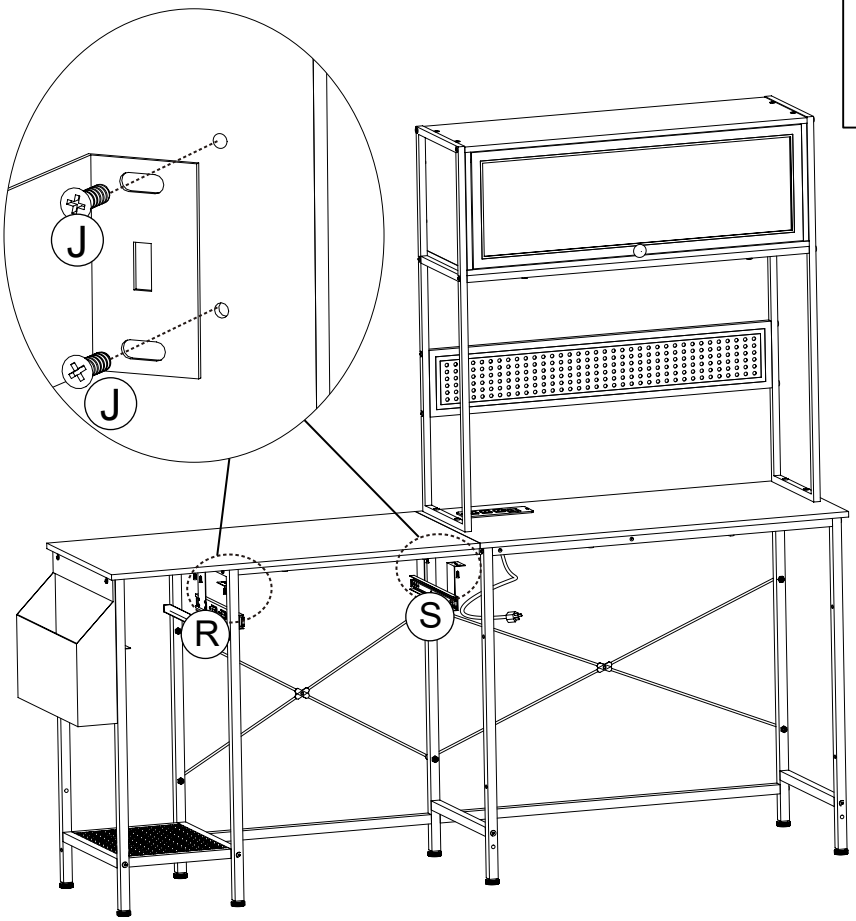

60

J ST4*12

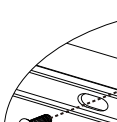

4 PCS

Attention:Align the slide runners on the drawer with the unit and push it carefully inside until it stops.

★if the drawer does not go in smoothly please take it out and repeat the step.

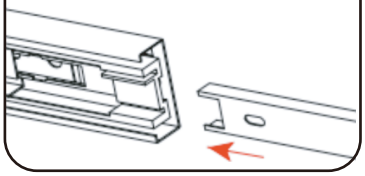

61

F



1 PCS

D M4*12



1 PCS

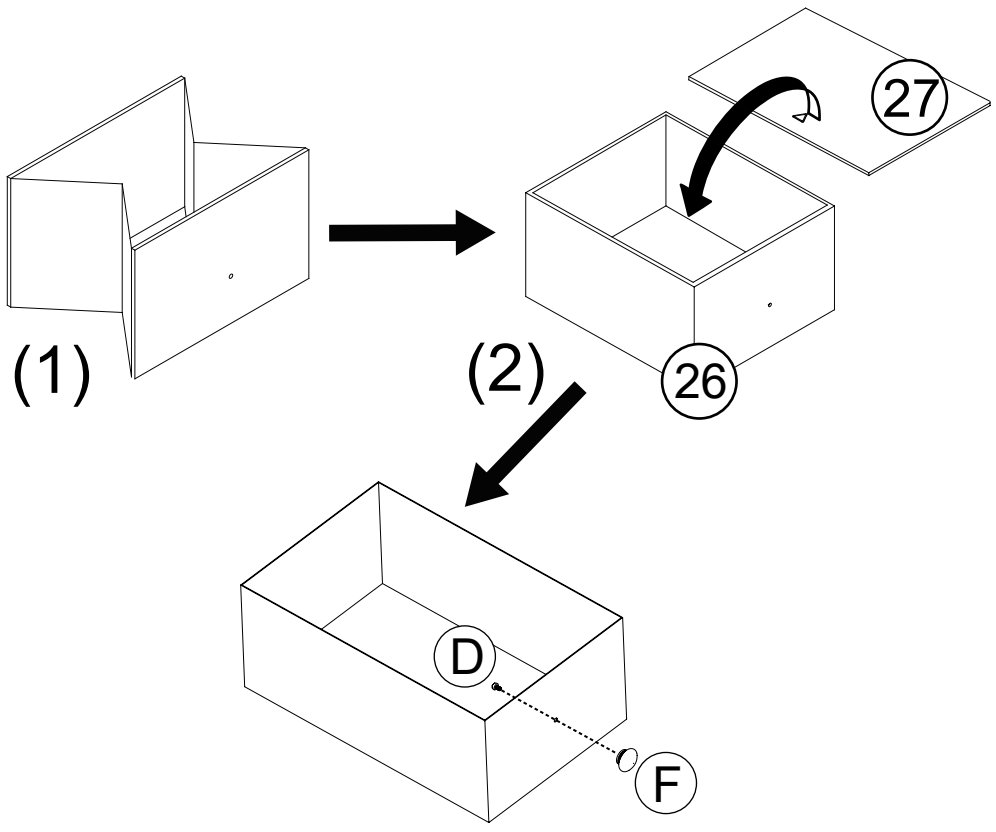

62

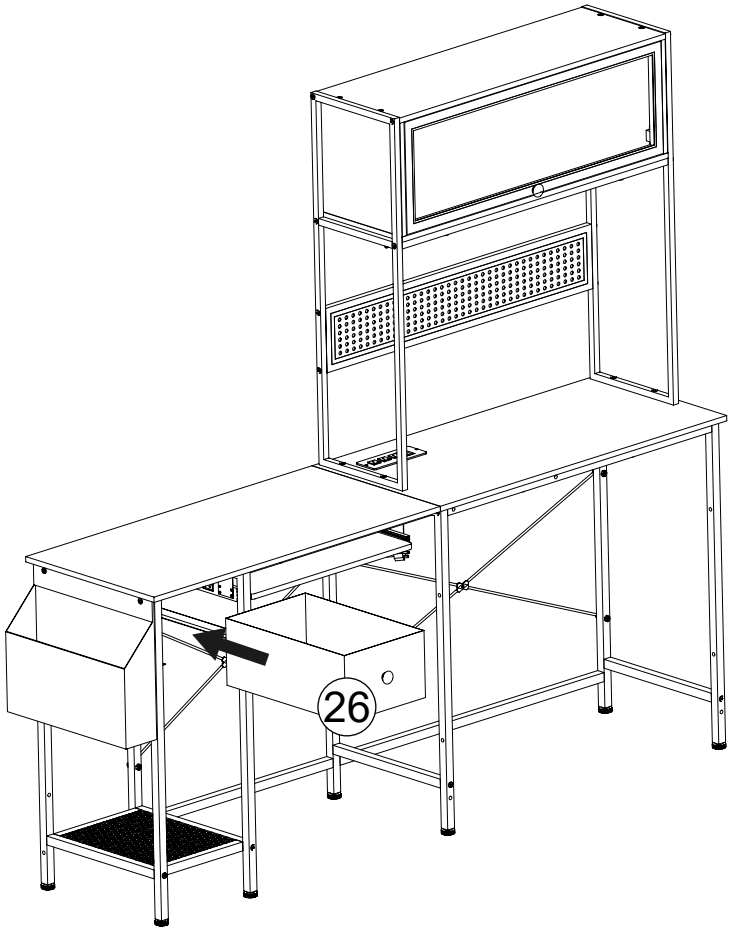

63

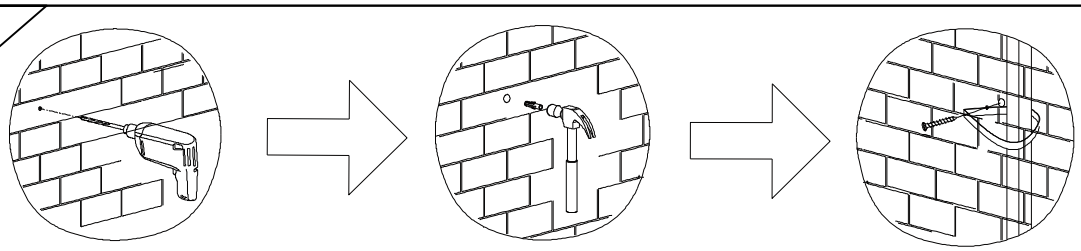

V	T
 3 PCS	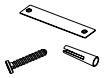 2 PCS

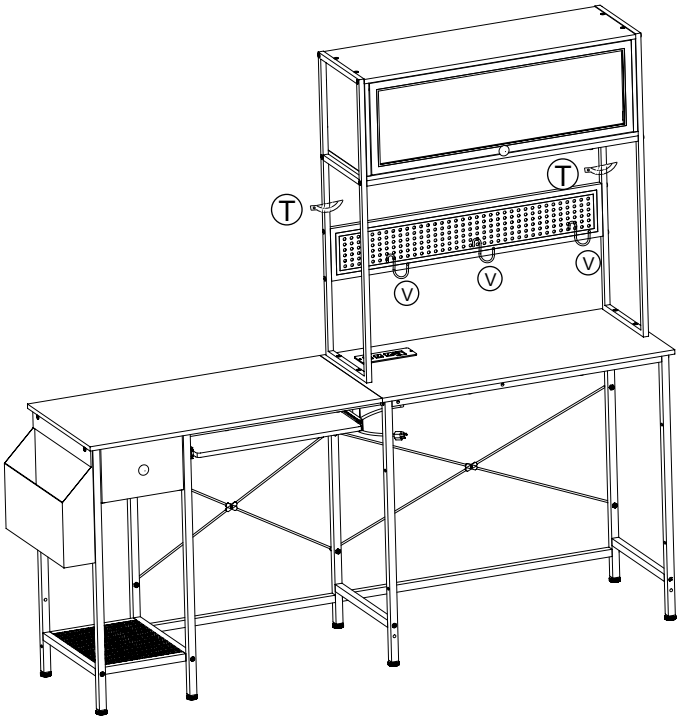

64

U M6*50	A M6*28
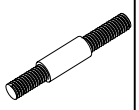	
1 PCS	2 PCS

Pay attention to product placement.

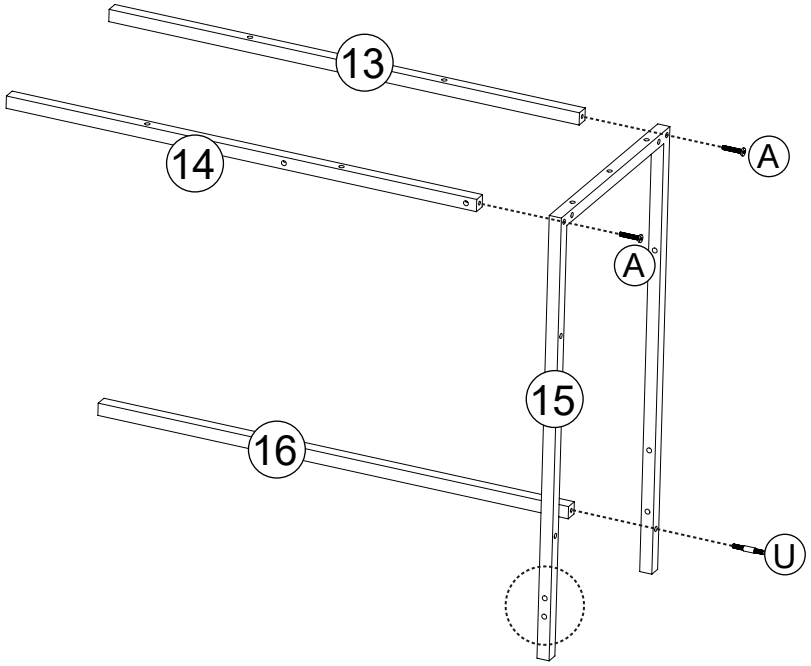

65

A M6*28

3 PCS

Pay attention to product placement.

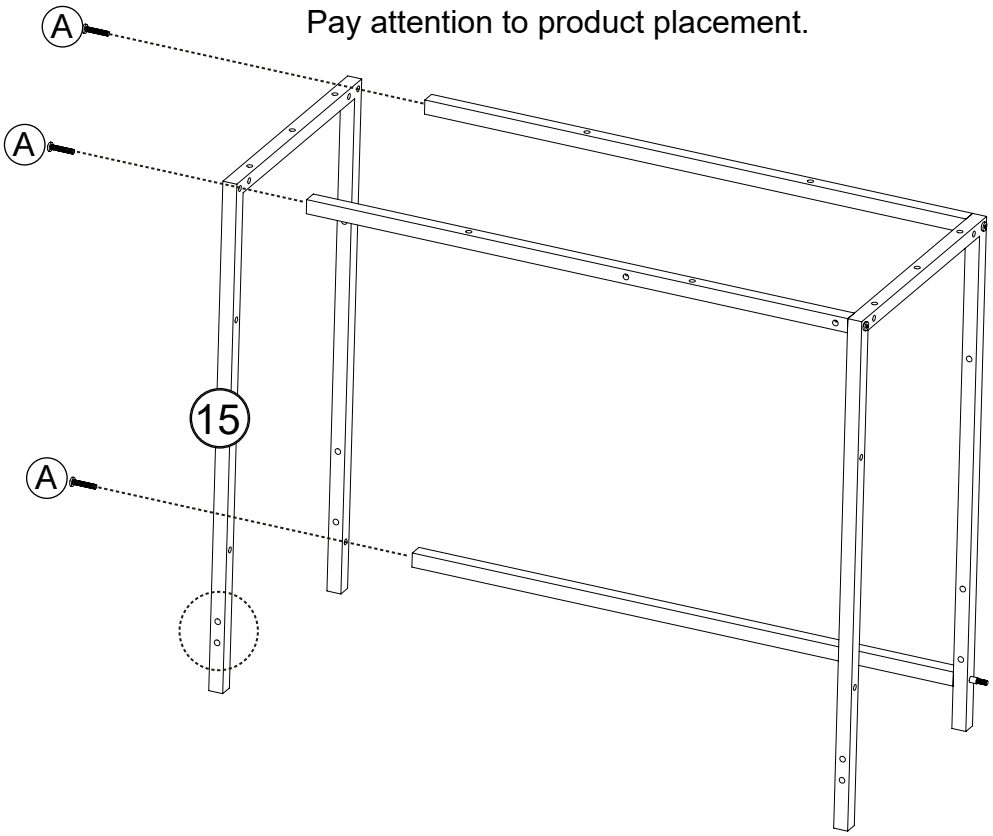

66

A M6*28



4 PCS

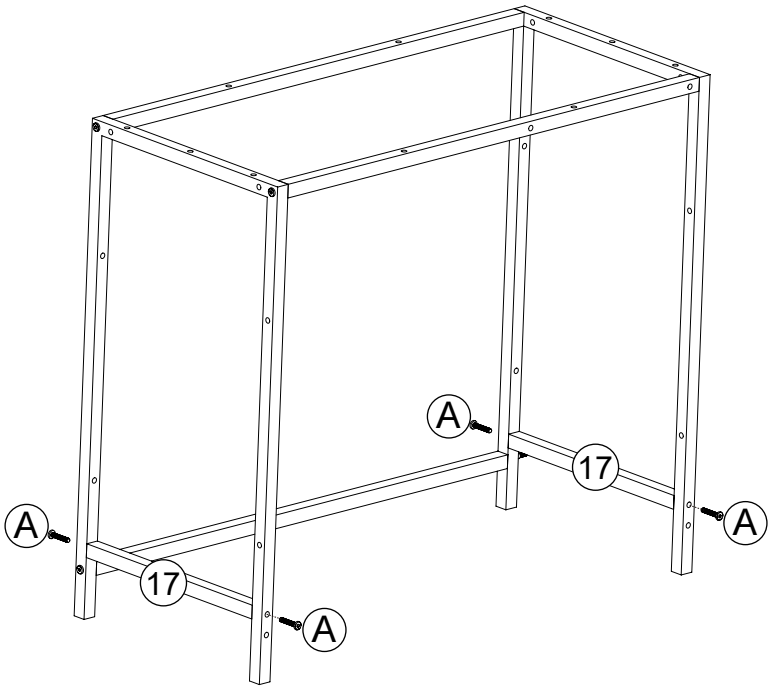

67

A M6*28

1 PCS

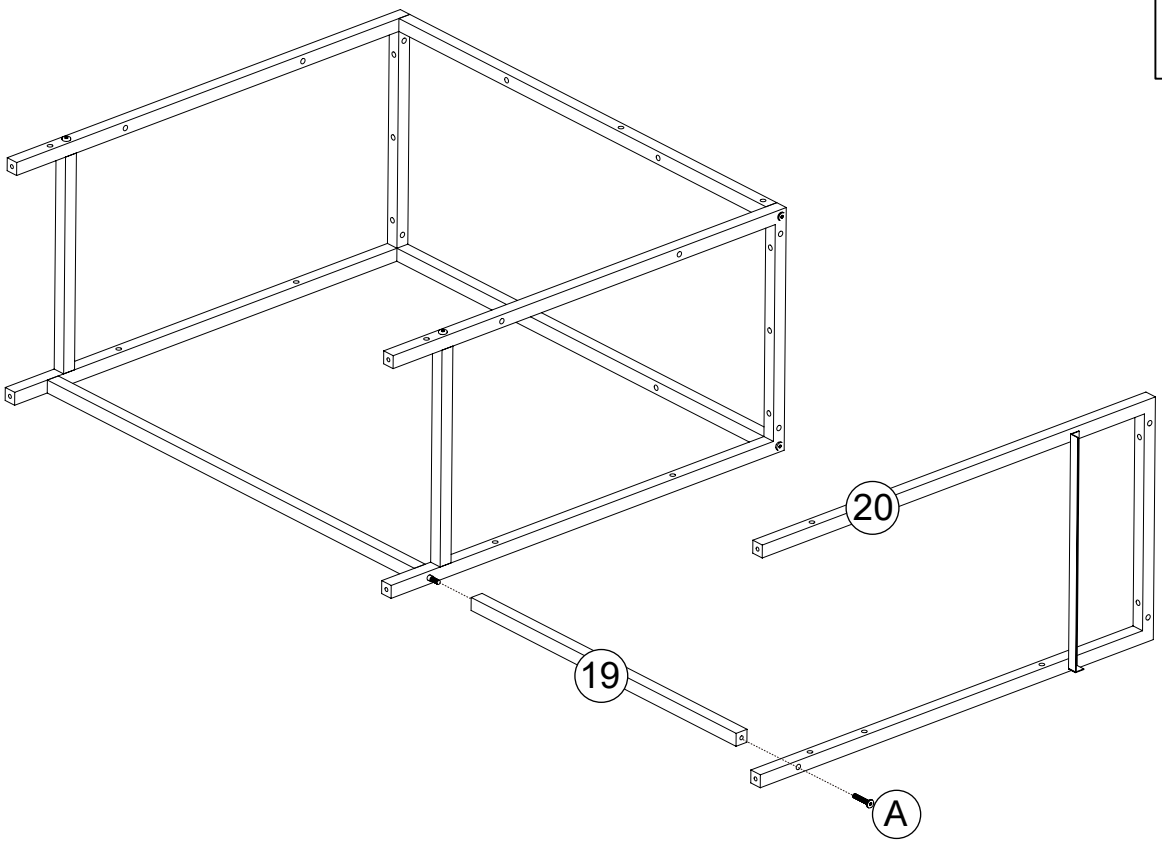

68

A M6*28

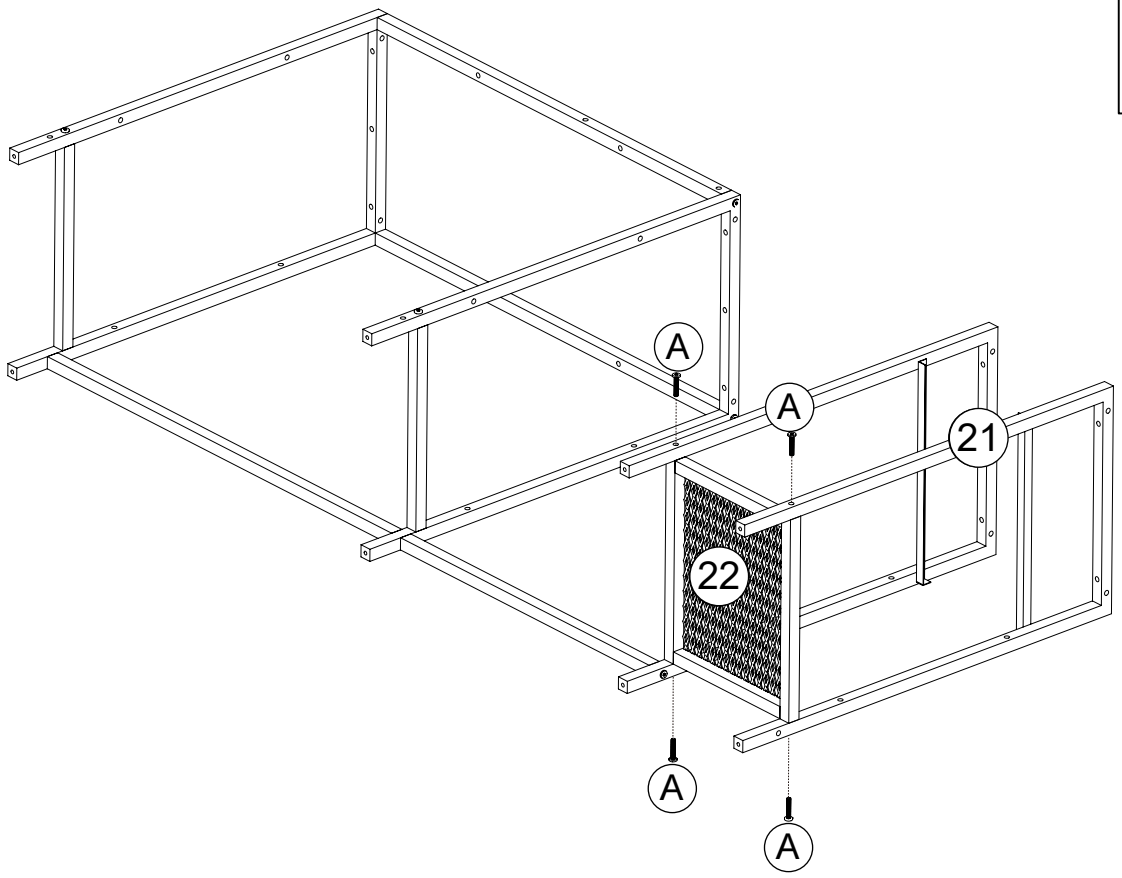

4 PCS

69

M M6

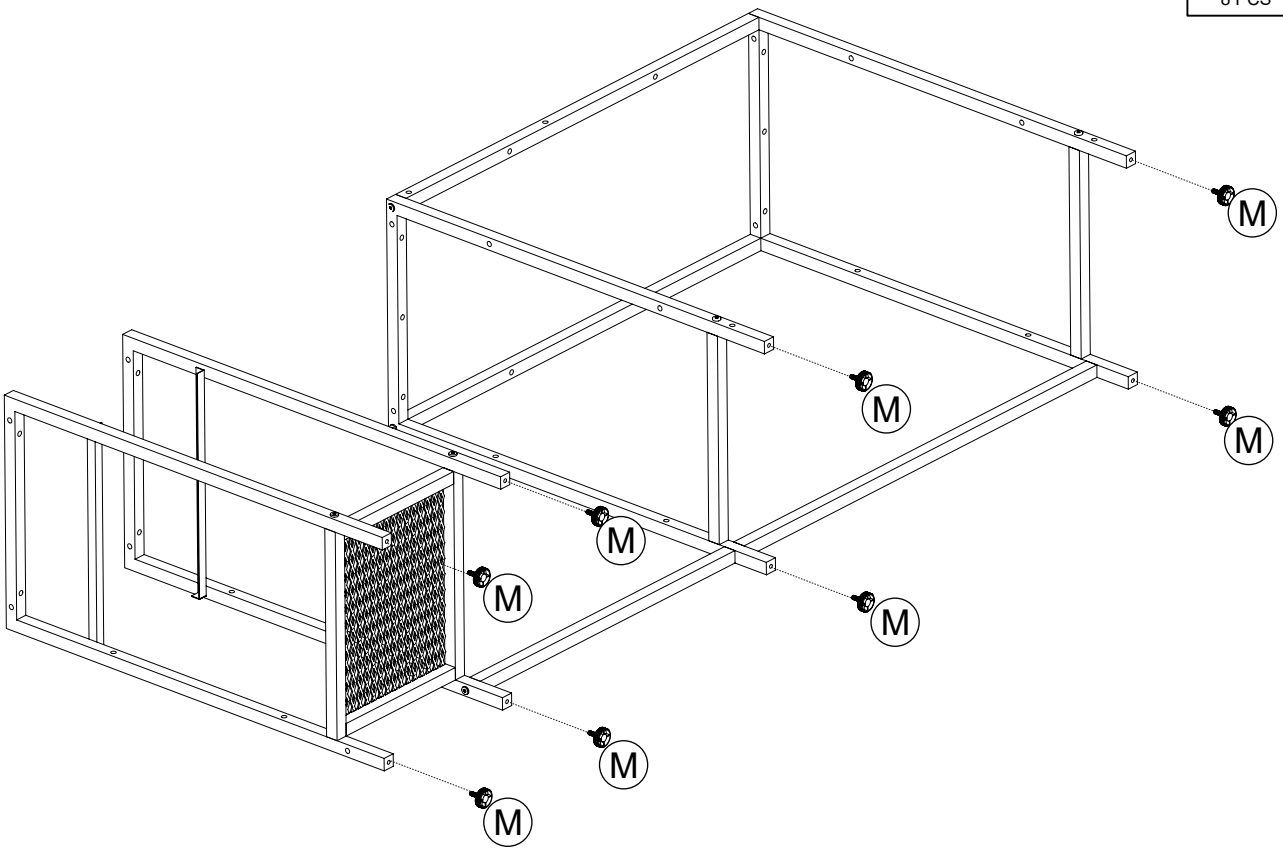

8 PCS

70

A M6*28

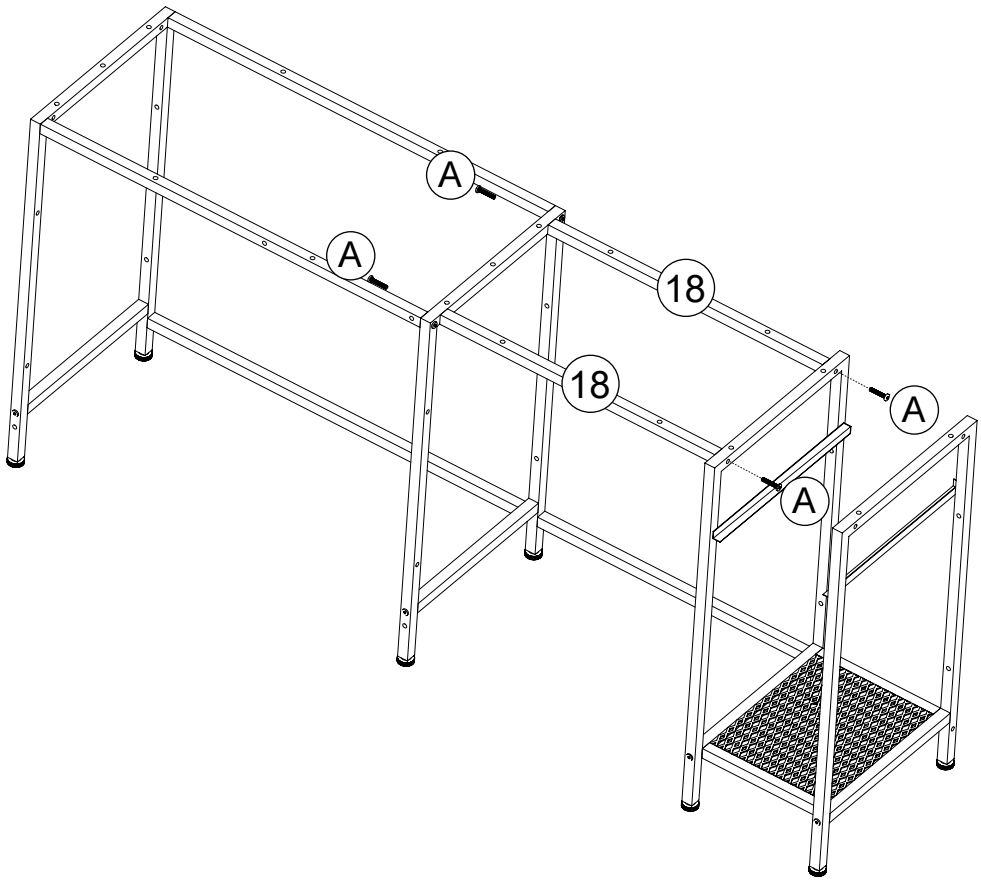

4 PCS

71

O



2 PCS

N M6*12



2 PCS

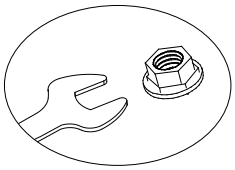

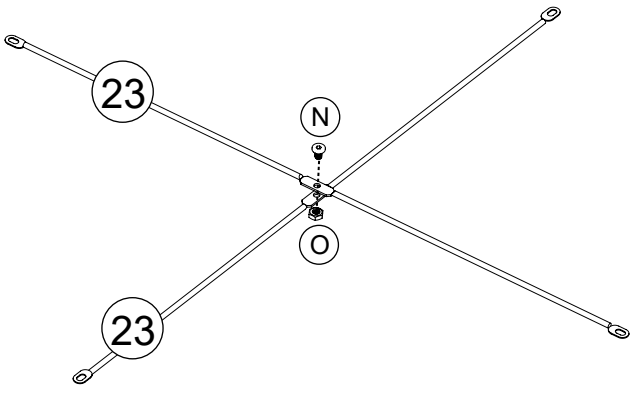

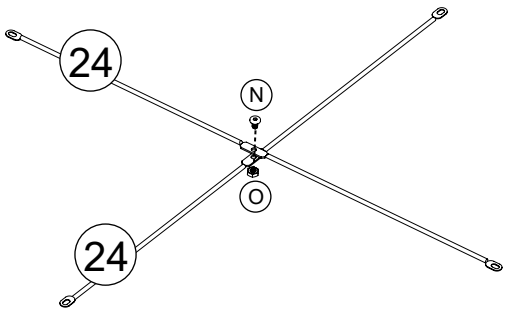

72

O M6	A M6*28
	
6 PCS	6 PCS

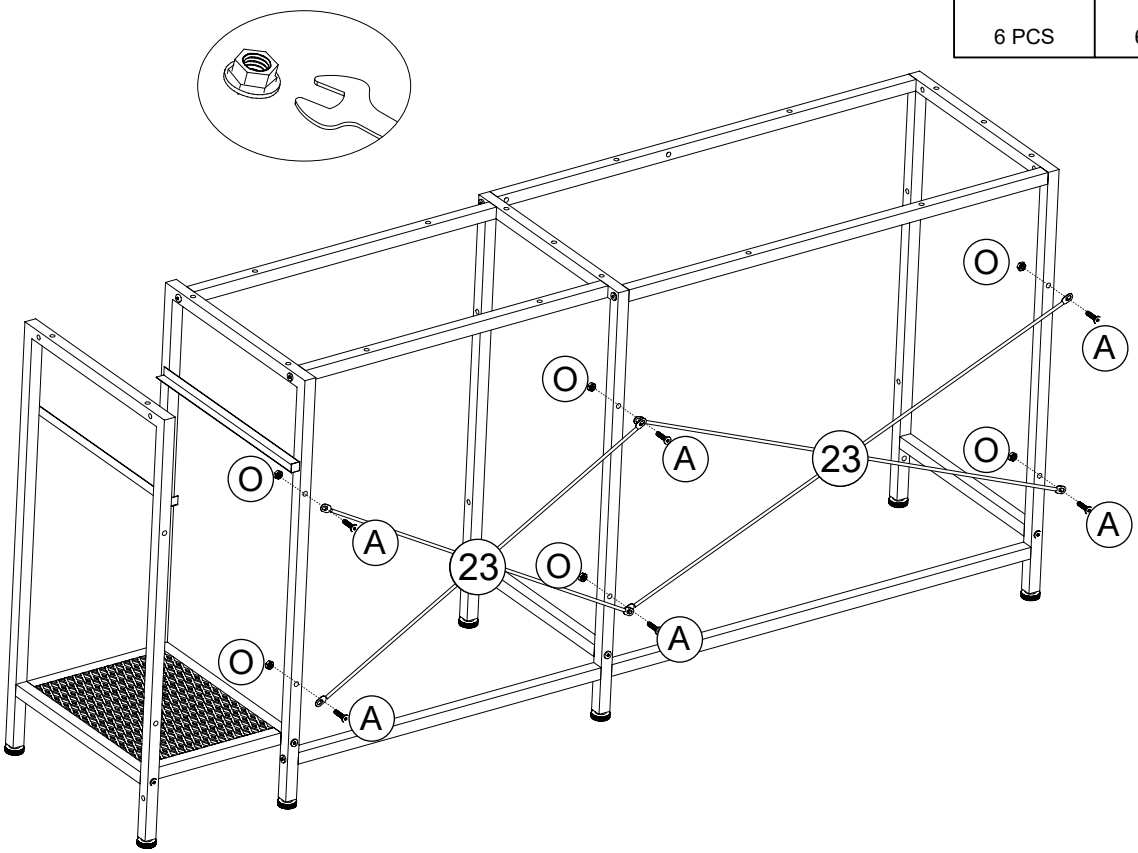

73

O M6	A M6*28
	
2 PCS	2 PCS

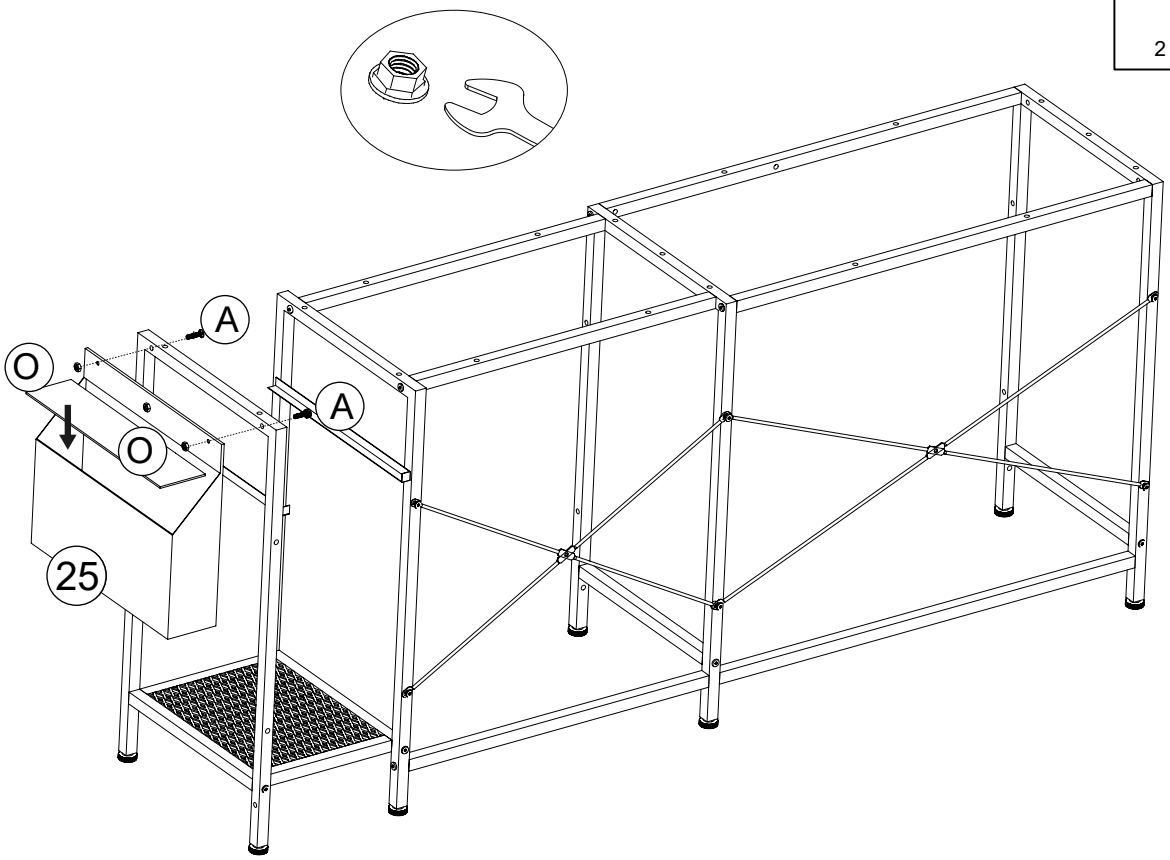

74

A M6*28



14 PCS

75

P



1 PCS

J ST4*12



2 PCS

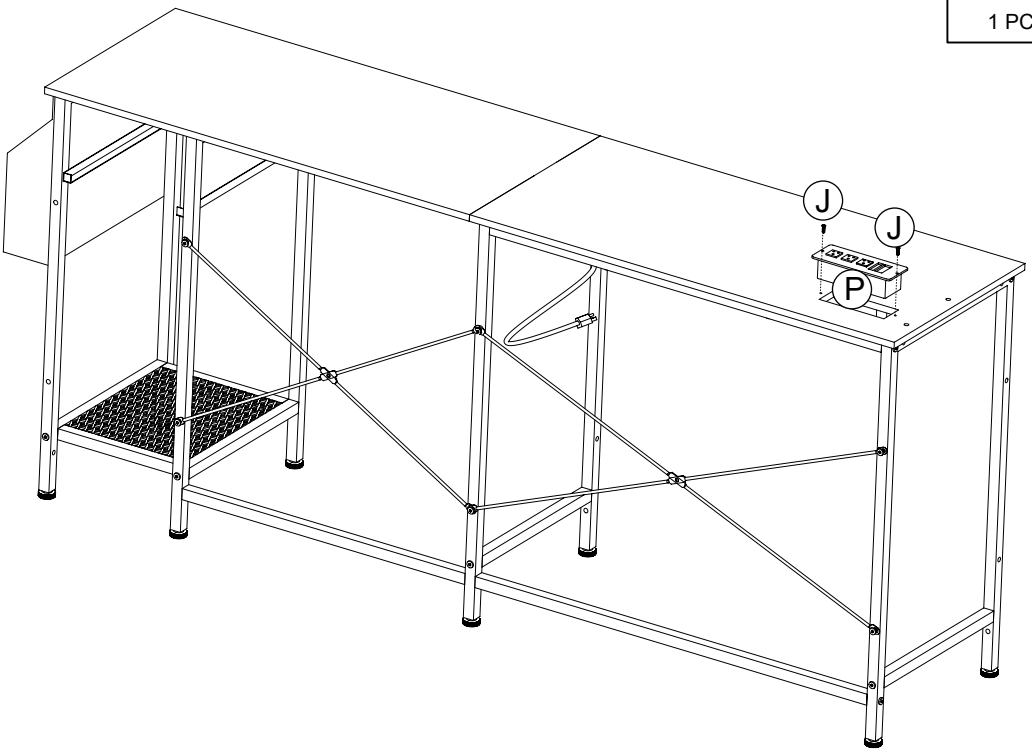

76

O M6	Q M6*55
4 PCS	4 PCS

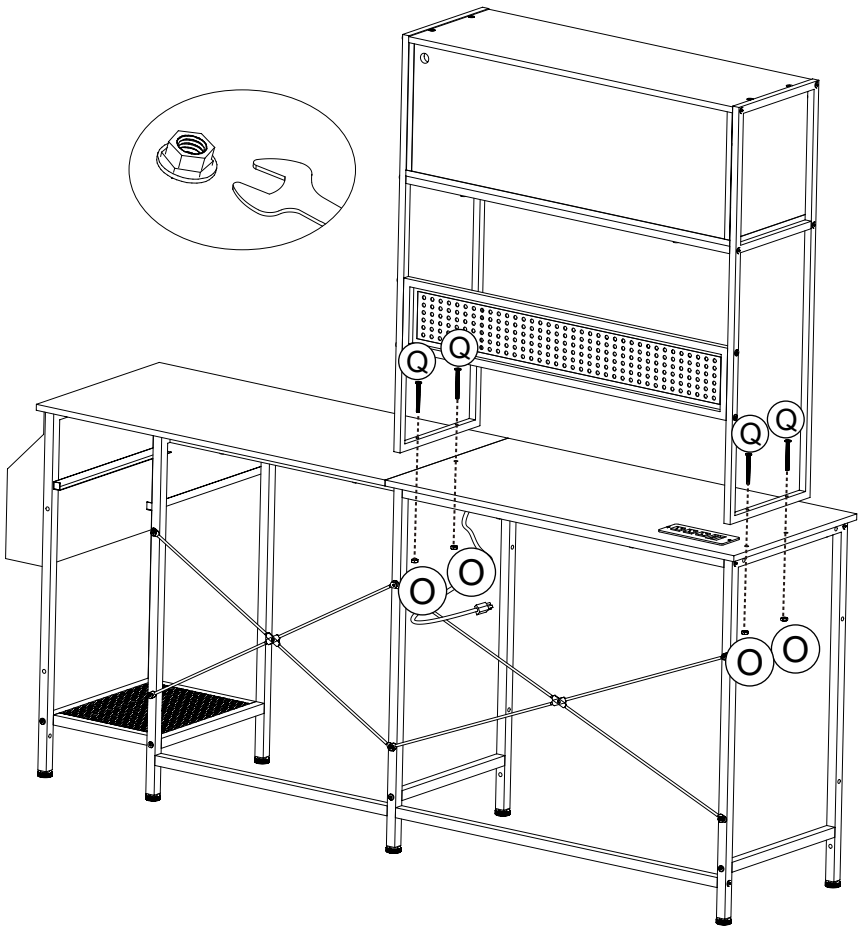

77

R	S	J ST4*12
1 PCS	1 PCS	8 PCS

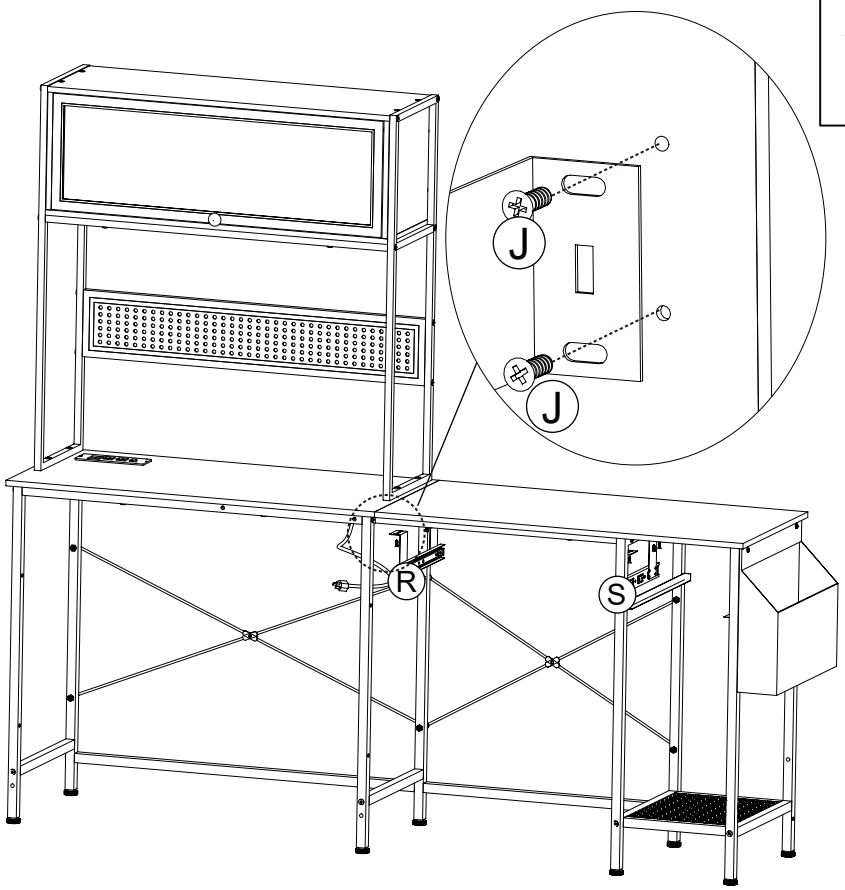

78

J ST4*12



4 PCS

Attention:Align the slide runners on the drawer with the unit and push it carefully inside until it stops.

★if the drawer does not go in smoothly please take it out and repeat the step.

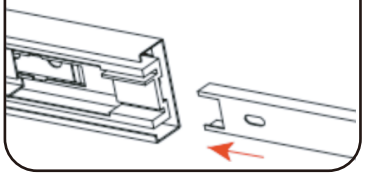

79

F



1 PCS

D M4*12



1 PCS

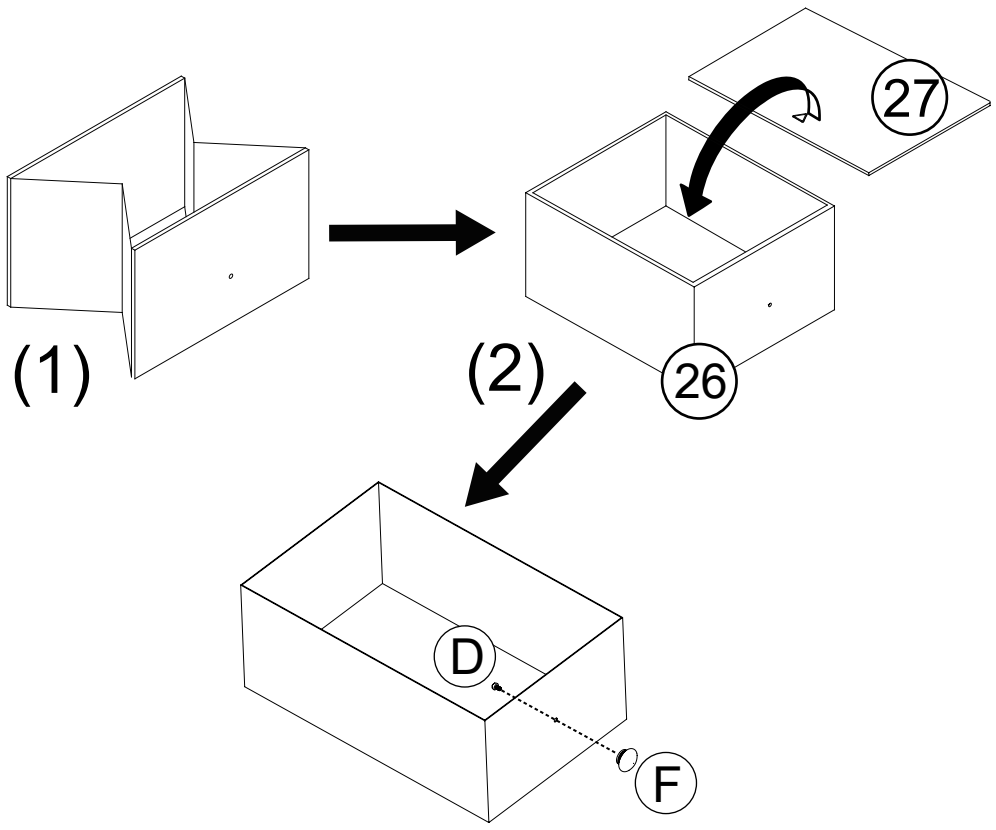

80

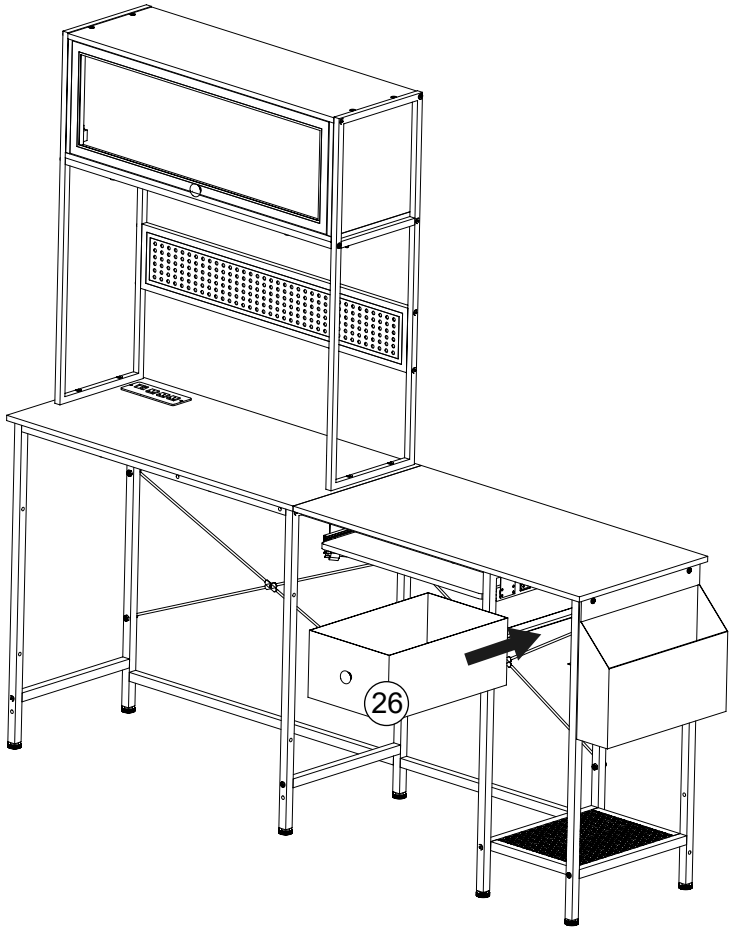

81

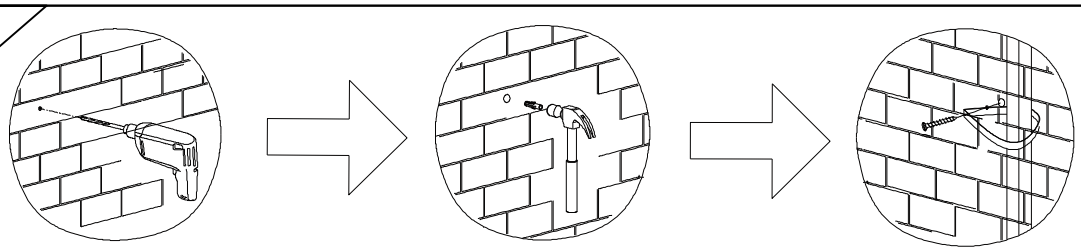

V	T
 3 PCS	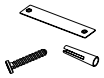 2 PCS

