DREAMS IDEA

Instruction Manual



DREAMS IDEA

NO.CH0074

ABOUT US

DREAMSIDEA IS A ONE-STOP HOME

FURNISHING AND SERVICE COMPANY BASED IN USA.

WE ARE DEDICATED TO BRING YOUR DREAM HOME TO LIFE.

OUR SERVICES COVER FROM DESIGN, PRODUCTION,

DIRECT SELL, STORAGE, AND TRANSPORTATION.

IF REALITY IS THE NEAR SHORE

AND IDEALISM THE FAR SHORE,

DREAMSIDEA

AS THE FERRY BETWEEN THEM,

EAGER TO ACCOMPANY YOU ON A JOURNEY

TO YOUR IDEAL HOME.

ITEM NO.CH0074

WARRANTY

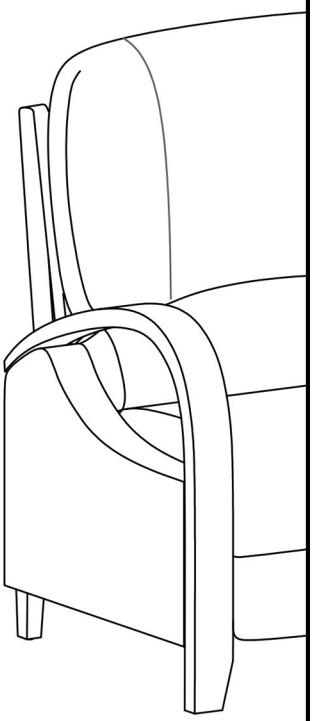

We strive to offer high quality product and we also try our best to satisfy each customer that order from us, no matter on products or services as needed. Each customer receives a record of their order, such as the order number or item receipt. For any items that are out of warranty period, you may still be able to purchase the replacement parts from our company if they are available.

Are you having difficulty
with assembly? Missing parts?
E-mail:support@dreamsidea.com
Tel:+1-562-510-9089

send an email with your order No. to us
For return, please check the return policy with the retailer or platforms you bought from.
Appreciate your purchasing from us.
Pop up your life by our furniture !

MAINTENANCE AND WARNING

Please read the manual thoroughly before you start installing.

Please keep the product away from sharp object.

Packaging and small parts may have chocking hazard, please keep them away from children and pets.

Please clean the product according to each clean code, check the product description for more information.

Please keep the product away from fire.

If you have any other questions, please contact us, we will be glad to help you out.

If the product is placed under direct sunlight, the pattern or color might fade away overtime.

Check the product periodically to make sure everything is secured and tightened.

Always use proper tools for installation.

Do not jump on the product.





One people





Around 35 min

PRODUCT DESCRIPTION

Smooth, minimalist design with a one-piece silhouette. The lines are soft and flowing with no sharp corners. The thick arms seamlessly blend into the plump back, presenting a cozy, safe, and modern minimalist style that easily fits into various home décors.

Layered Backrest Filling System: Features differentiated filling for the lumbar and back regions to enhance lumbar contouring and overall support efficiency.

A strongly styled statement piece. Its vintage form, natural fabric texture, and unique jacquard pattern allow it to easily become a focal point. Ideal for creating a reading nook or anchoring a living room, fostering a warm, nostalgic, and narrative home ambiance.

Integrated Weight-Activation, Safe and Effortless. The adjustment mechanism is triggered solely by body weight, with no exposed complex parts to prevent misuse. The wide leg stance and low center of gravity ensure stability and anti-tip safety even at maximum recline, for secure and worry-free use.

Composite wood and metal frame with solid wood legs. The main structure uses a combined wood and metal frame for the stability of wood and the strength of metal. The solid wood legs are sturdy, together ensuring overall structural stability and high load-bearing capacity.

EXPLODED VIEW

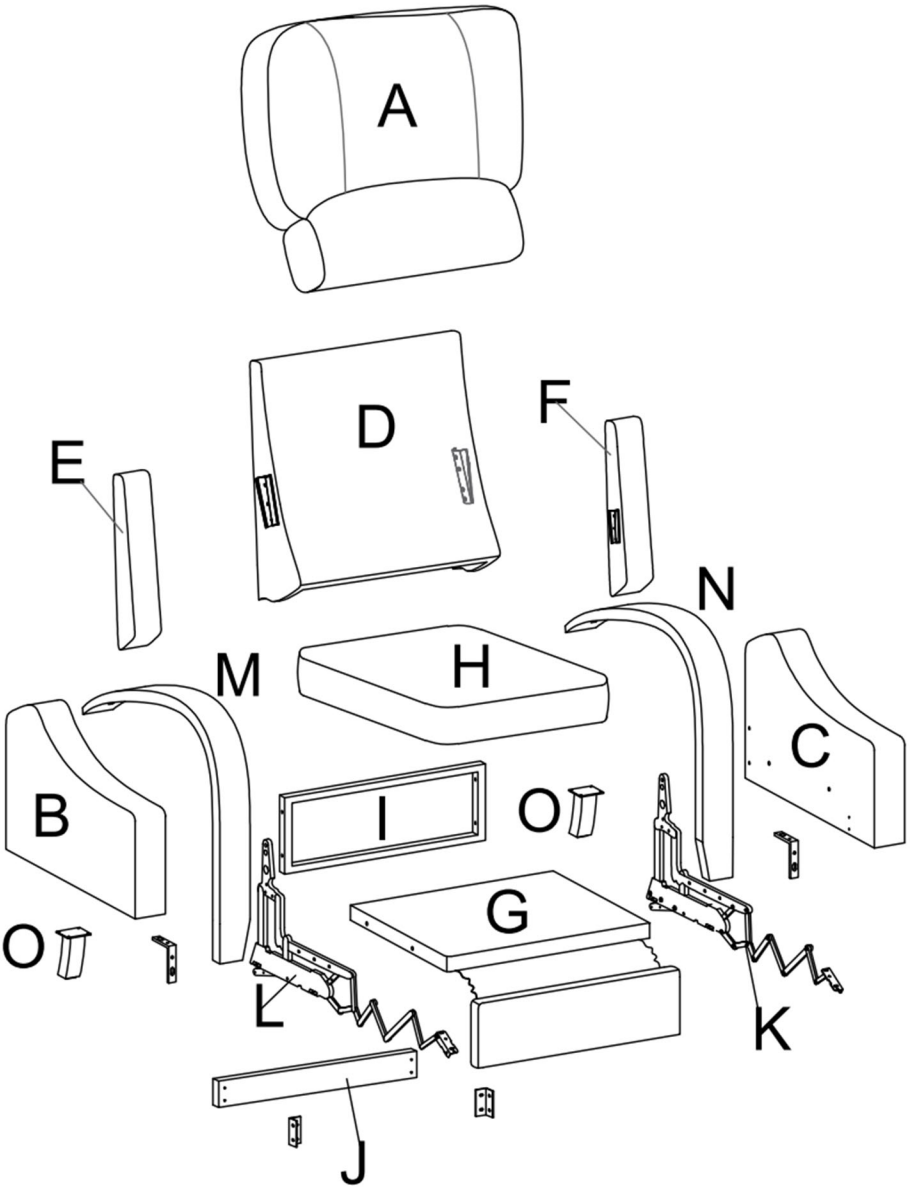

PARTS

A*1



Back cushion

B*1

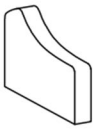

Right arm

C*1

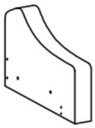

Left arm

D*1



Backrest

E*1



Right wing

F*1



Left wing

G*1

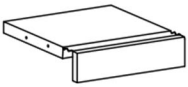

Seat frame

H*1



Seat cushion

I*1



Rear connect bar

J*1



Connecting bar

K*1



Sofa metal functional support-left

L*1



Sofa metal functional support-right

M*1



Right Bentwood Armrest

N*1



Left Bentwood Armrest

O*2



Rear legs

HARDWARE

TOOL LIST

①*28



M6*16mm Bolt

②*14



M6*45mm Bolt

③*1



Allen key

④*2



Flat washer

⑤*2

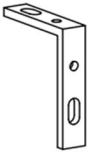

L-shaped angle iron

⑥*2



L-shaped angle iron

Please make sure all hardware&packing material fitting the list. Especially some small accessories may be missing during transportation. Please contact us if you have any question.

step 1

Cut the plastic air compression bags, and take out the cushion (A&H). Let it recover to its original shape, the whole recovery process might take 48 hours, you may gently slap on it to speed up the process.

Please exercise caution when opening the packaging to avoid injury or damage to the product.

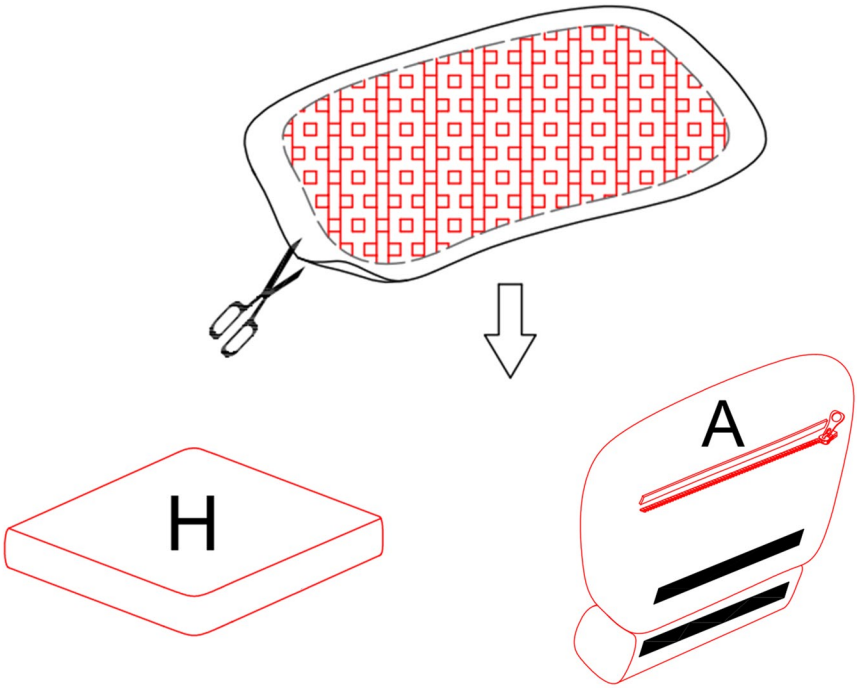

step 2

Then place the seat frame on its side on a clean surface as shown. Align the holes on the sofa metal functional supports (K) with the holes on seat frame, use the allen key (3) to tighten the bolts(2).

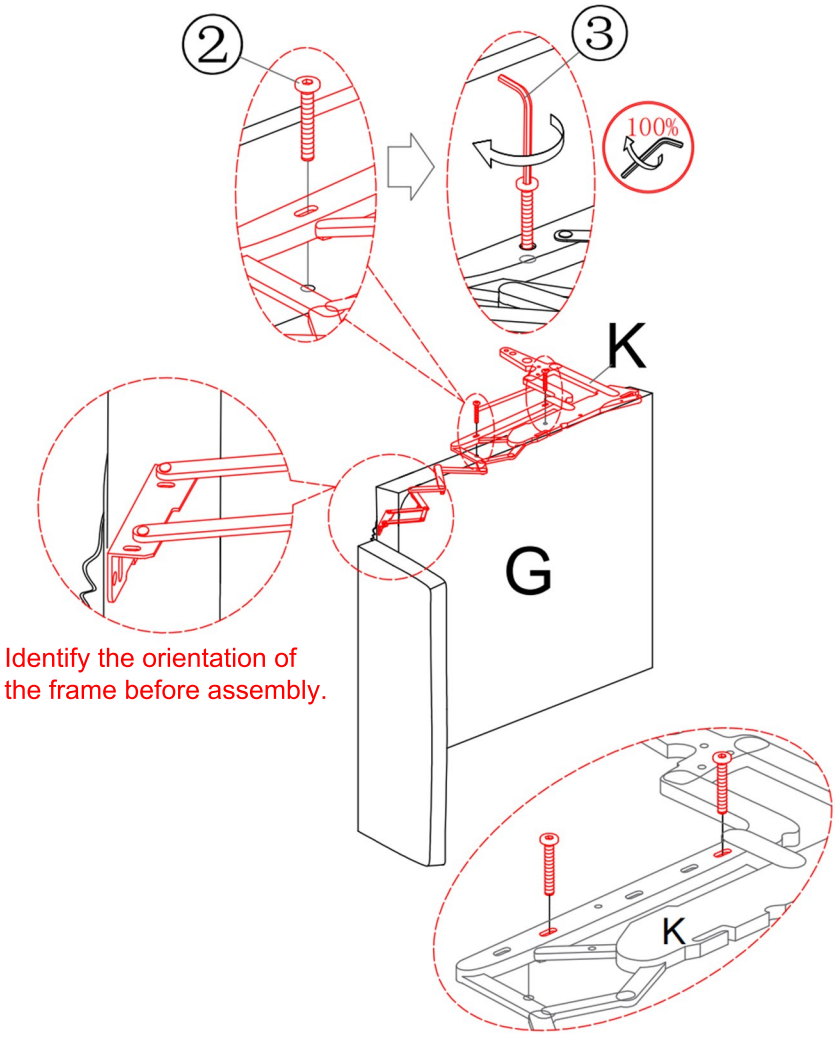

step 3

Then place the seat frame on its side on a clean surface as shown. Align the holes on the sofa metal functional supports (L) with the holes on seat frame, use the allen key (3) to tighten the bolts(2).

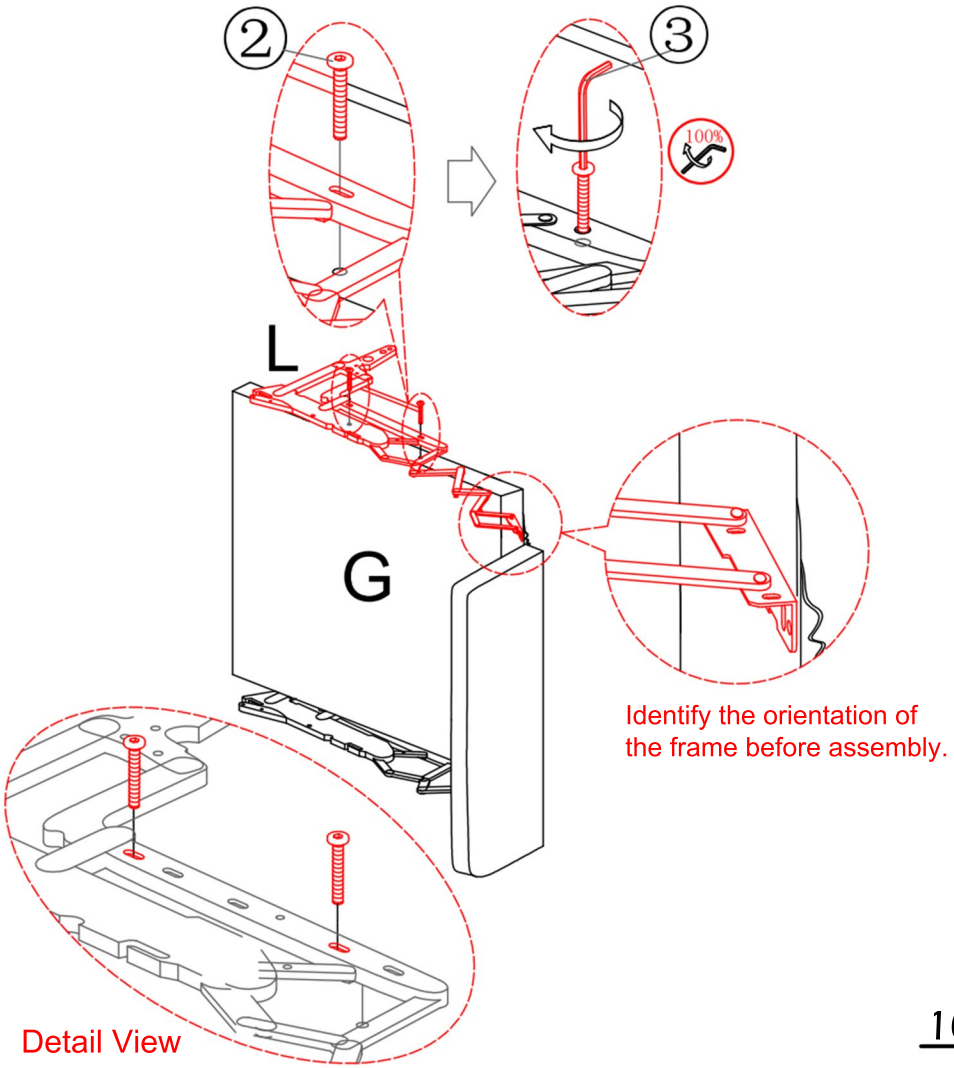

step 4

The board that connect to the seat frame is the footrest, then align the bolt holes on the footrest with the bolt holes on the extended part on the sofa metal functional supports, use the allen key (3) provided to tighten the bolts(1).

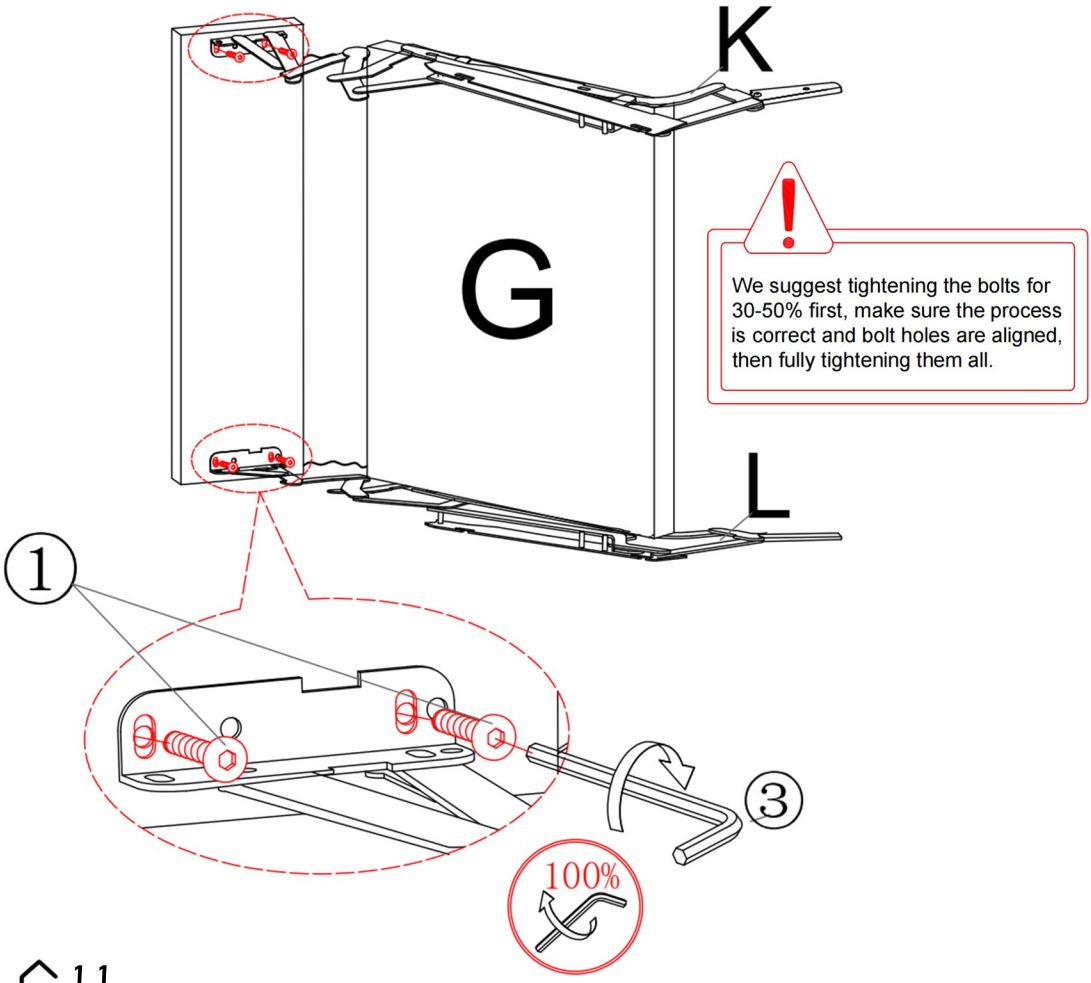

step 5

As shown in the figure, align the metal connector on the curved armrests (M&N) with the metal connector on the armrests (B&C) and insert them.

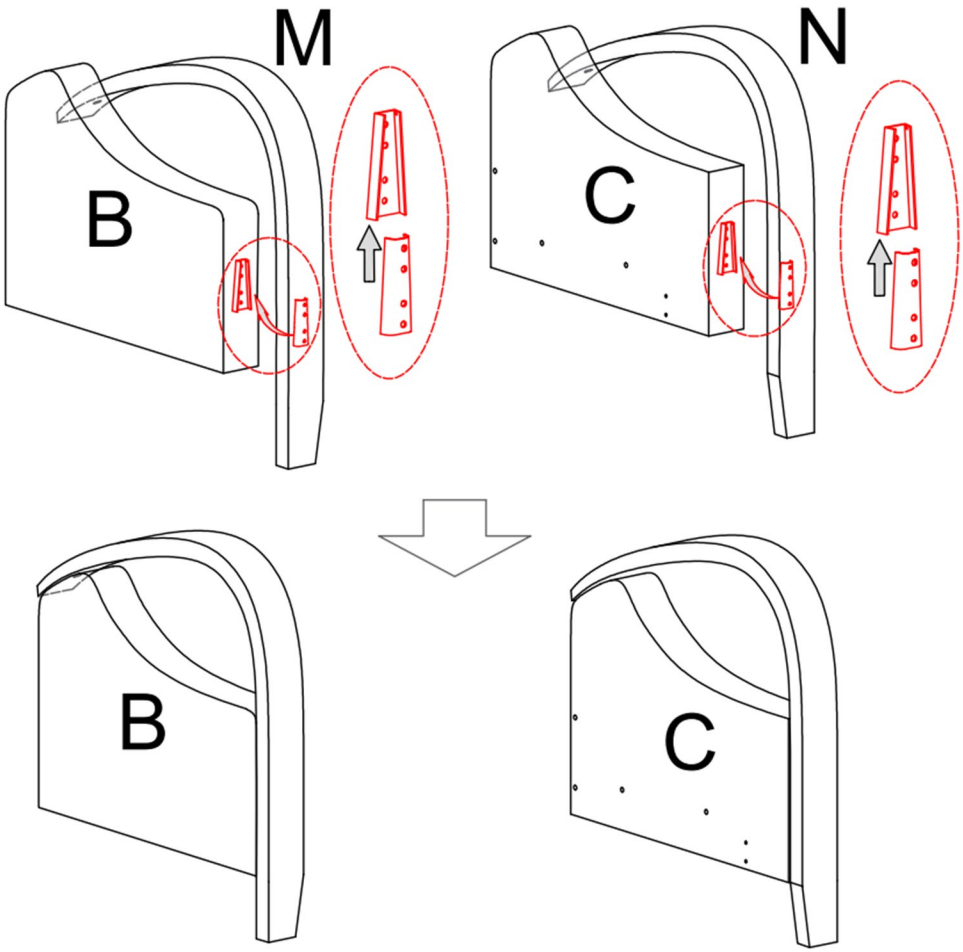

step 6

Align the screw with the hole on the back of the armrest as shown, then tighten it with a wrench.

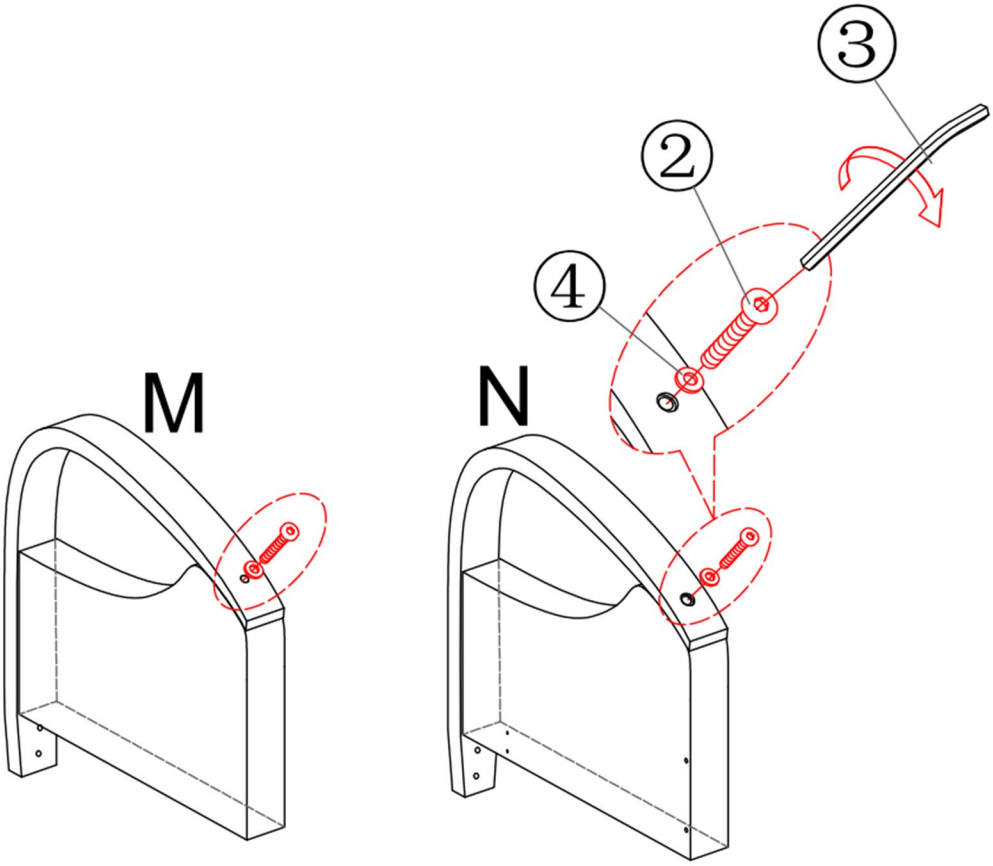

step 7

Place the angle iron (5) in the corresponding position shown in the figure, insert the screws, and then use a wrench to tighten them one by one.
Align the rear foot (O) with the holes as shown, insert the screw, and then use a wrench to tighten it in sequence.

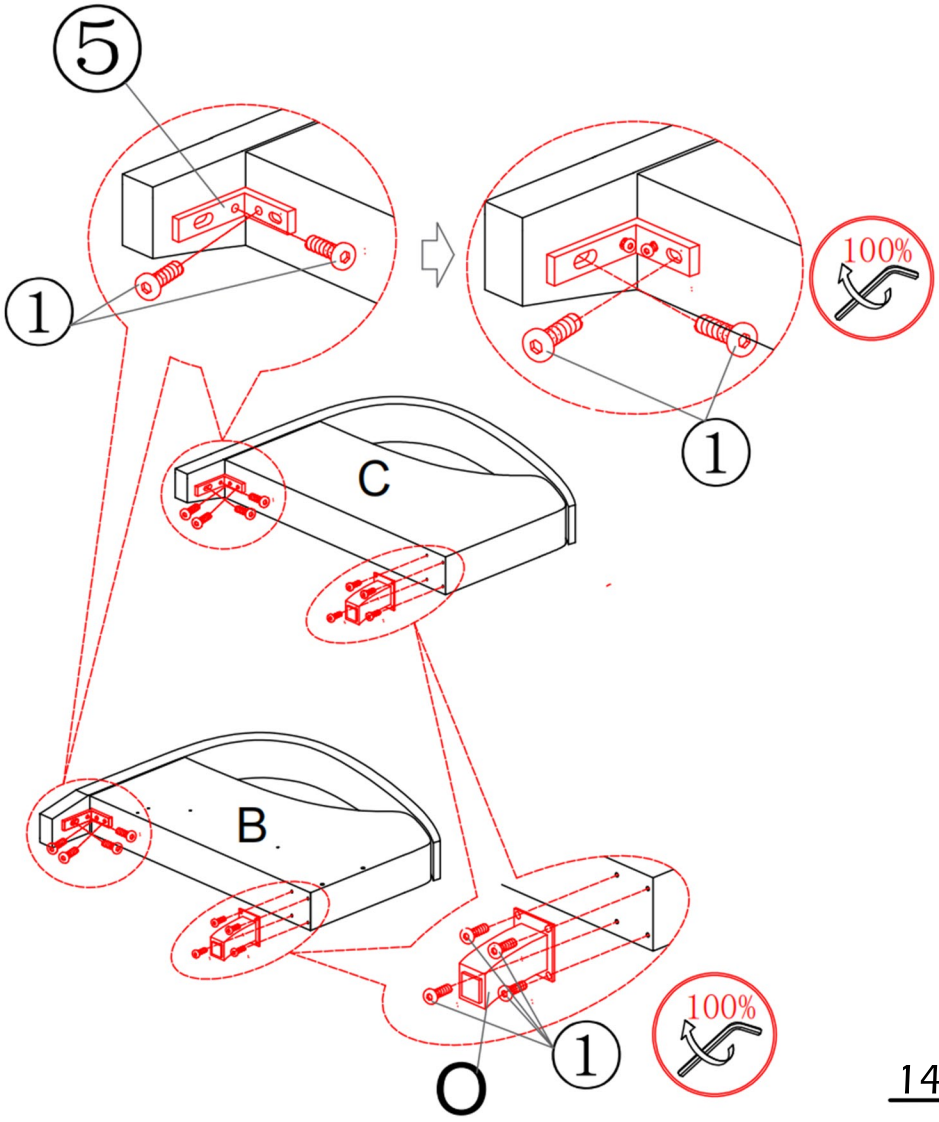

step 8

Use the allen key (3) provided to tighten all four bolts(2),
DO NOT tighten the bolts completely.

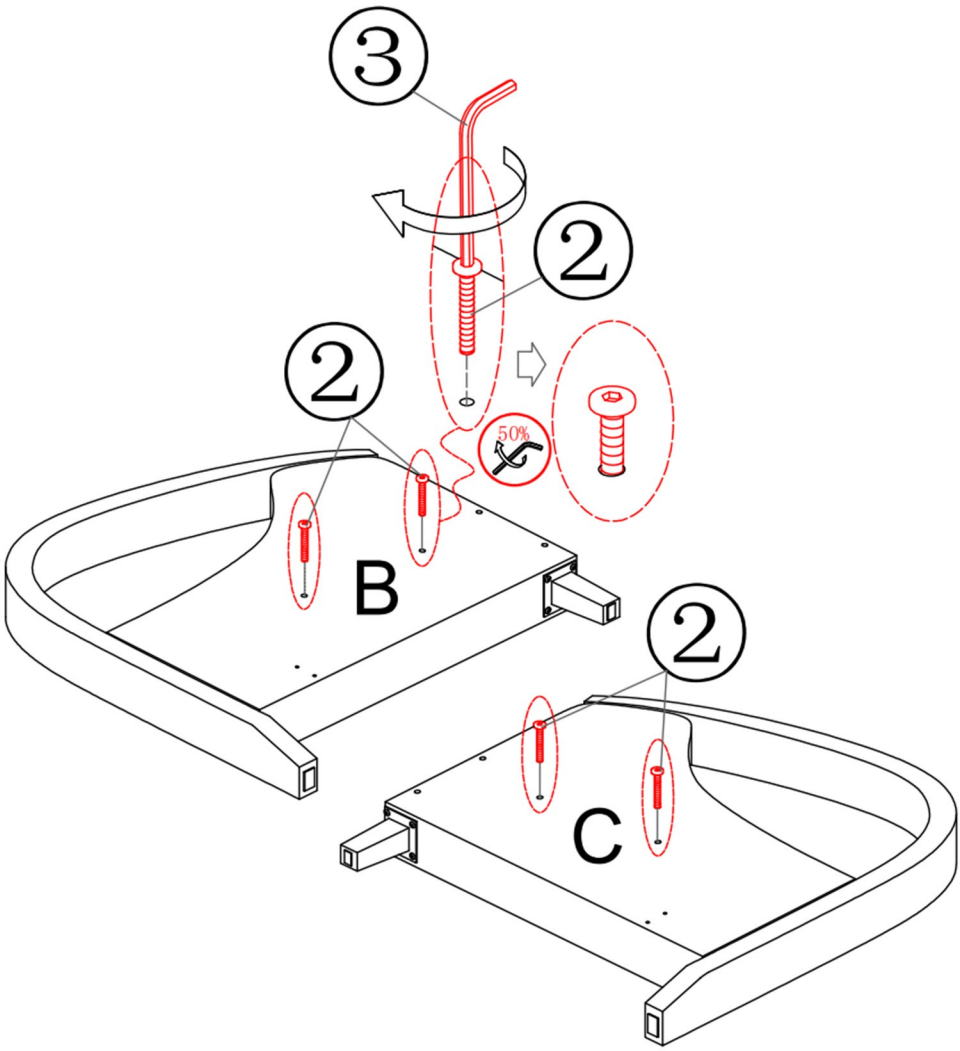

step 9

Use the 1/3 remained screws from last step (labled step 8) to hang the armrests (C) into the hold with a notch on iron frame as shown, make sure both of the bolts are correctly aligned.

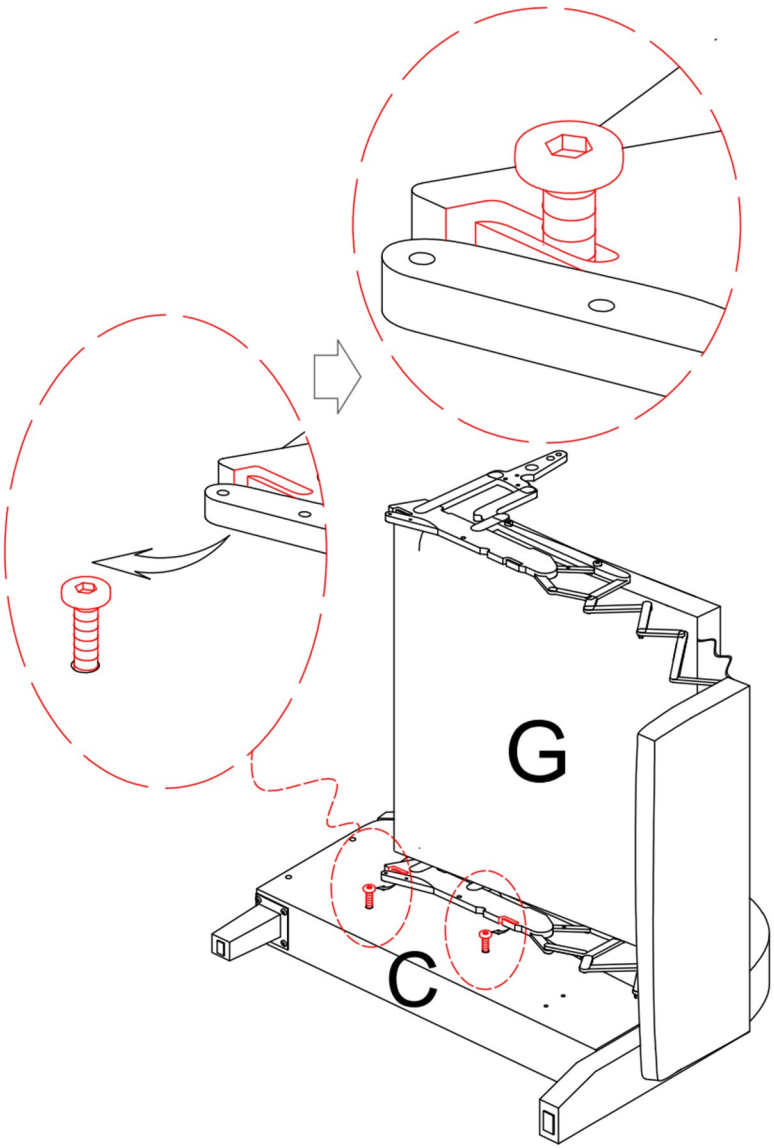

step 10

Use the allen key (3) provided to tighten both bolts, make sure both bolts are fully tightened before next step.

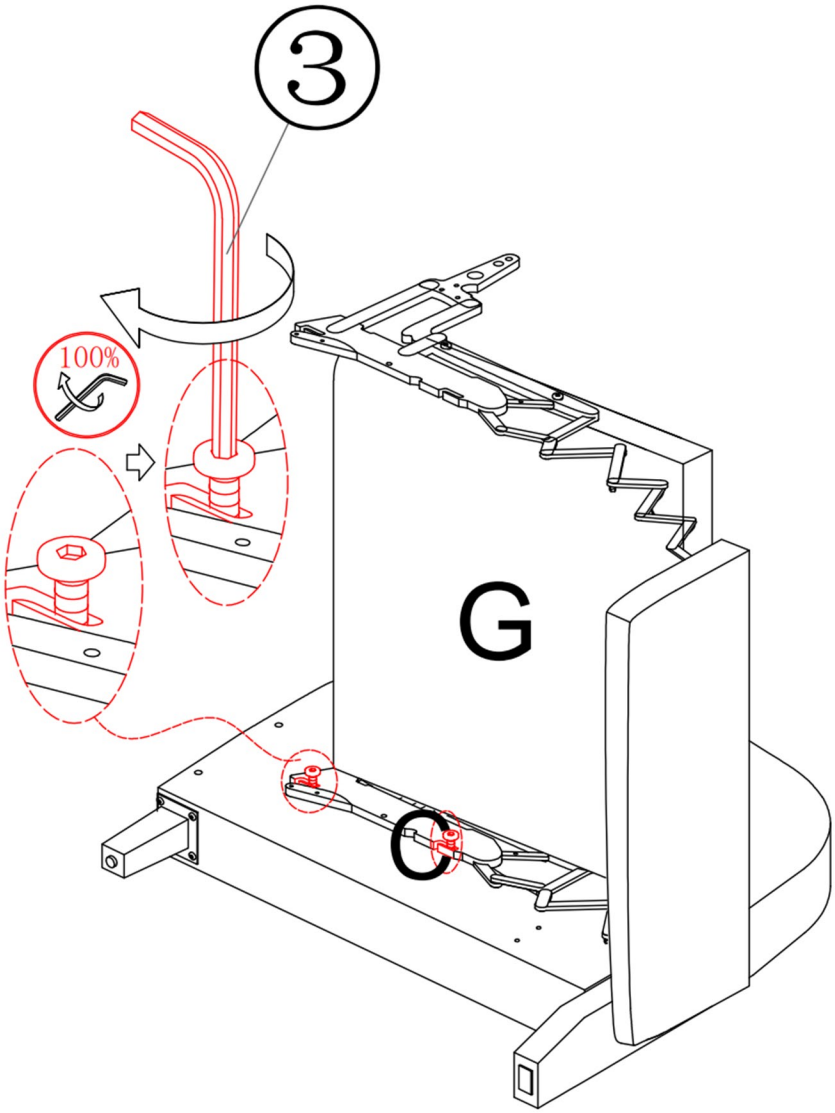

step 11

Repeat the same installation method as in Step 9.
Then use the allen key (3) provided to tighten both bolts, make sure both bolts are fully tightened before next step.

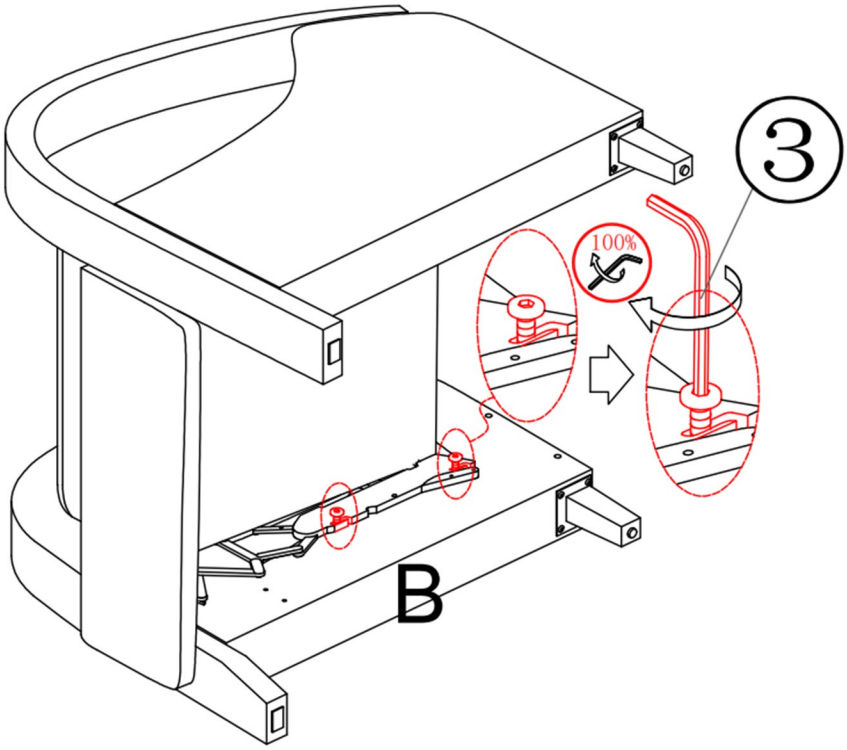

step 12

As shown in the diagram, first attach the L-shaped Irons (6) to the Connect Bar (J).

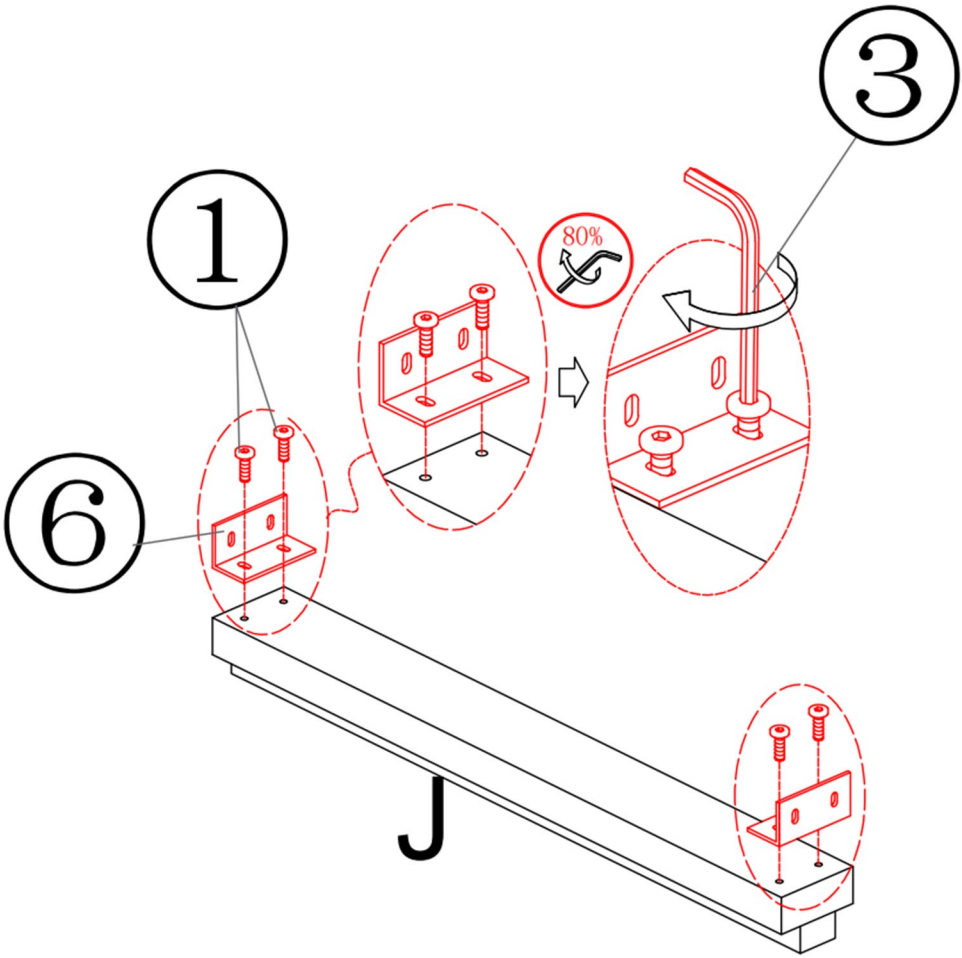

step 13

Wing the front footrest outward first before this step.
Place the Connect Bar (J) between the Armrests (B&C).
Please make sure the direction of the Connect bar(J) before install.
Use the Bolt (1) with the L-bracket to secure Connect Bar (J) to the column (as shown at the top and bottom connection points).
Tighten the bolts using the Allen key (3).

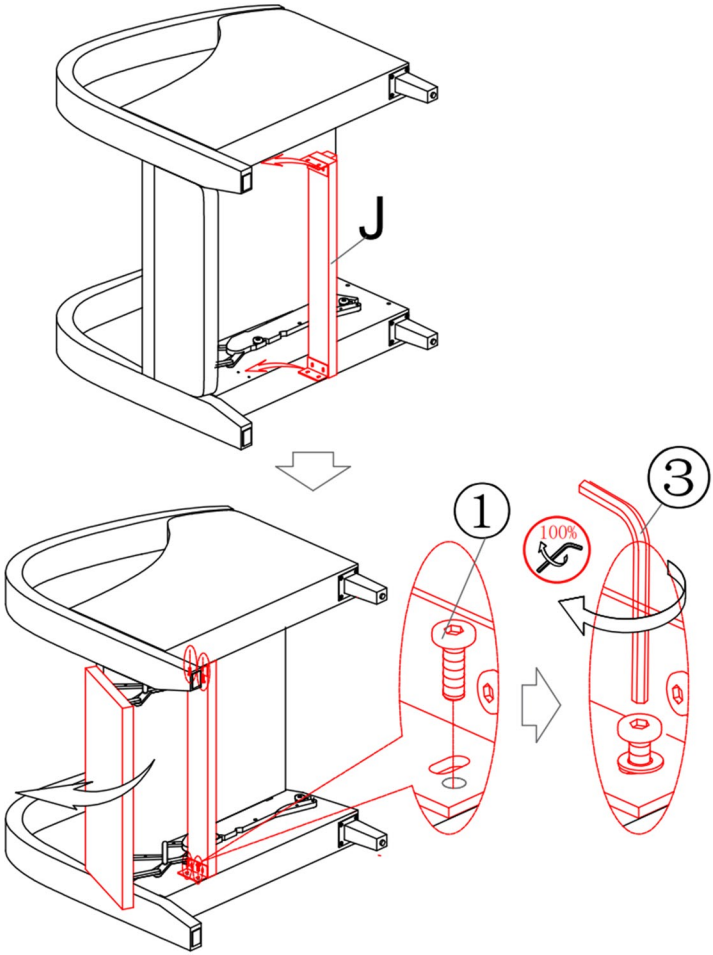

step 14

Retract the front footrest first before this step.
Then, install the Connect Bar (I) between the Armrests (B&C).
Please make sure the direction of the Velcro tape on the rear cross bar is correct before install.
Then, install the Connect Bar (I) between the Armrests (B&C).
Use the allen key (3) provided to tighten all four bolts(2).

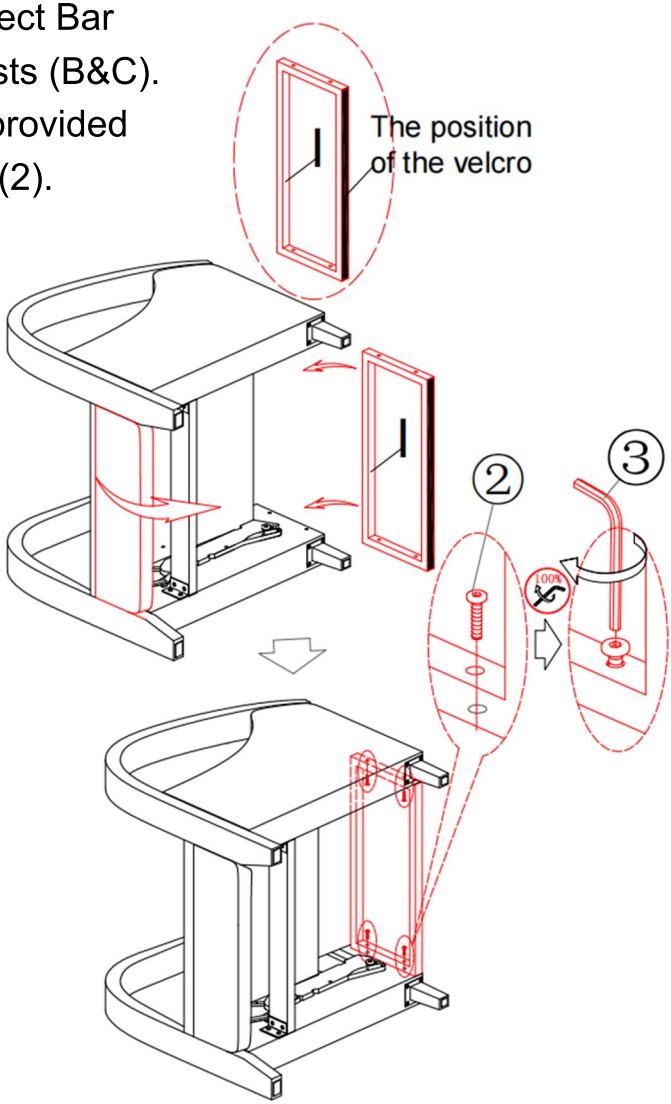

step 15

As shown in the diagram, insert the Backrest (D) into the armrests. Make sure to align the metal connectors correctly with the slots.

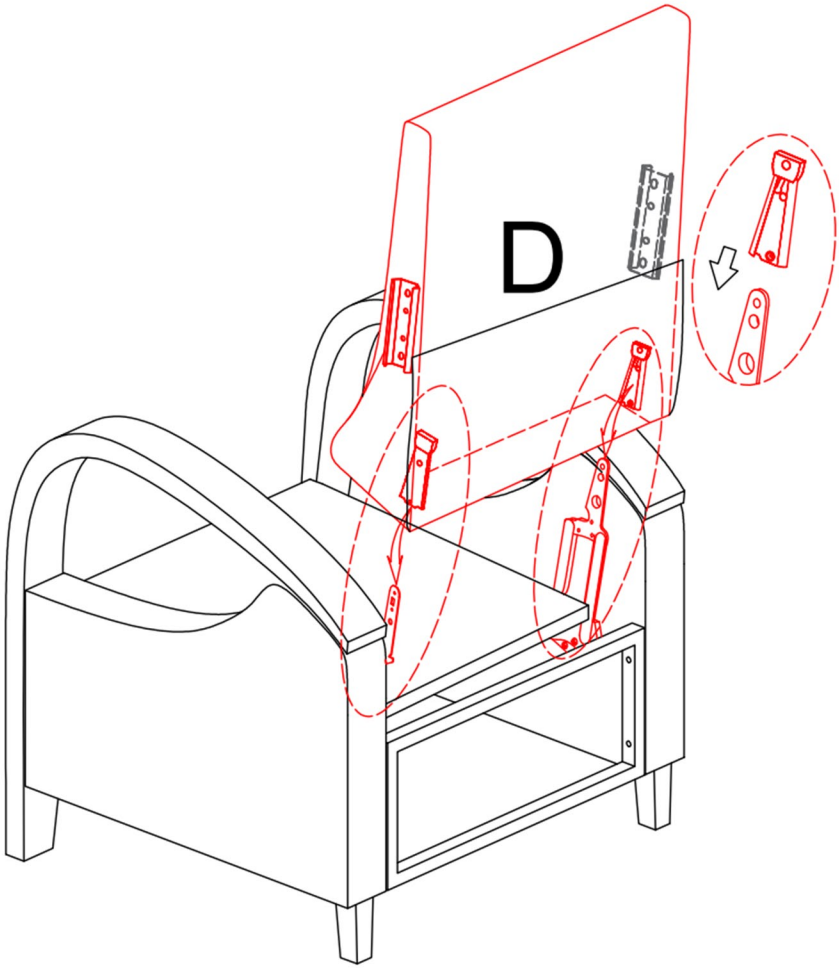

step 16

Secure the velcro flap at the bottom of rear connect bar as illustrated.

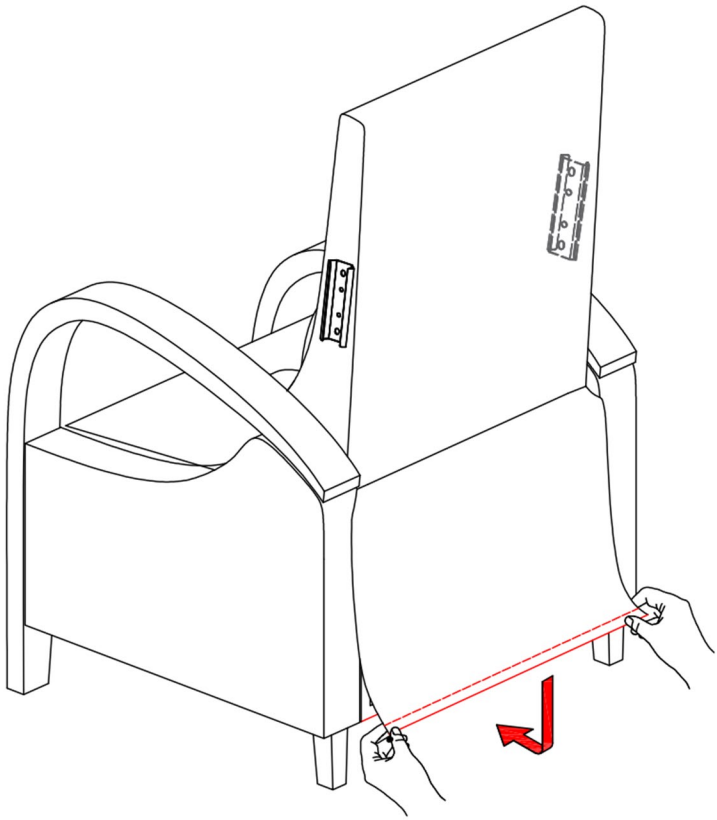

step 17

Install the wings (F&E) to the backrest as shown. Make sure the connector are aligned to the correct slot before pushing down.
Repeat this step for both side ears.

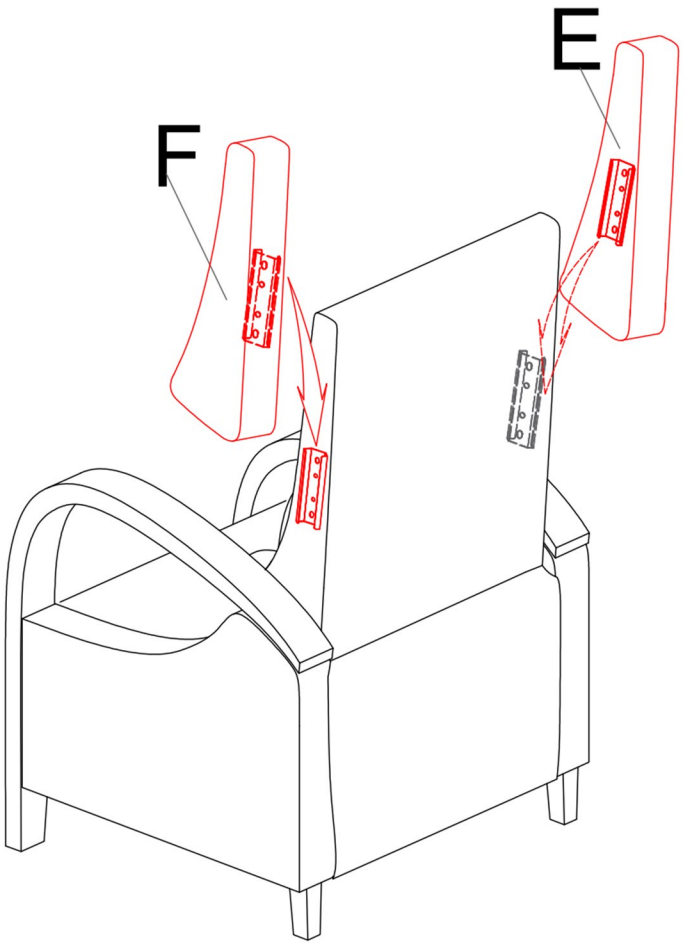

step 18

Place the seat cushion (H) on it.

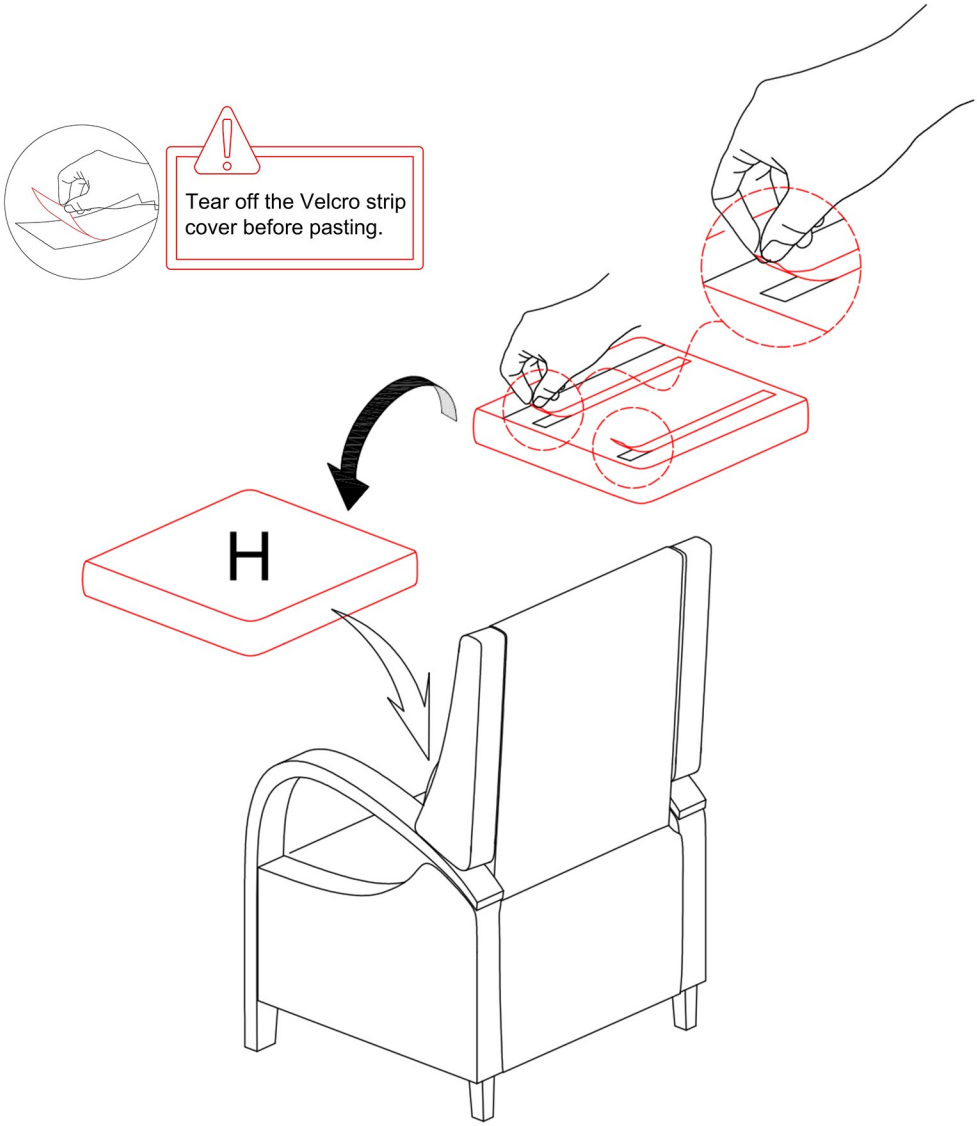

step 19

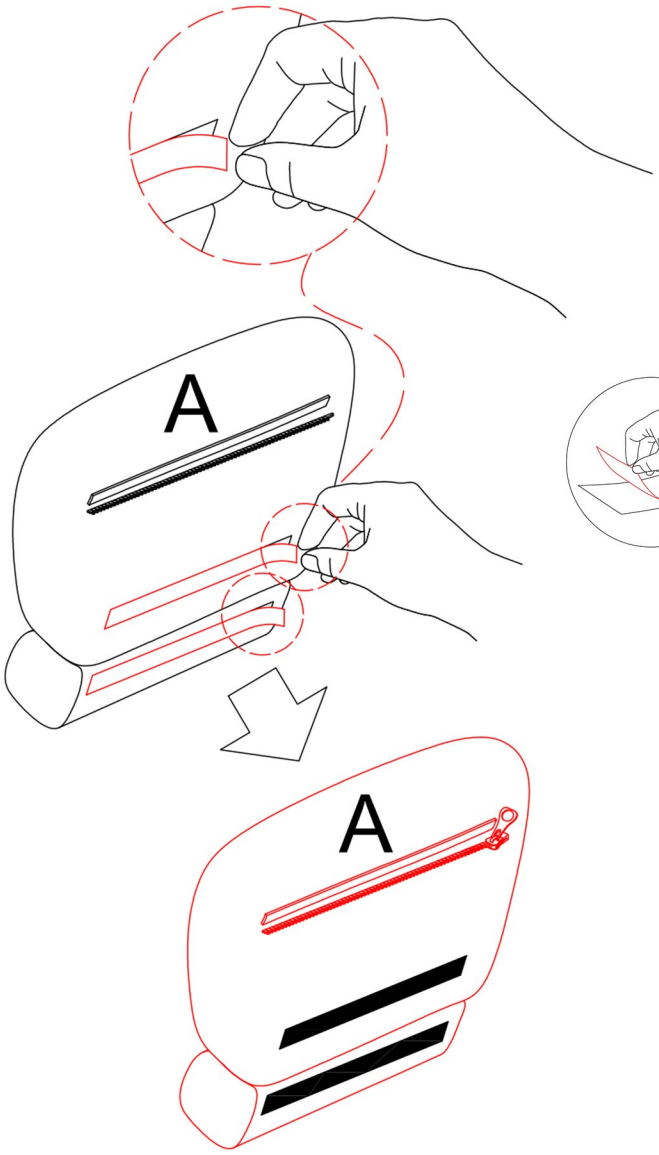

Tear off the Velcro strip cover before pasting.

step 20

As shown in the picture, zip up the zipper and connect the back cushion(A) cover to the backrest.
Then, use your hands to pat the backrest to make it fit properly.

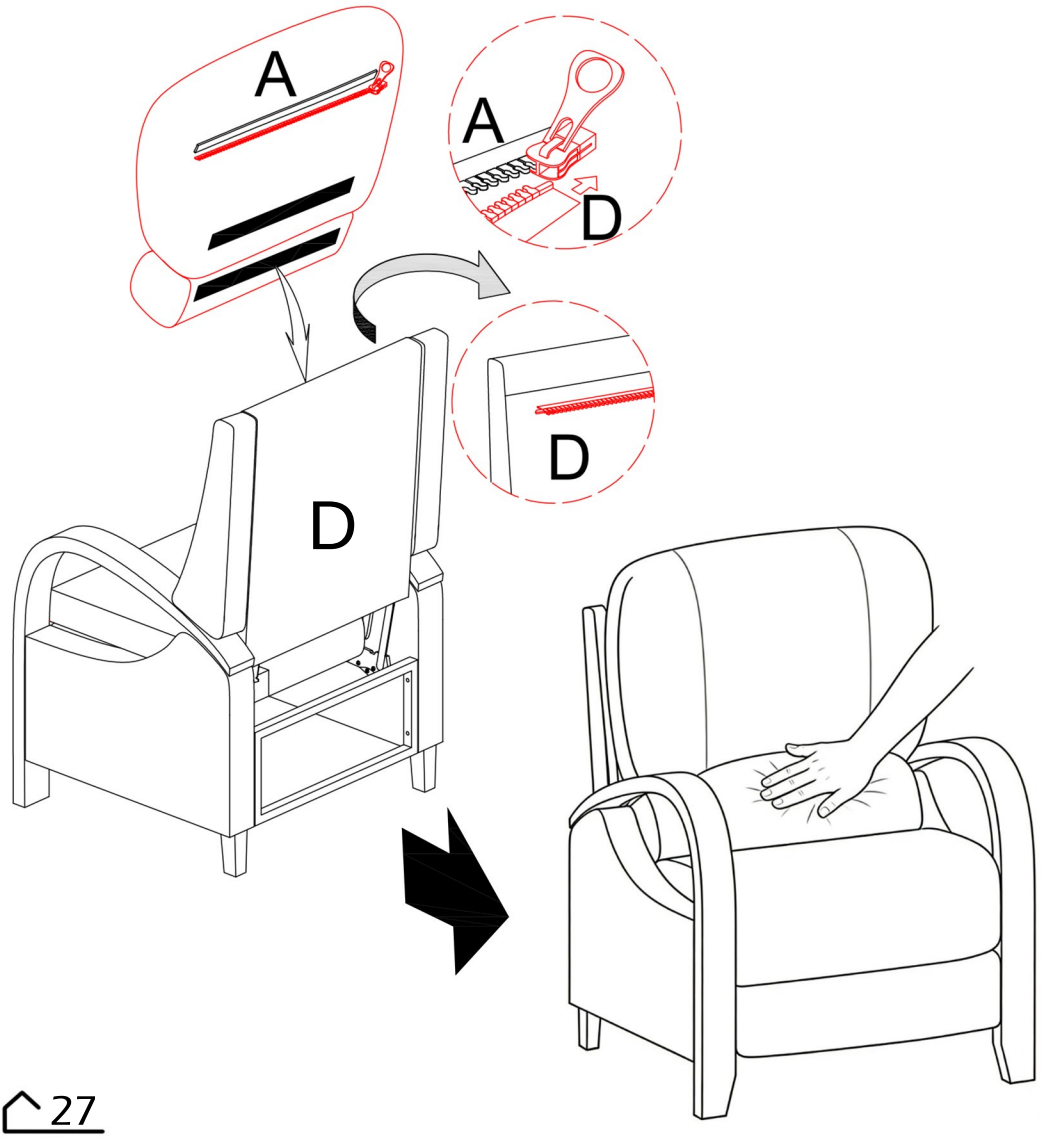

step 21

Congratulations! You have finished the assembly, thank you again for choosing our product! Please enjoy!

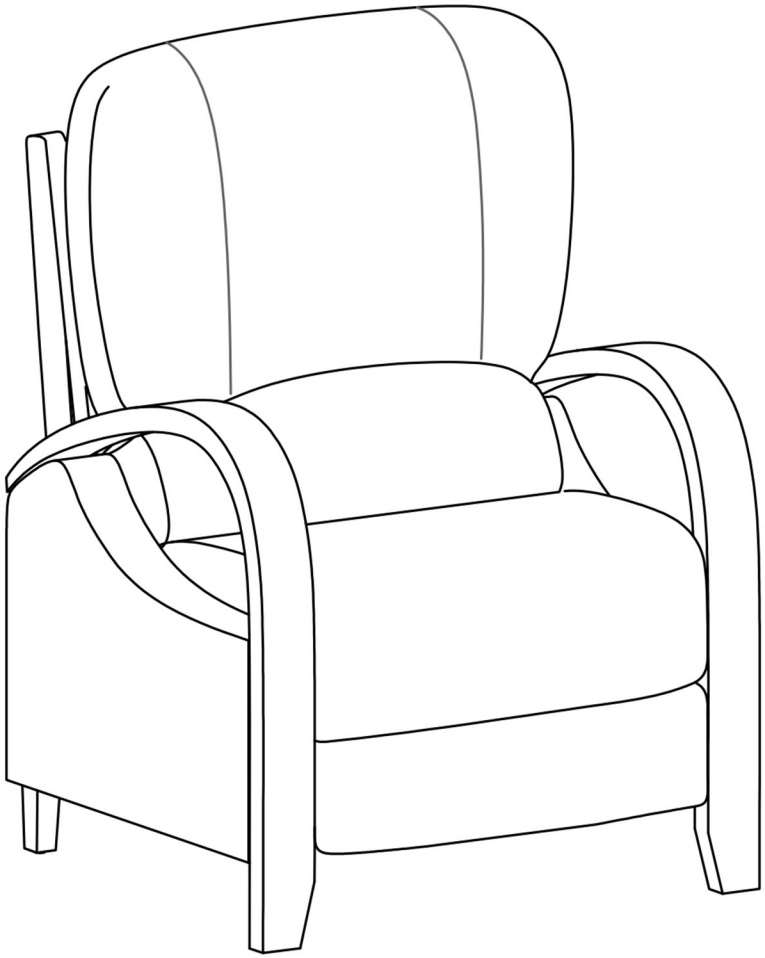

step 22

The backrest and the footrest are adjustable, the backrest has recline function. When you lie down and apply force to the backrest, the footrest will lift up while backrest is reclining down.

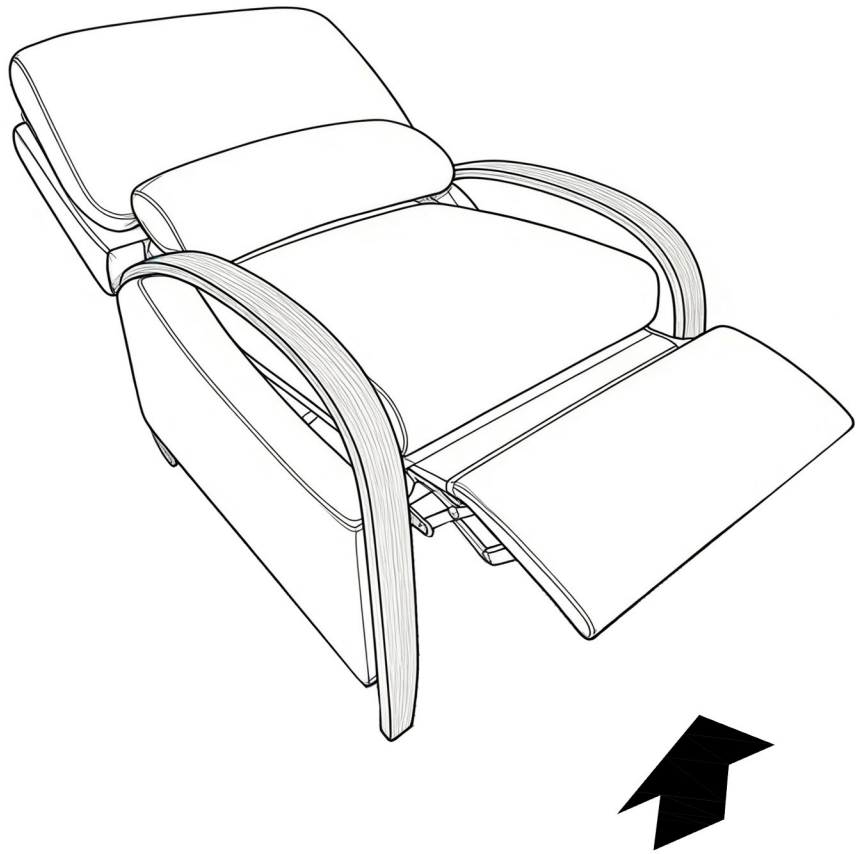



ASSEMBLY INSTRUCTIONS

Tel.+1-562-510-9089

E-mail:support@dreamsidea.com

https://www.dreamsidea.com