Battery Powered Picture Light

INSTALLATION SHEET

NOTE:

- It's recommended to use the 5V/2A charger to avoid long charging time.
- Please check if the red indicator light is on when charging.
- Package list: Picture Light*1, Mounting Bracket*1, Screw Kit*2, Type-C USB Cable*1, 3M Tape*1, Remote*1
- Prepare everything in a clear area.
- Read instructions carefully before you start assembly.
- Keep this installation sheet for future reference.

1. Remove fixture from its original package.
2. Please check whether the product can work normally with the remote before you start assembly.
3. Secure the mounting bracket with the screws (or the 3M Tape) provided in the package.
4. Fix the light on the bracket.
5. Please charge the picture light with a 5V charger for 4 hours before use.

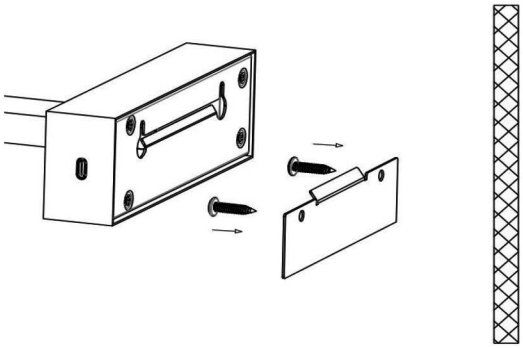

A. Installation with screws mounting

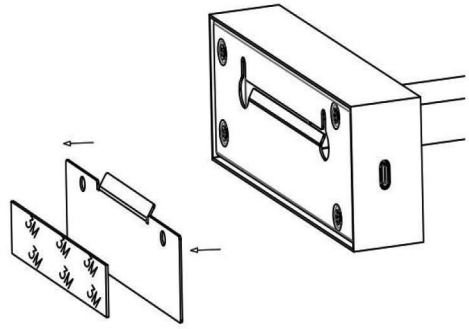

B. Or installation with 3M sticking

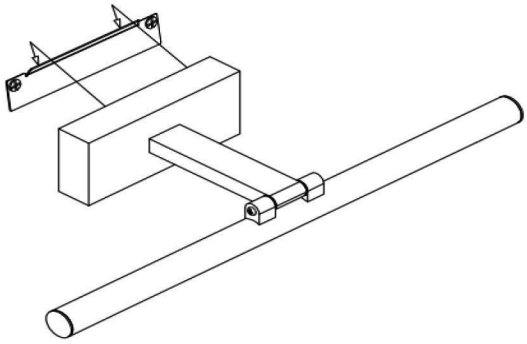

C

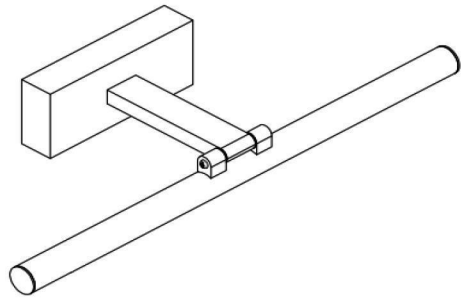

D

Attention please: Before using the remote control , please remove the insulation film from the back to ensure proper functionality. If the remote does not work, please consider replacing the batteries and try again.

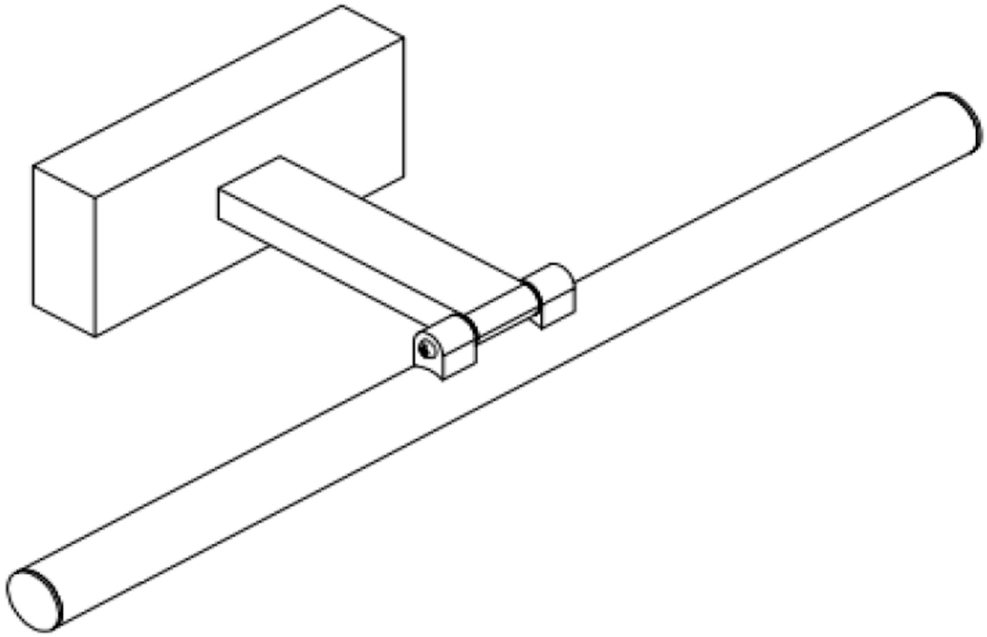

Warning:
This device complies with Part 15 of the FCC Rules. Operation is subject to the following two conditions: (1) this device may not cause harmful interference, and (2) this device must accept any interference received, including interference that may cause undesired operation.
Changes or modifications not expressly approved by the party responsible for compliance could void the user's authority to operate the equipment.
NOTE: This equipment has been tested and found to comply with the limits for a Class B digital device, pursuant to Part 15 of the FCC Rules. These limits are designed to provide reasonable protection against harmful interference in a residential installation. This equipment generates, uses and can radiate radio frequency energy and, if not installed and used in accordance with the instructions, may cause harmful interference to radio communications. However. there is no guarantee that interference will not occur in a particular installation.

If this equipment does cause harmful interference to radio or television reception which can be determined by turning the equipment off and on, the user is encouraged to try to correct the interference by one or more of the following measures:
--Reorient or relocate the receiving antenna.
-- Increase the separation between the equipment and receiver
--Connect the equipment into an outlet on a circuit different from that to which the receiver is connected.
--Consult the dealer or an experienced radio/TV technician for help
NOTE:
This device and its antenna(s) must not be co-located or operation in conjunction with any other antenna or transmitter