FLOOR CABINET

Assembly Instructions – Please keep for future reference

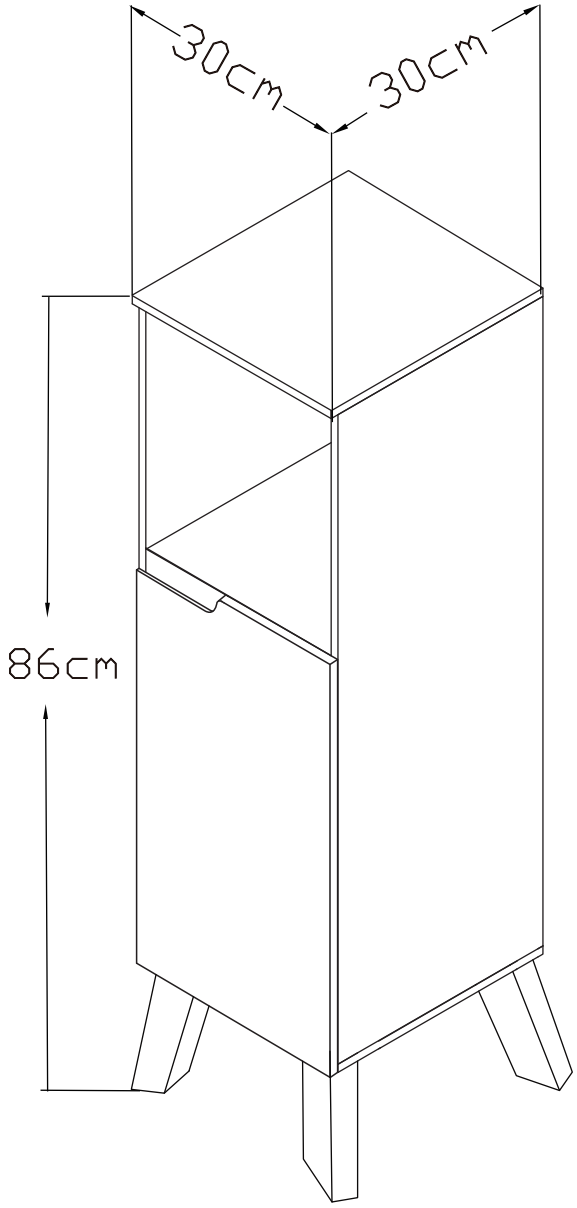

Dimensions	No. people	Assembly Time	OW #
Width: 30 cm Depth: 30 cm Height: 86cm		20 mins (approx.)	

Important – Please read these instructions fully before starting assembly

Safety and Care Advice

Important – Please read these instructions fully before starting assembly

- Check you have all the components and tools listed on pages 4 and 5.
- Remove all fittings from the plastic bags and separate them into their groups.
- Keep children and animals away from the work area, small parts could choke if swallowed.
- Make sure you have enough space to lay out the parts before starting.
- Do not stand or put weight on the product, this could cause damage.
- Assemble the item as close to its final position (in the same room) as possible.
- Assemble on a soft, level surface to avoid damaging the unit or your floor.
- We do not recommend the use of power drill/drivers for inserting screws, as this could damage the unit. Only use hand screwdrivers.



- Dispose of all packaging carefully and responsibly.

Glass Warnings

1. Do not place very hot or very cold items against or in close proximity to glass surfaces unless an adequately thick insulating material is used to prevent such items from coming into contact with the glass.
2. Do not strike the glass with hard or pointed items.
3. When cleaning glass panels or mirrors use a damp cloth or leather with washing up liquid or soft soap if necessary: do not use washing powders or any other substance containing abrasives since these substances can scratch glass.
4. It is essential that this unit is fixed to a wall with the ifxings provided (if applicable).
5. This product complies with BS7449: 1991
   Imported by Global Procurement and Marketing Ltd
   Model no. FH-BR211006 Batch no. GP0594
   Dimensions: 30*30*86cm.
6. If a glass component is chipped or broken, replace with glass of the type described above. Consult the manufacturer, retailer or agent with regard to obtaining a manufacturing specification and shape for replacement glass quoting the model number and batch number or date of manufacture.

Care and Maintenance

- Only clean using a damp cloth and mild detergent, do not use bleach or abrasive cleaners.
- From time to time check that there are no loose screws on this unit.
- This product should not be discarded with household waste. Take to your local authority waste disposal centre.

Exploded View

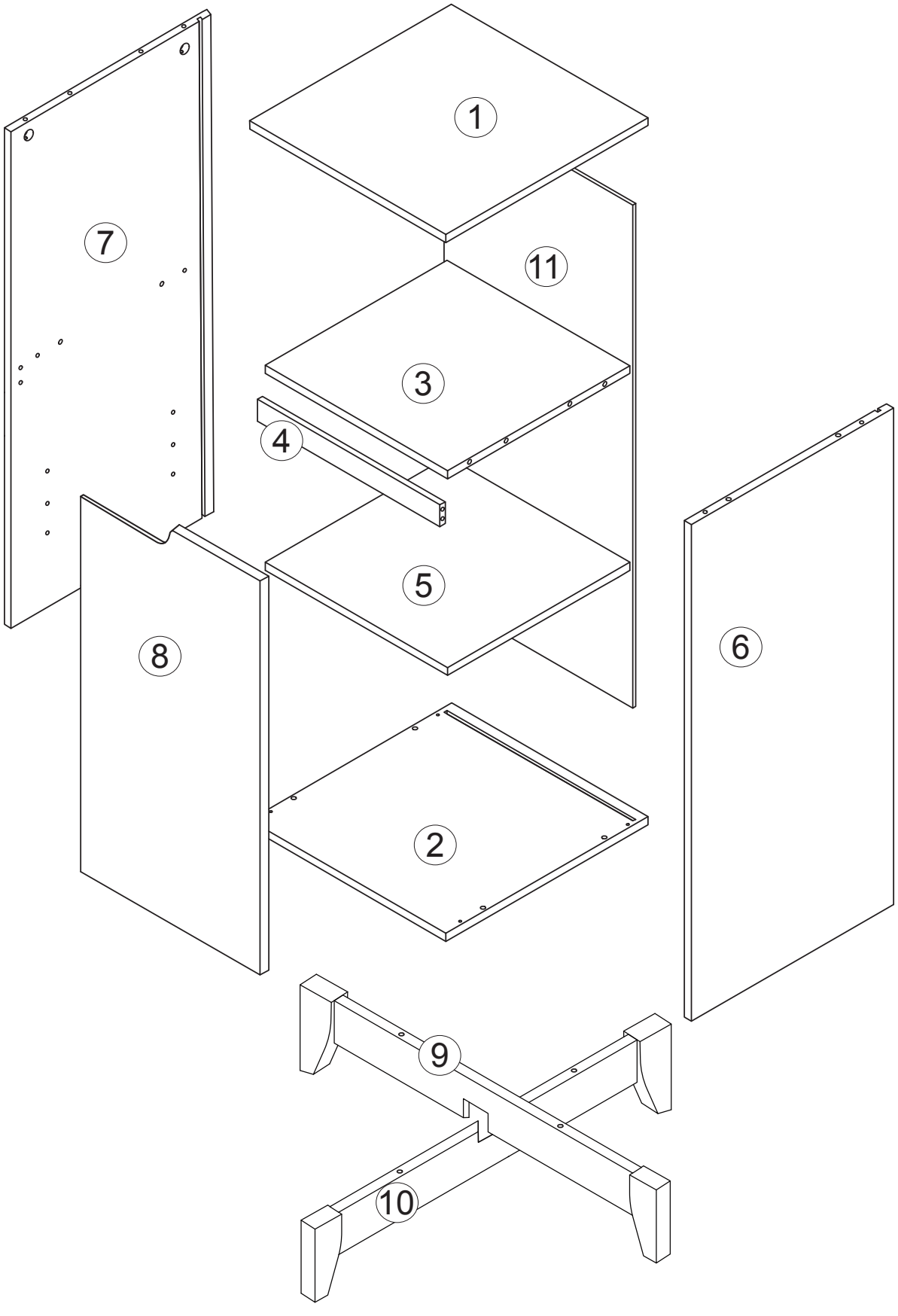

Components - Panels

Part No	Description	Qty	Size (mm)	Thickness (mm)
1	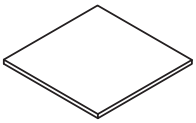	1PC	300×300	12
2	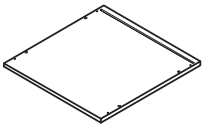	1PC	300×285	12
3	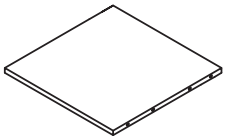	1PC	274×268	12
4	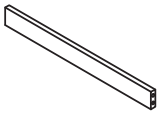	1PC	275×50	12
5	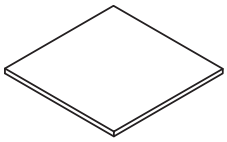	1PC	274×268	12
6	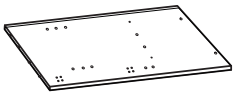	1PC	716×285	12
7	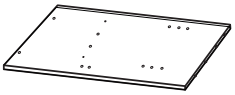	1PC	716×285	12
8	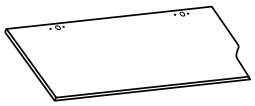	1PC	465×300	12
9	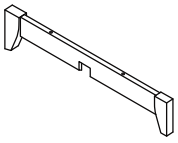	1PC	400×123	24
10	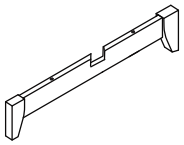	1PC	400×123	24
11	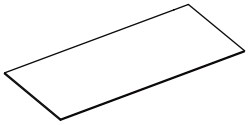	1PC	724×282	3

Components - Fixings

Please check that you have all the components listed below before constructing your item.

Note: The quantities below are the correct amount to complete the assembly. In some cases more fittings may be supplied than are required.

(A) **X 8**	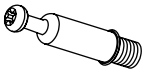	**(B)** **X 8**		**(C)** **X 16**	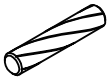 **M6 x 30mm**	**(D)** **X 5**	 **M4 x 35mm**
(E) **X 12**	 **M4 x 12mm**	**(F)** **X 4**	 **M6 x 45mm**	**(G)** **X 2**	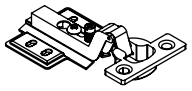	**(H)** **X 1**	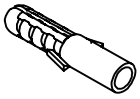
(I) **X 1**		**(J)** **X 2**		**(K)** **X 1**		**(L)** **X 4**	
(M) **X 4**	 **M3 x 14mm**	**(N)** **X 4**		**(O)** **X 4**			

Tools Required



Ruler – Use this to measure your screws (mm)

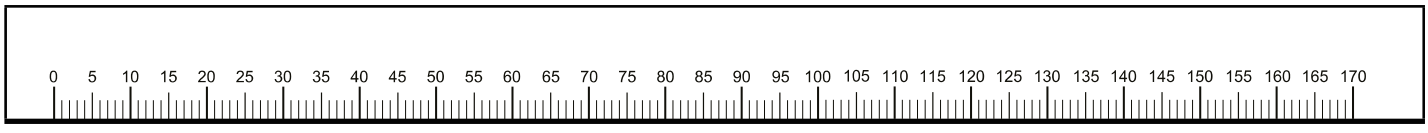

Important – Please read these instructions fully before starting assembly

Assembly Instructions

1

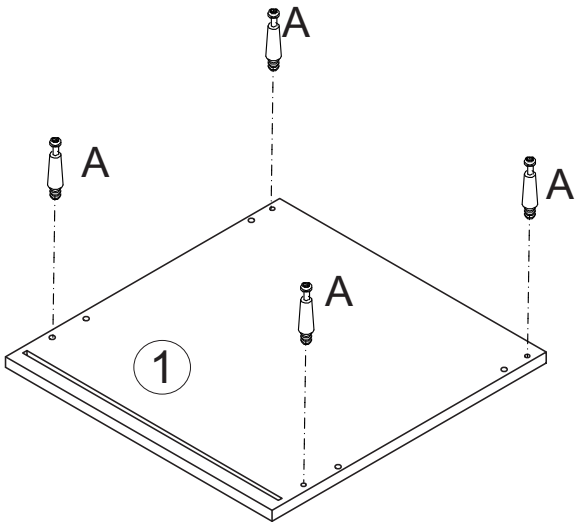

2

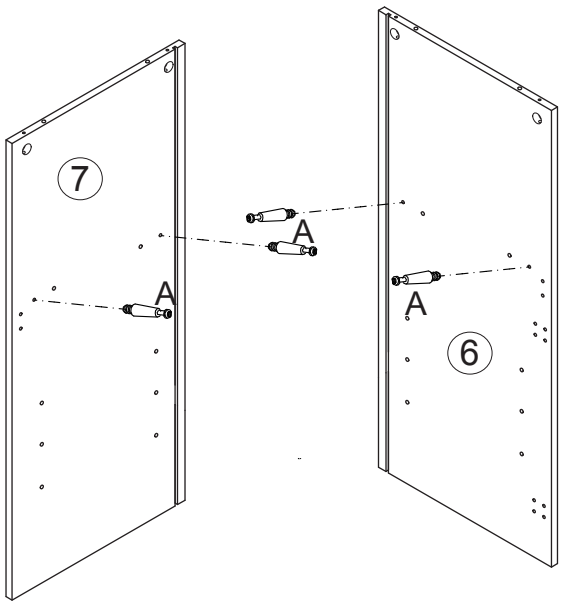

3

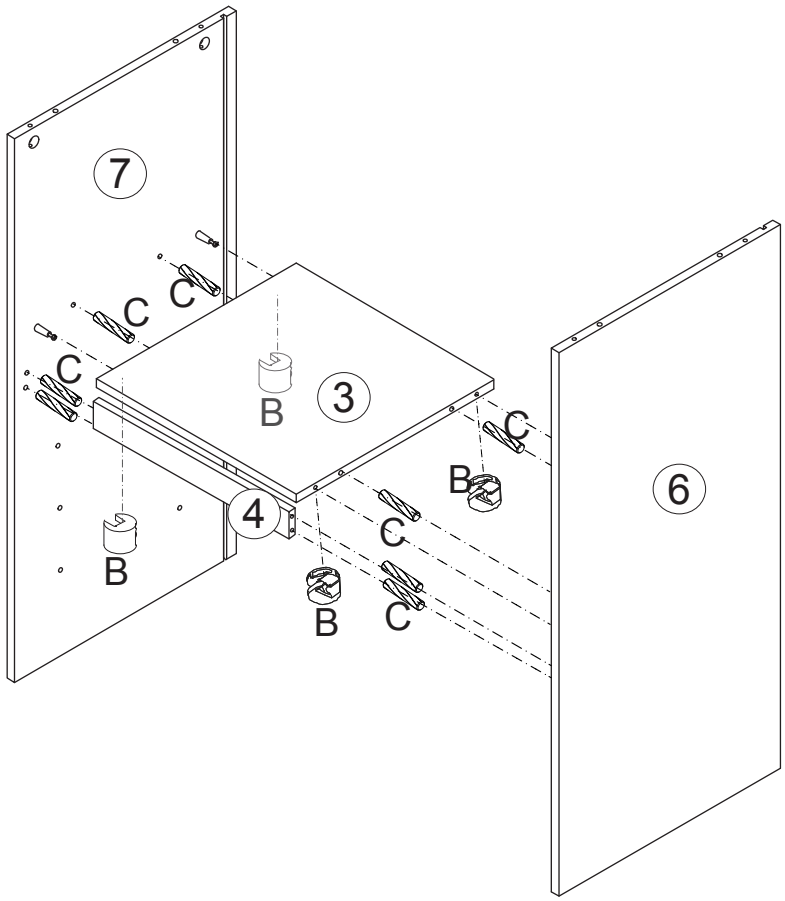

3

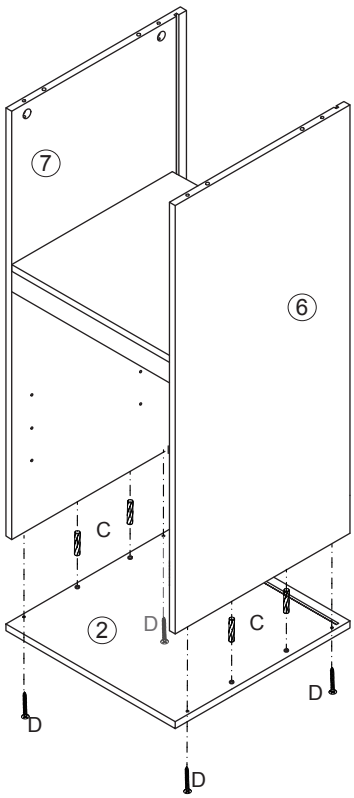

4

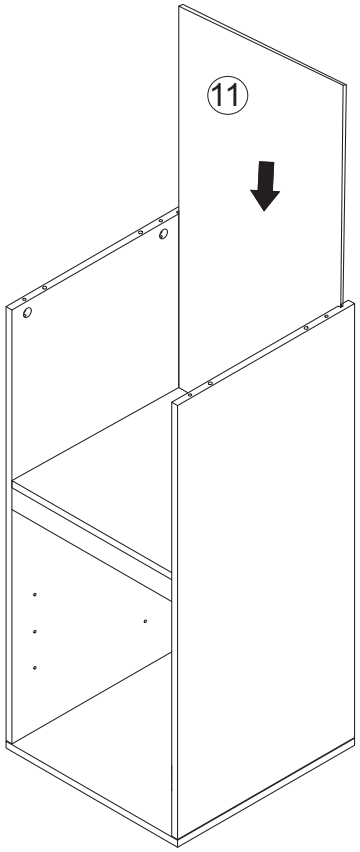

5

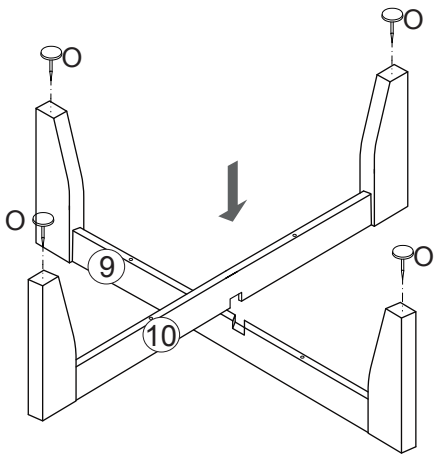

6

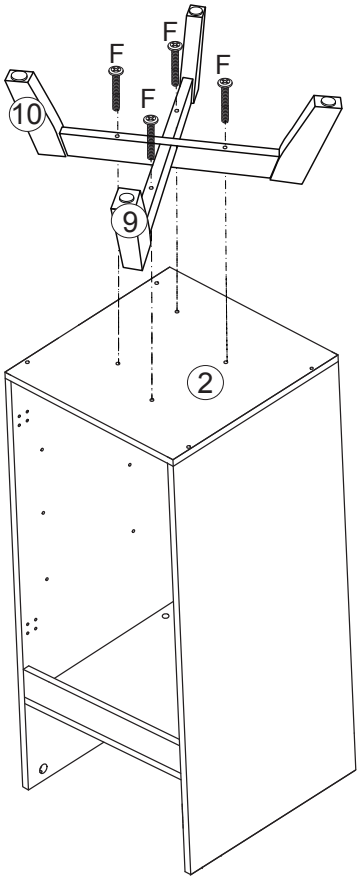

7

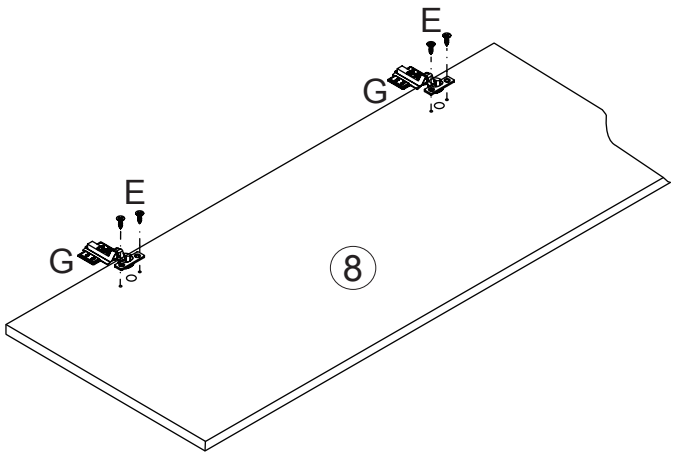

8

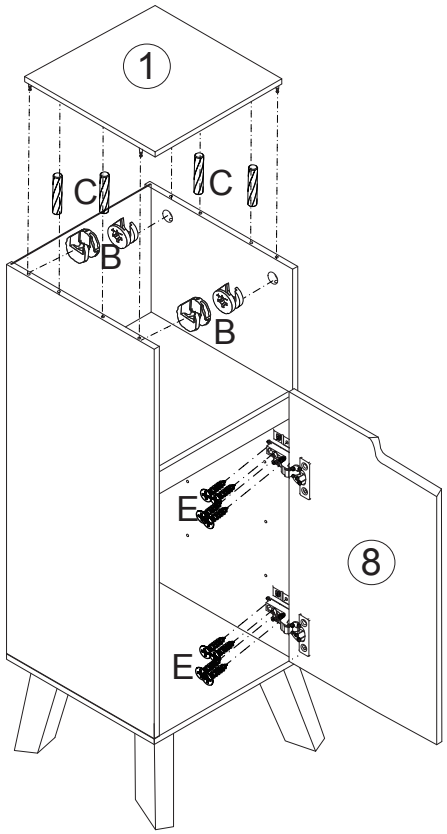

9

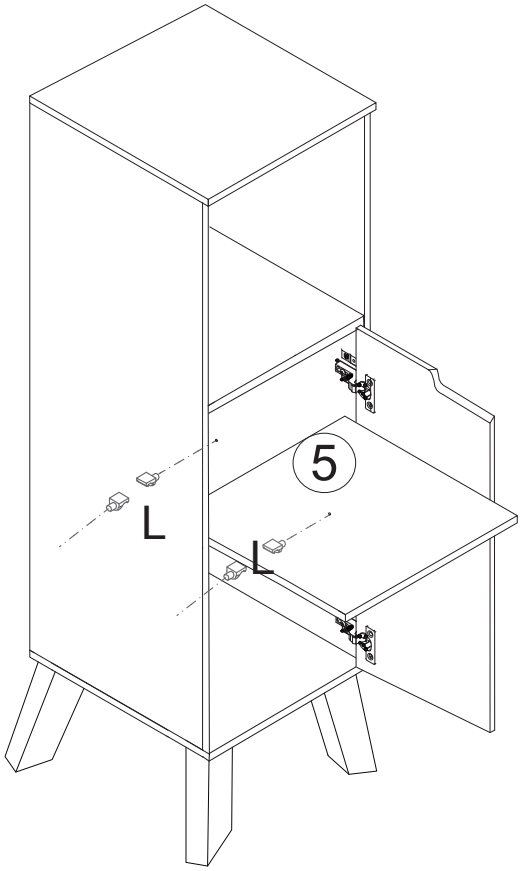

10

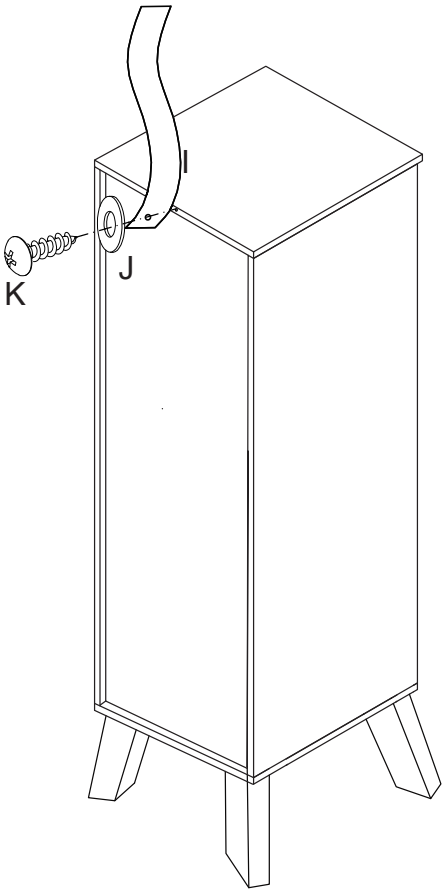

11

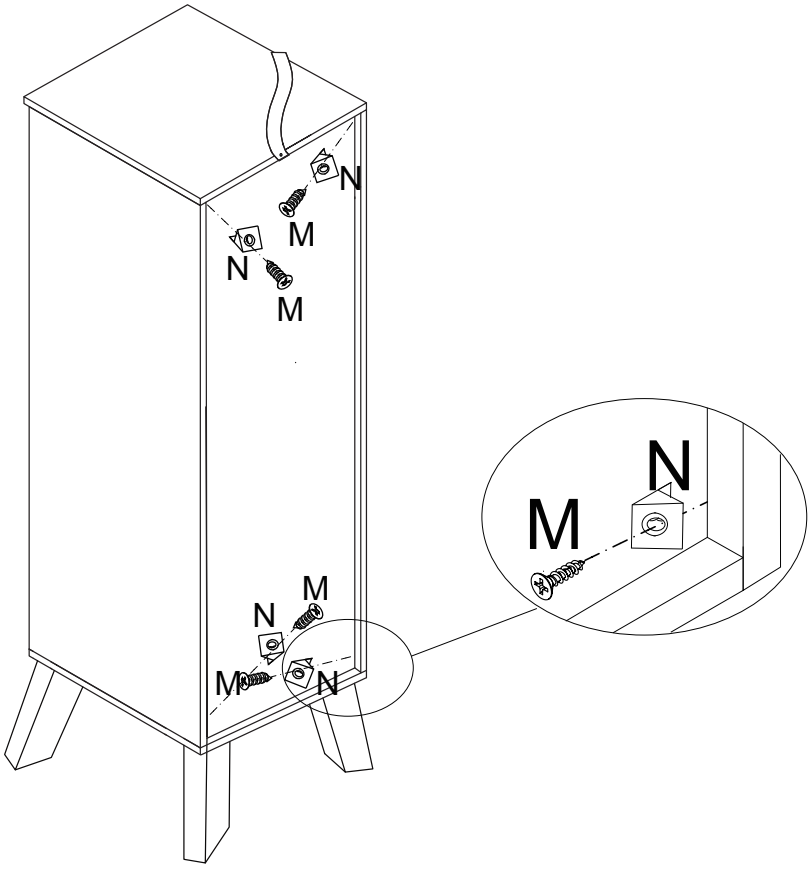

12

