LADDER SHELF

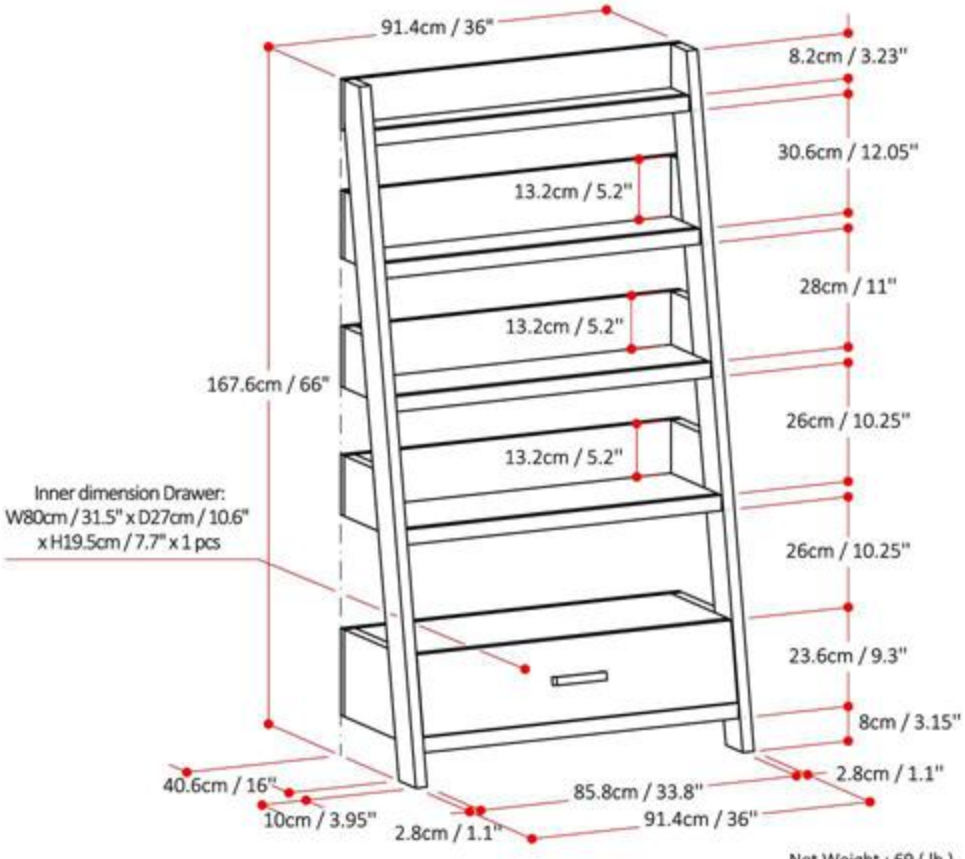

Net Weight : 69 (lb)