ASSEMBLY INSTRUCTION

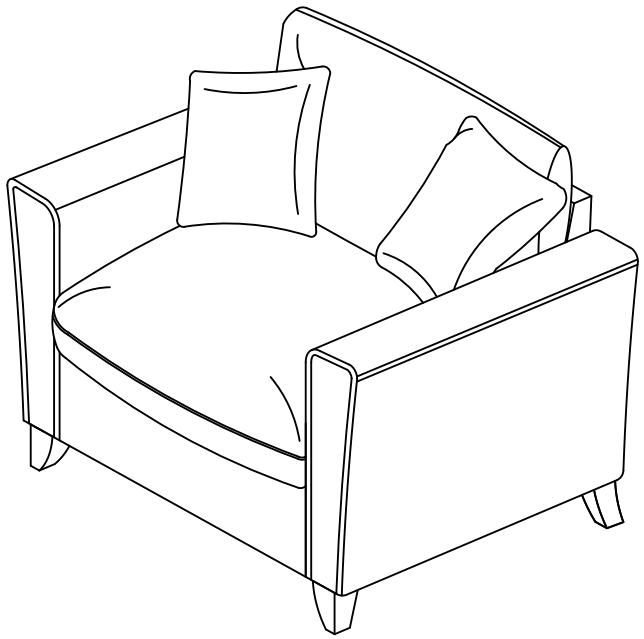

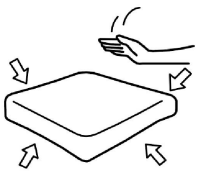

01

Due to package compression for better shipment,the fabric mayhave wrinkles,these wrinkles will gradually disappear.

02

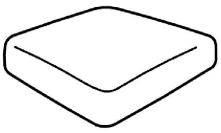

Please be patient and wait for the couch to return to its fluffystate,which will take anywhere from 72 hours to a week.



WARNING

Plastic bags can be dangerous.To avoid danger of suffocation,keep this bag away from babies and children.

ATTENTION

Les sacs plastique peuvent etre dangereux.Pour éviter le danger de suffocation,ne laissez pas ces sacs à la portée des bébés ni des enfants

ADVERTENCIA

Para evitar riesgo de asfixia,mantenga las bolsas de plastico fuera del alcanede los ninos y bebés

ATTENZIONE

Il sacchetto di plastica puoessere pericoloso.Per evitare il pericolo di soffocamento,tieni questo sacchetto lontano da bambini e fanciulli.

VORSICHT

Polybeutel können gefährlich sein.Um Erstickungsgefahr zu vermeiden,bitte diesen Beutel nie in Reichweite von Säuglingen und Kleinkindern ablegen.

PARTS

A	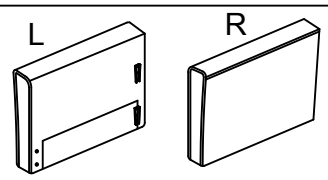	x2	B	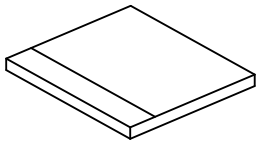	x1
C	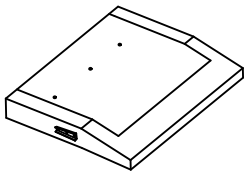	x1	D	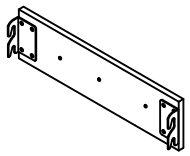	x1
E	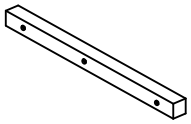	x2	F	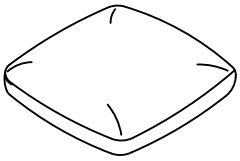	x1
G	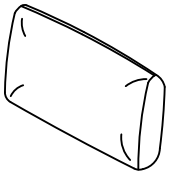	x1	H		x2
I	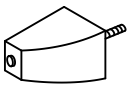	x2	J	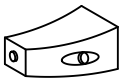	x2
①	 1/4"*38mm	x4	②	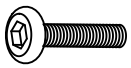 5/16"*25mm	x4
③	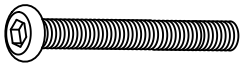 5/16"*76mm	x2	④	 1/4"*16mm	x4
⑤	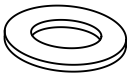 5/16"*19mm	x6	⑥	 1/4"	x4
⑦	 5/16"	x6	⑧	 M4	x1
⑨	 M6	x1			

ASSEMBLY INSTRUCTIONS

STEP 1:

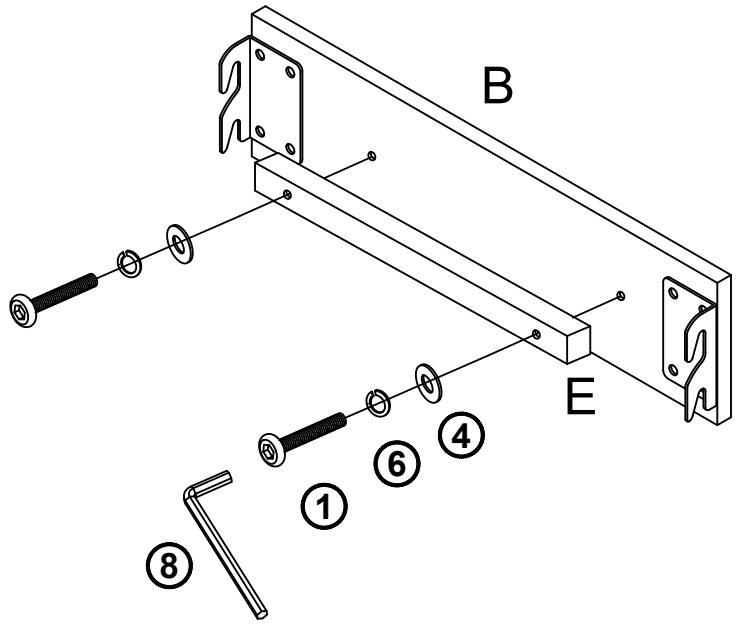

STEP 2:

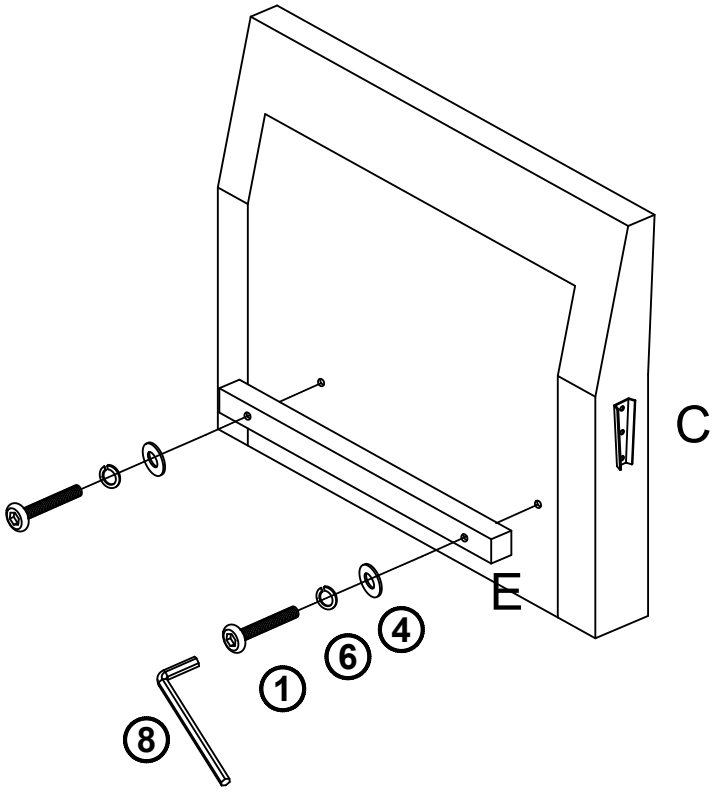

ASSEMBLY INSTRUCTIONS

STEP 3:

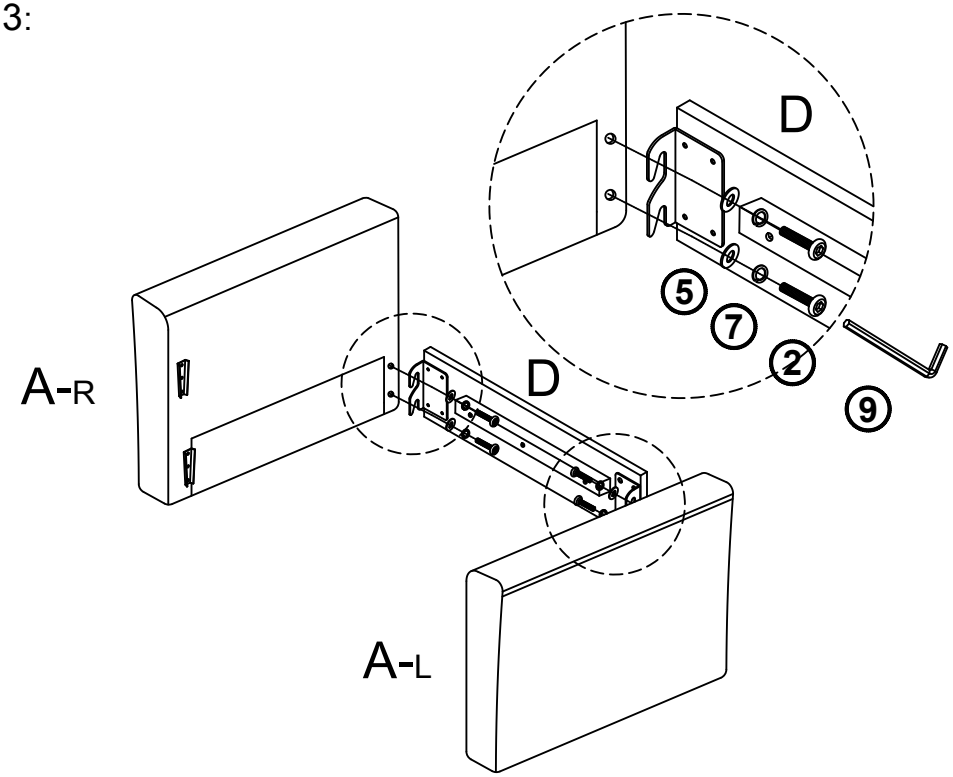

STEP 4:

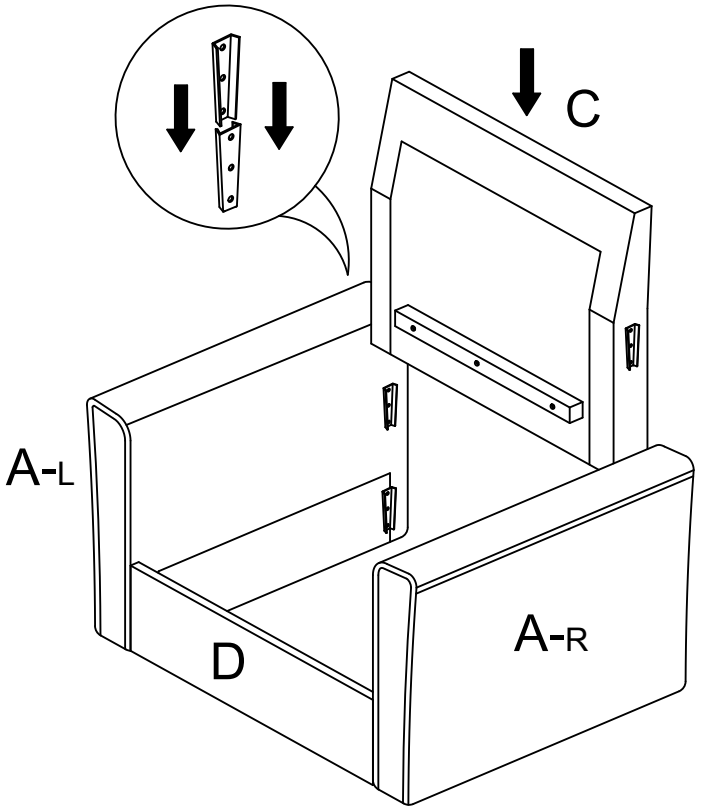

ASSEMBLY INSTRUCTIONS

STEP 5:

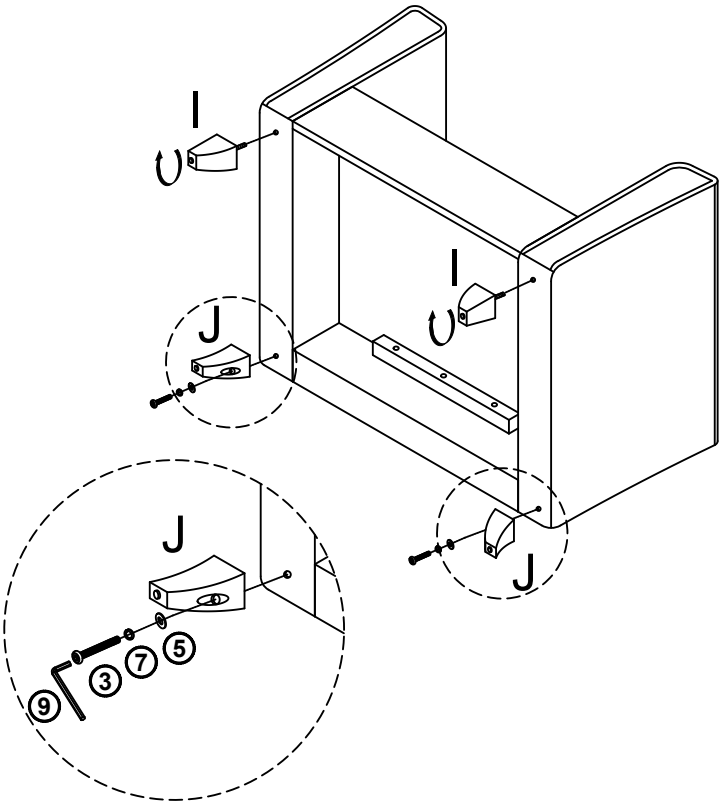

STEP 6:

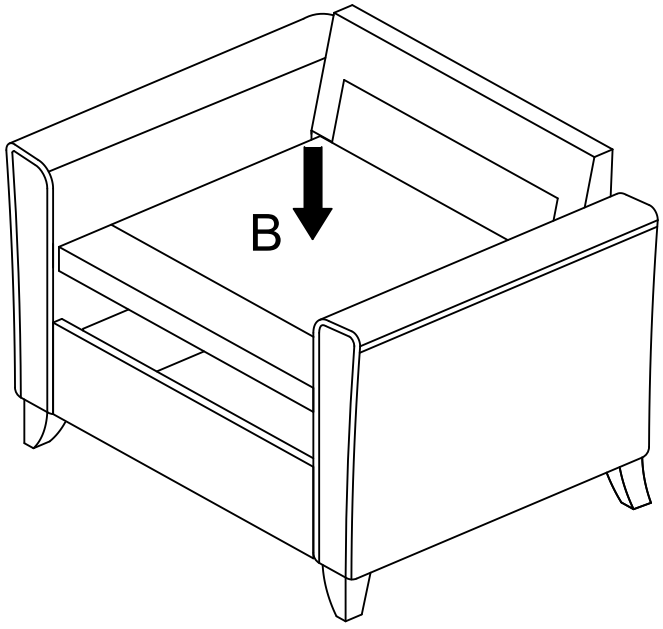

ASSEMBLY INSTRUCTIONS

STEP 7:

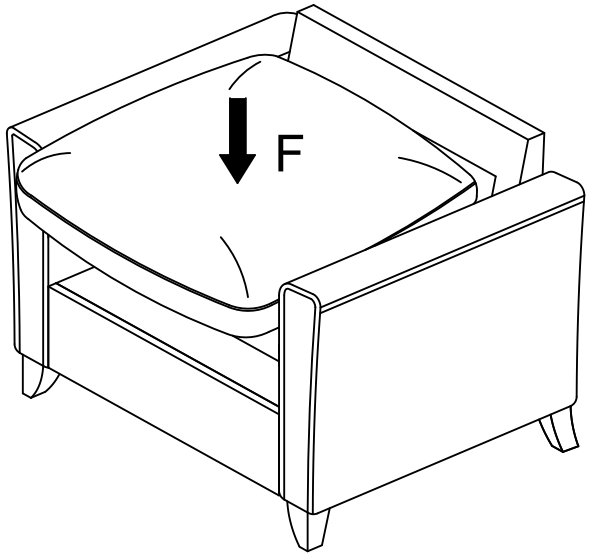

STEP 8:

