Owner Manual

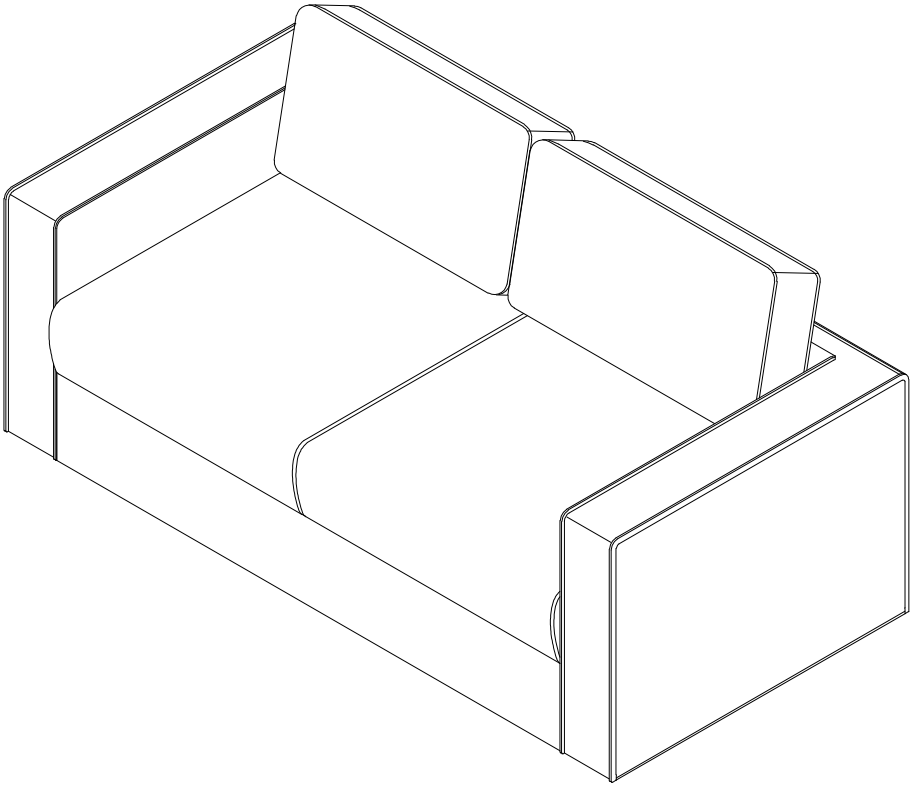

Thank you for purchasing the Sofa. Please read the instructions and warnings carefully before use, to ensure safe and satisfactory operation of this product. We are committed to making great products possible. From our in-house Design Team, to our Buyers, we work together to bring great designs to life. Our expert Product Technologists work collaboratively with our buyers and suppliers to assure the legality, safety and quality of the product we sell. We are all committed to designing and developing products to the highest industry standards. We hope you are happy with your product and welcome any feedback or comments you may have.

EXPLODED DIAGRAM-LOVE SEAT

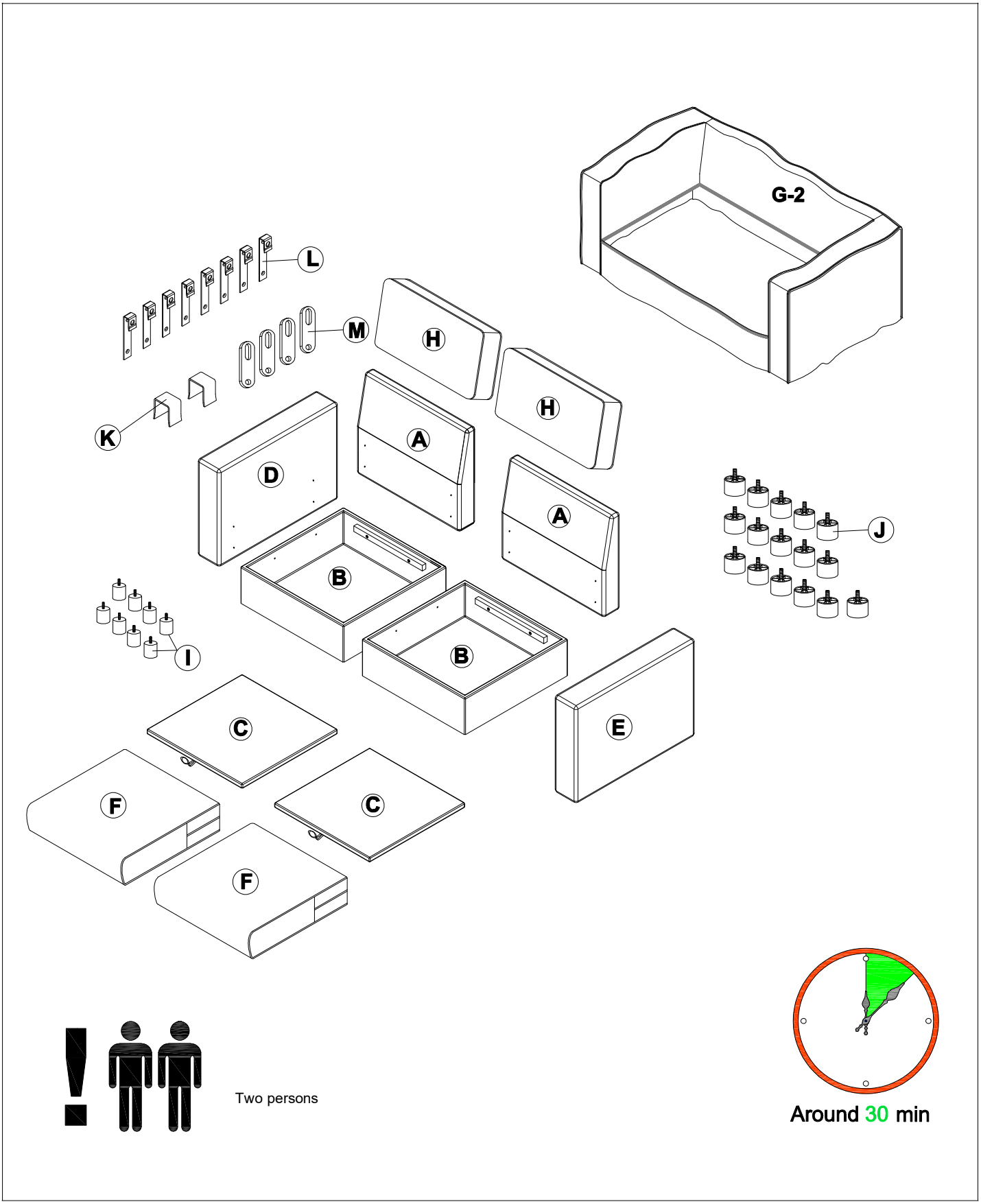

Be sure to check all packing material carefully for small parts, which may have come loose inside the carton during shipment.

PARTS LIST (Carton A)

A x2 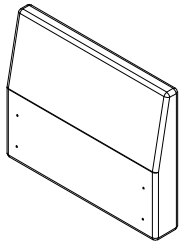 Back Frame	B x2 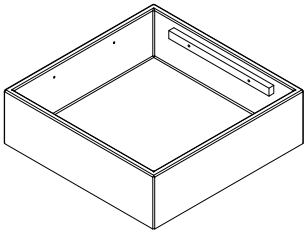 Seat Frame	C x2 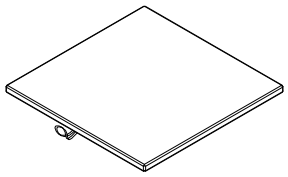 Seat Frame	F x2 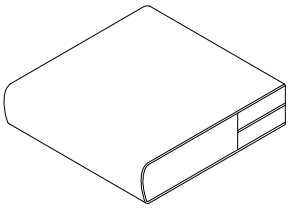 Seat Cushion
H x2 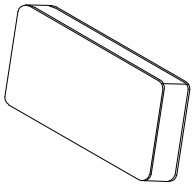 Back Cushion	I x8 Support Wood	J x12 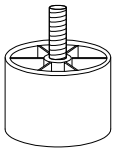 Plastic Leg	K x2 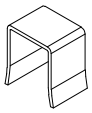 U-shape Insert
L x4 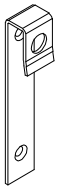 Hook	M x2 Connector		

HARDWARE LIST (in Carton A)

1 x12 Bolt M8*25mm	2 x12 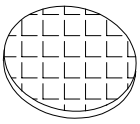 Felt Mat Ø40mm	3 x1 Allen Wrench 5#	

SPARE LIST (in Carton A)

1 x1 Bolt M8*25mm			

PARTS LIST (Carton C)

D x1 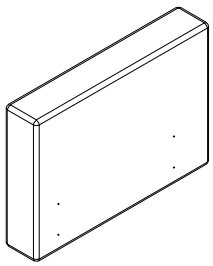 Left Armrest	E x1 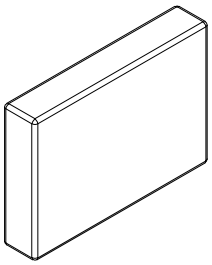 Right Armrest	G-2 x1 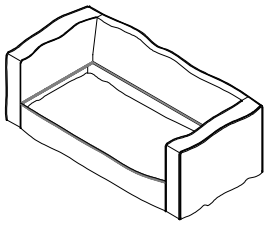 2 Seat Slipcover	J x4 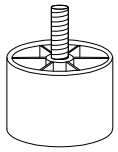 Plastic Leg
L x4 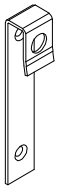 Hook	M x2 Connector		

HARDWARE LIST (in Carton C)

1 x12 Bolt M8*25mm	2 x4 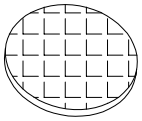 Felt Mat Ø40mm	3 x1 Allen Wrench 5#	

SPARE LIST (in Carton C)

1 x1 Bolt M8*25mm			

STEP 1

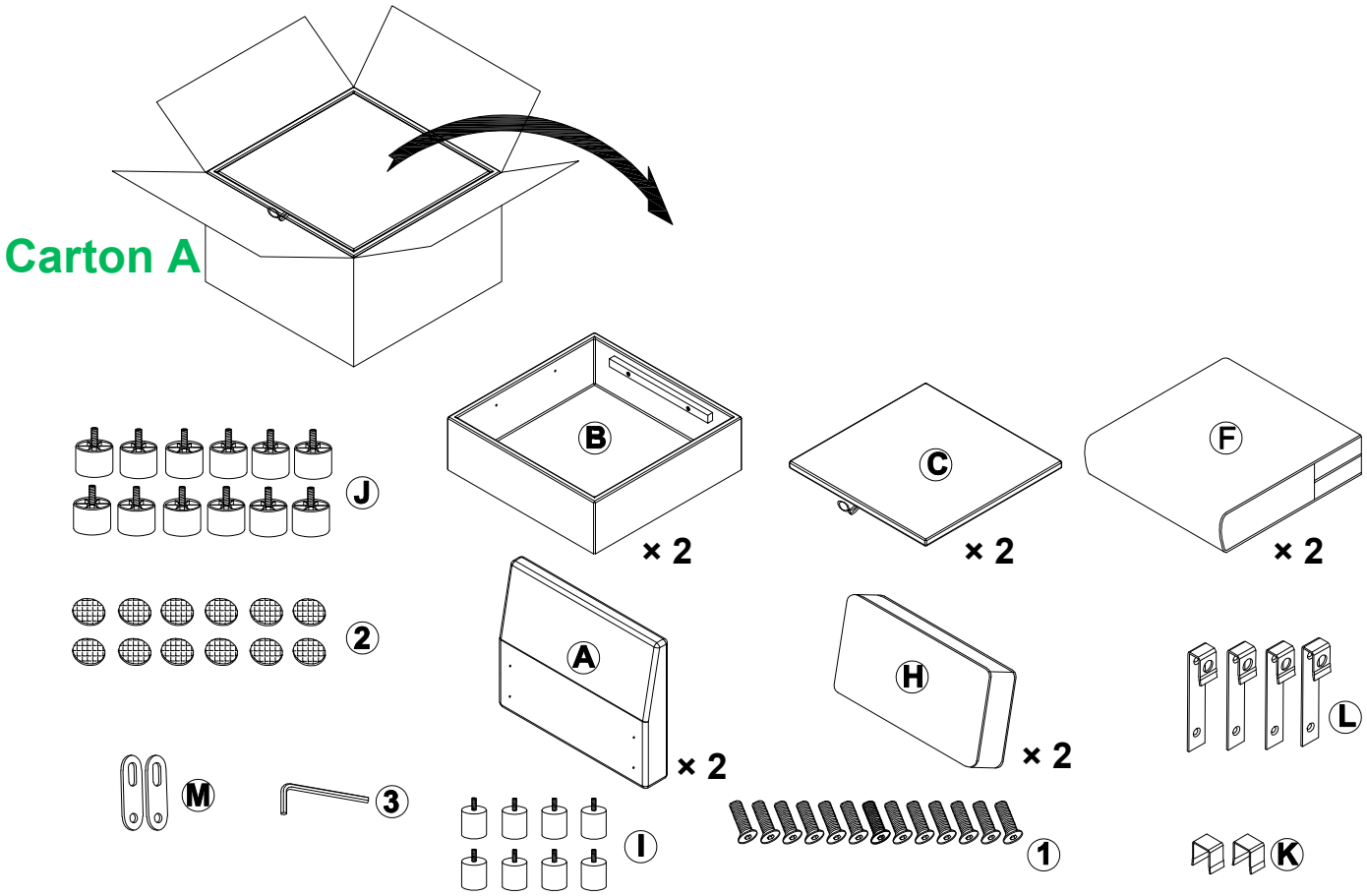

STEP 2

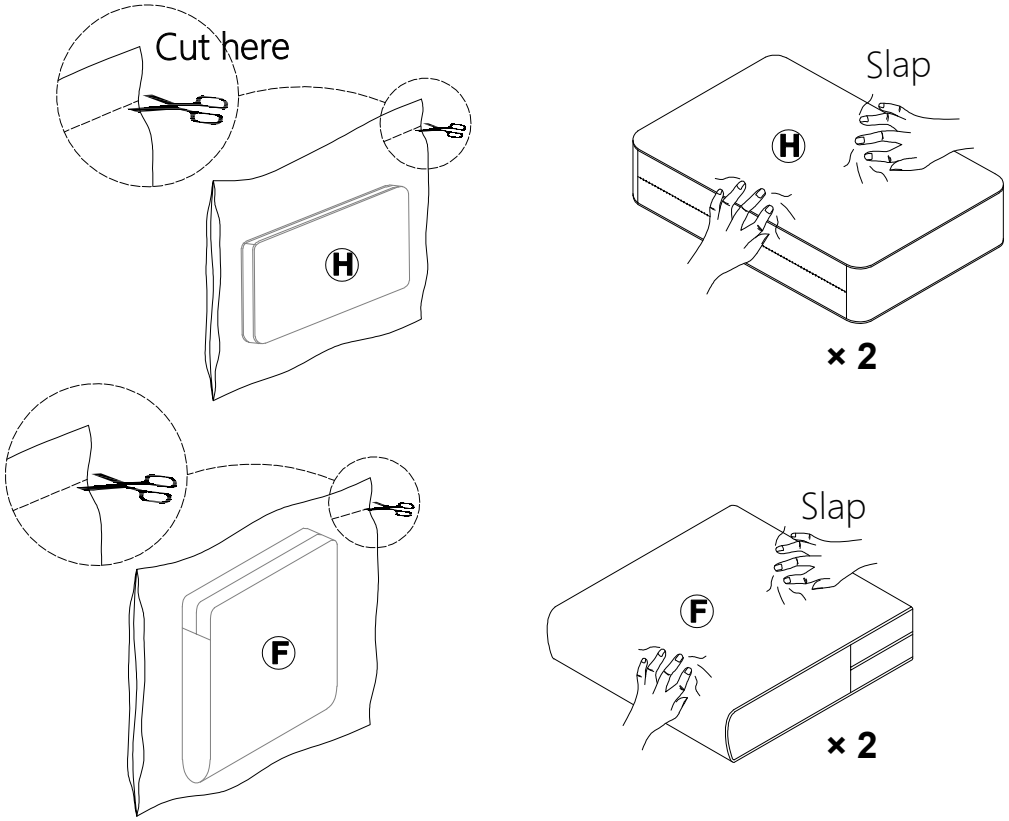

NOTE: 48 hours to fully expand after being unpackaged !

STEP 3

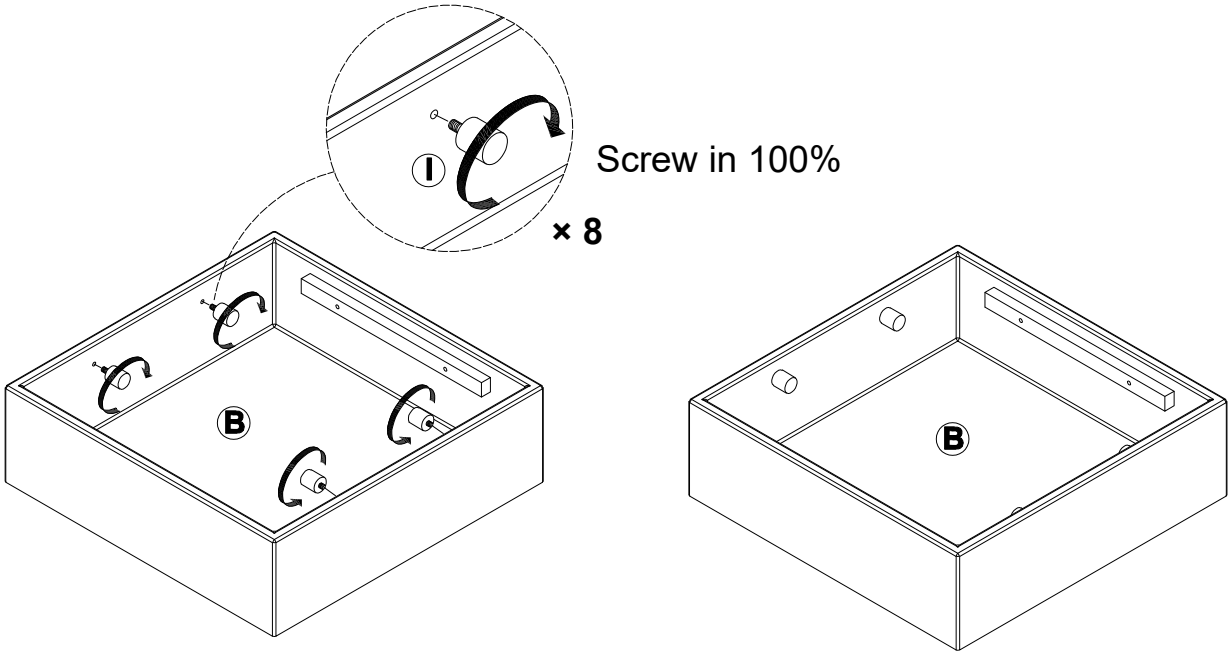

STEP 4

1		x 8
3		x 1
L		x 4

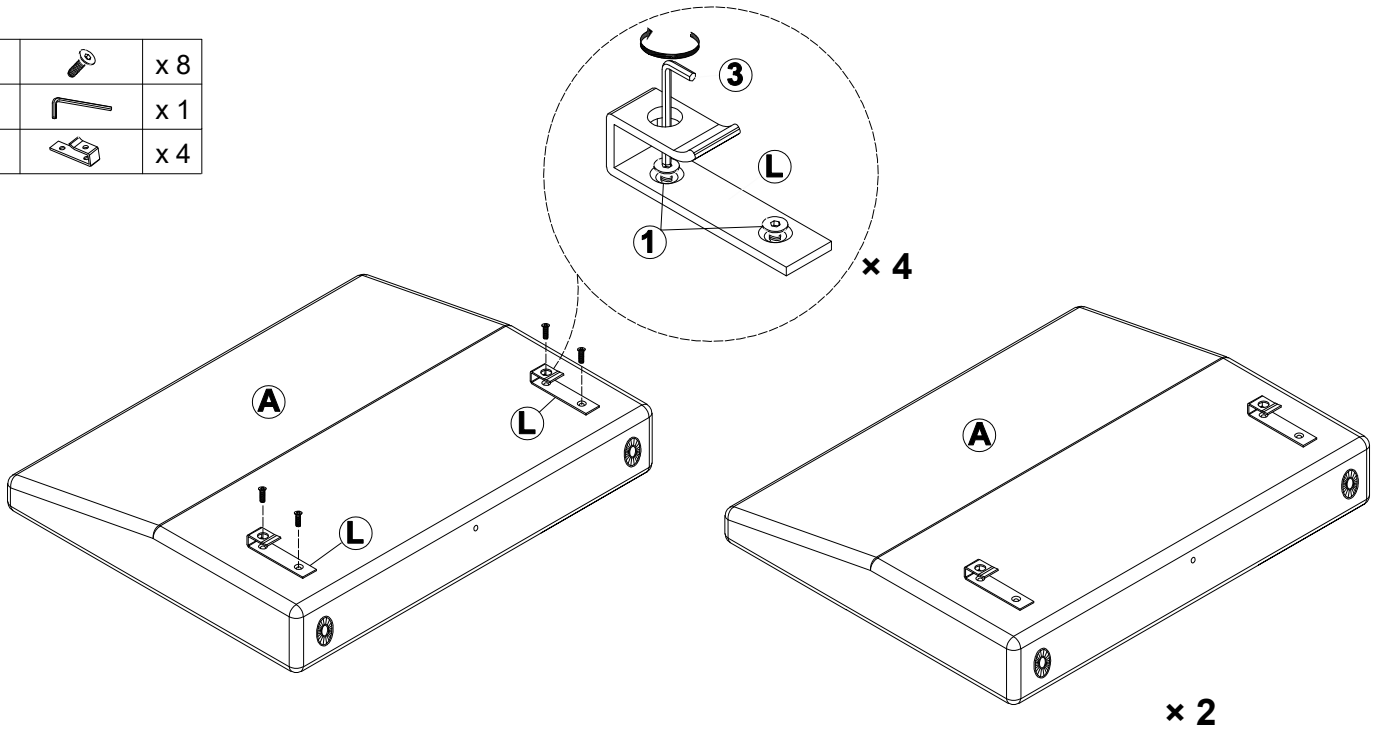

STEP 5

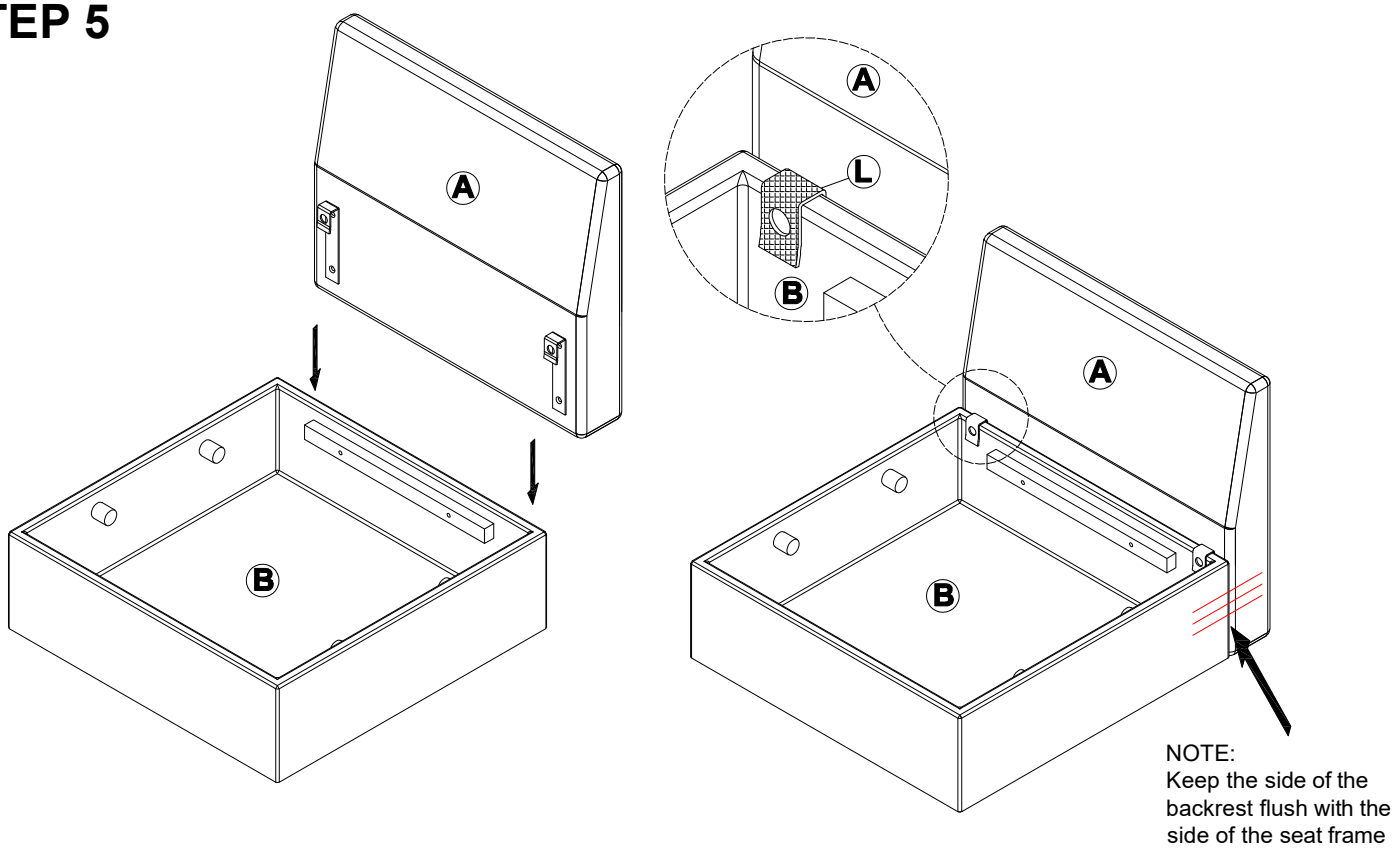

STEP 6

1		x 4
M		x 2

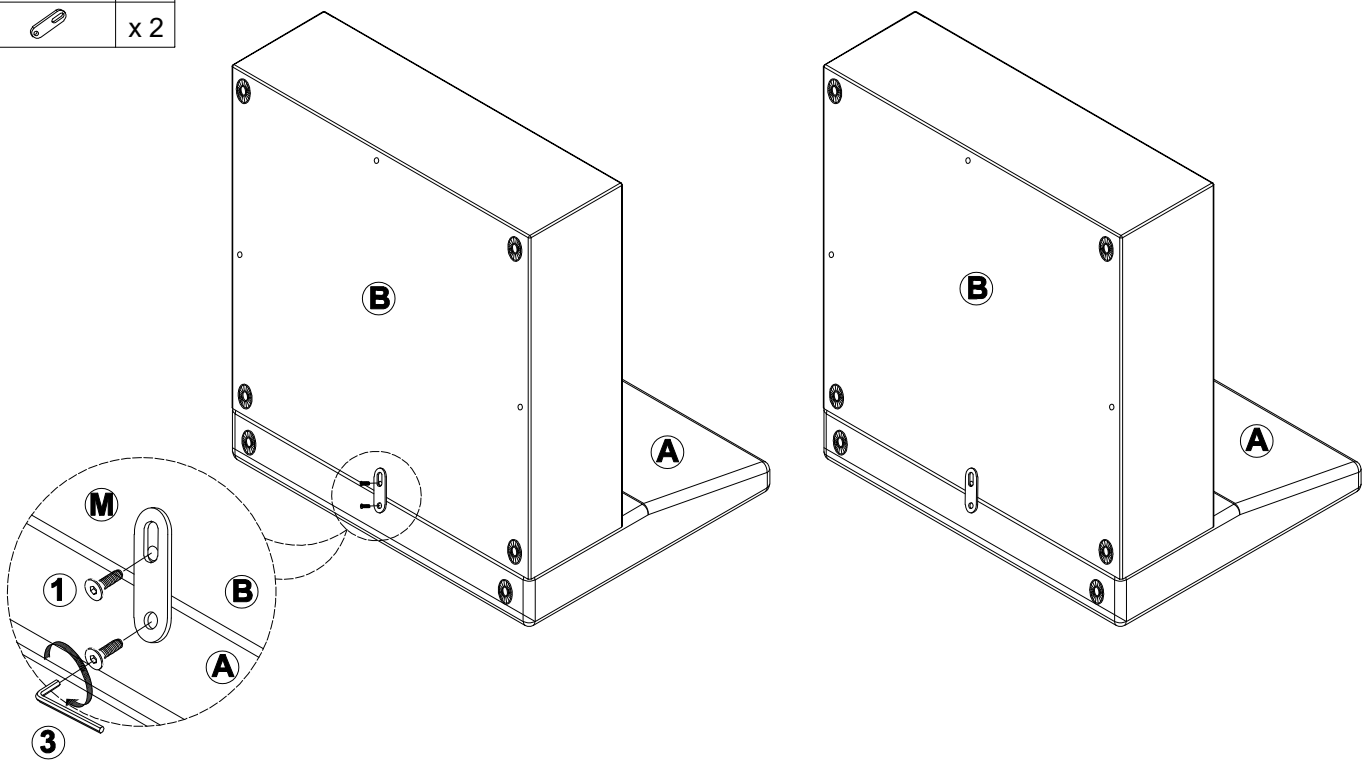

STEP 7

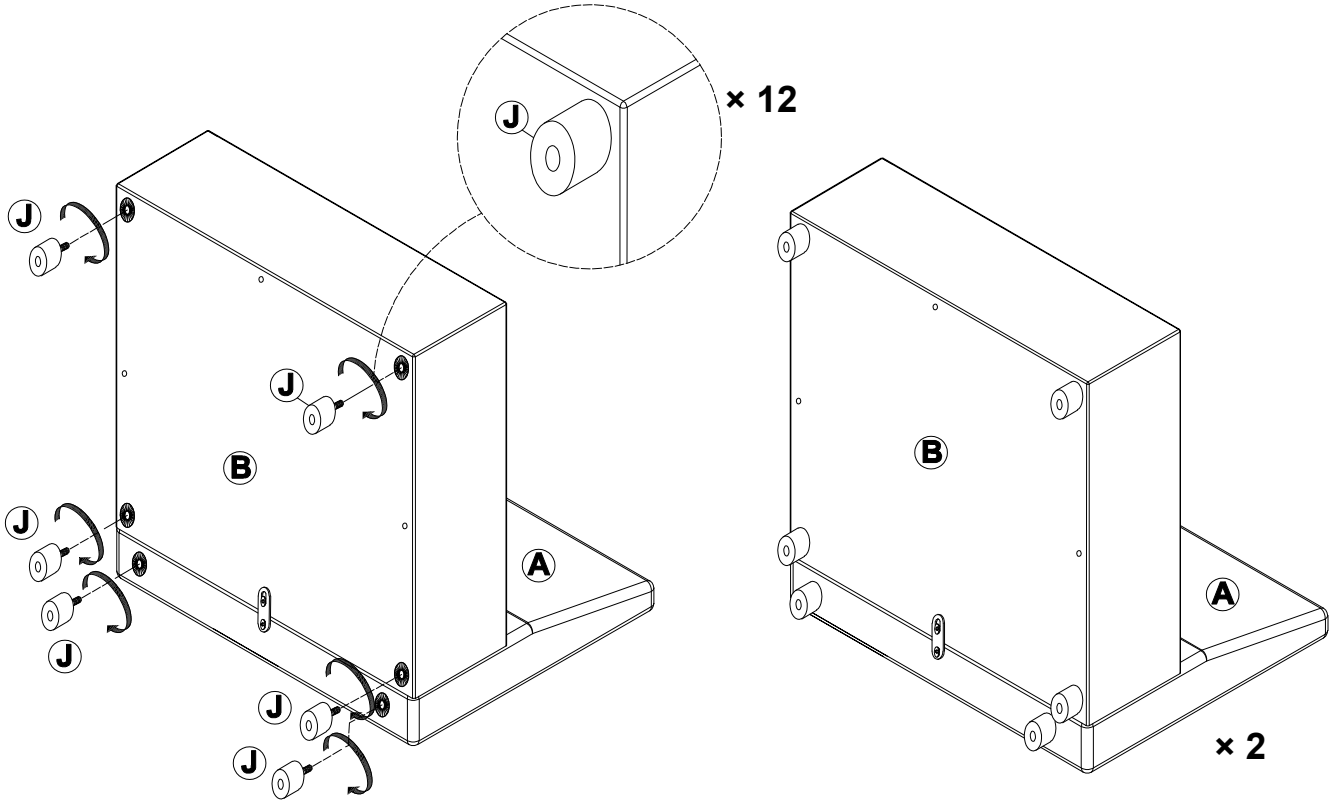

STEP 8

2		x 12

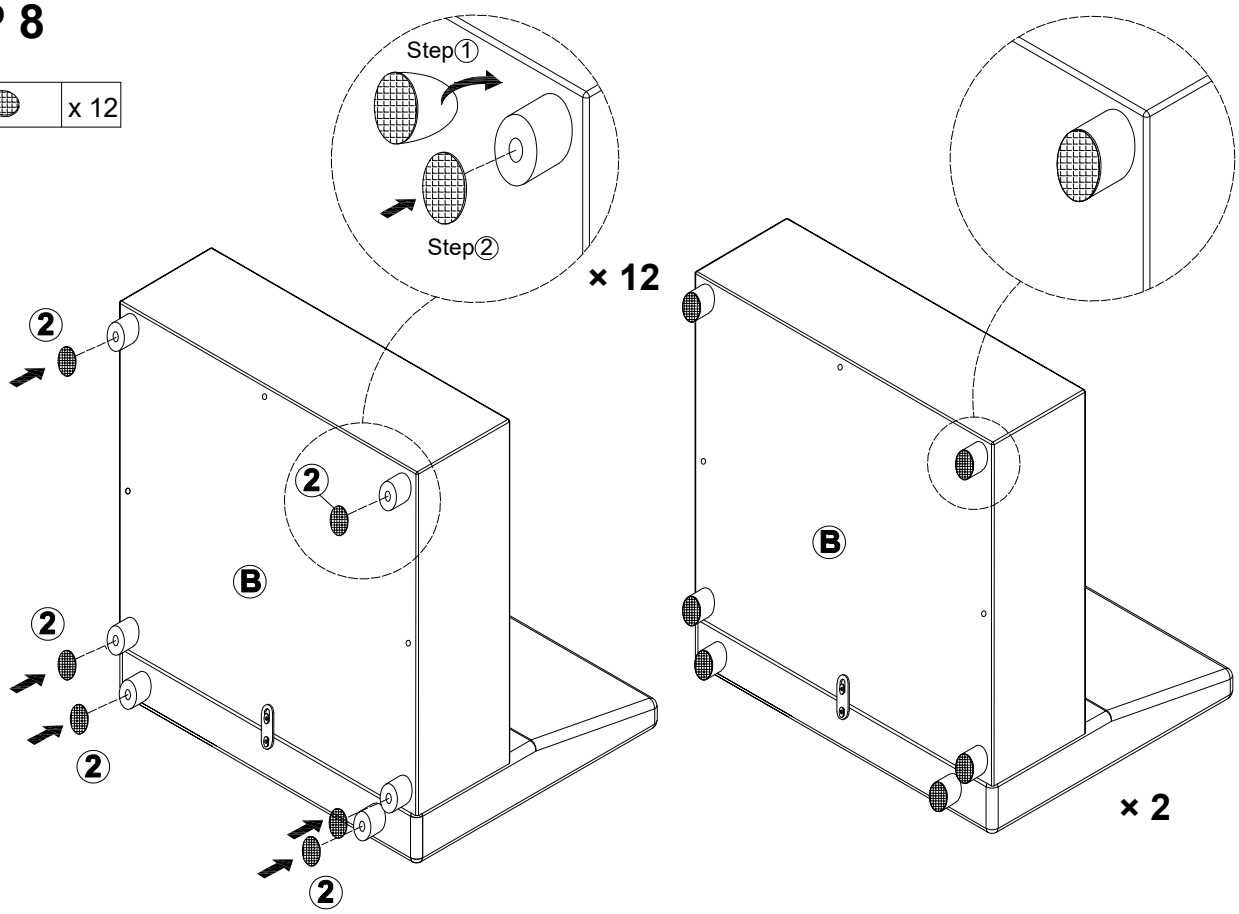

STEP 9

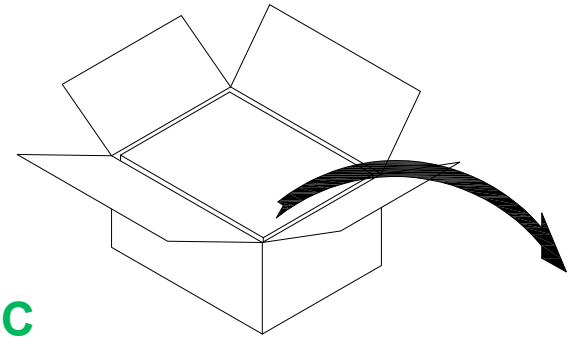

Carton C

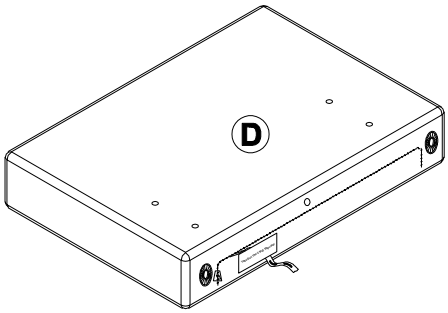

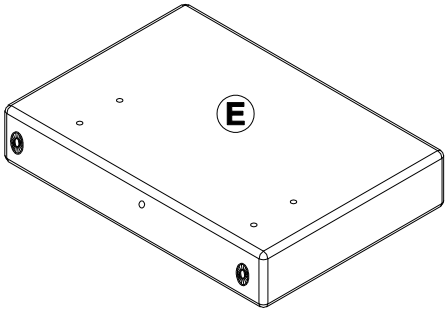

STEP 10

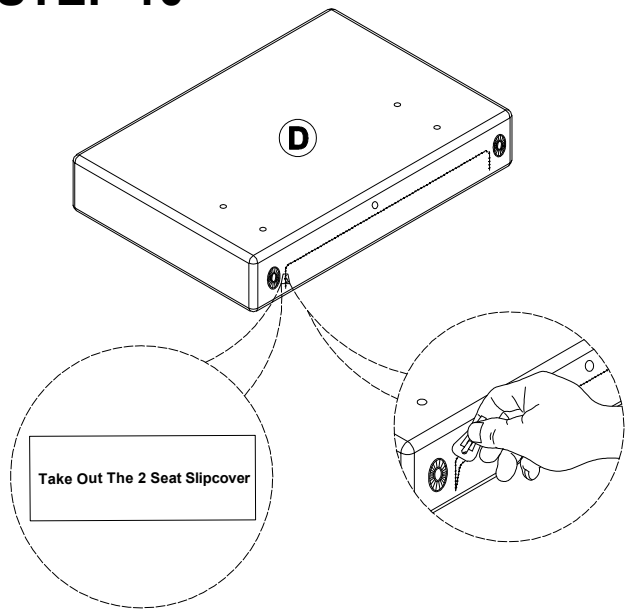

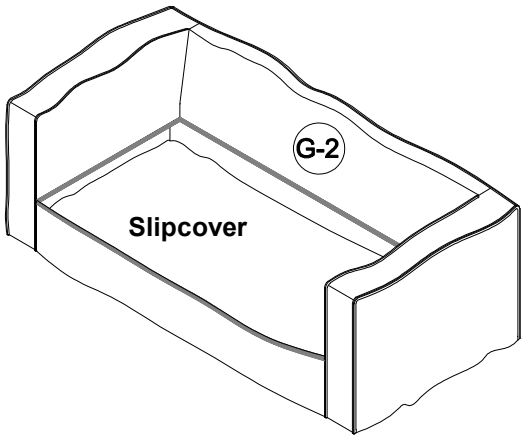

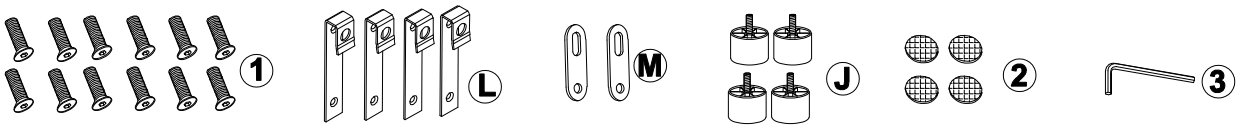

STEP 11

1		x 8
3		x 1
L		x 4

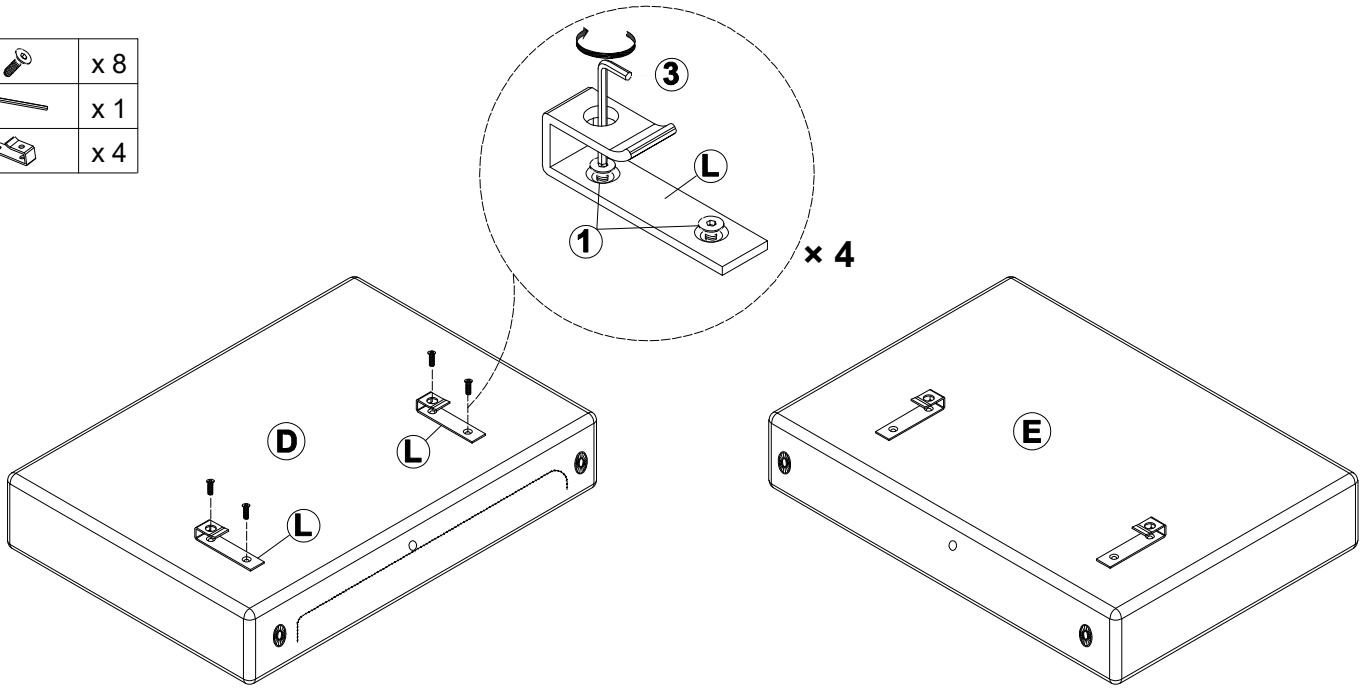

STEP 12

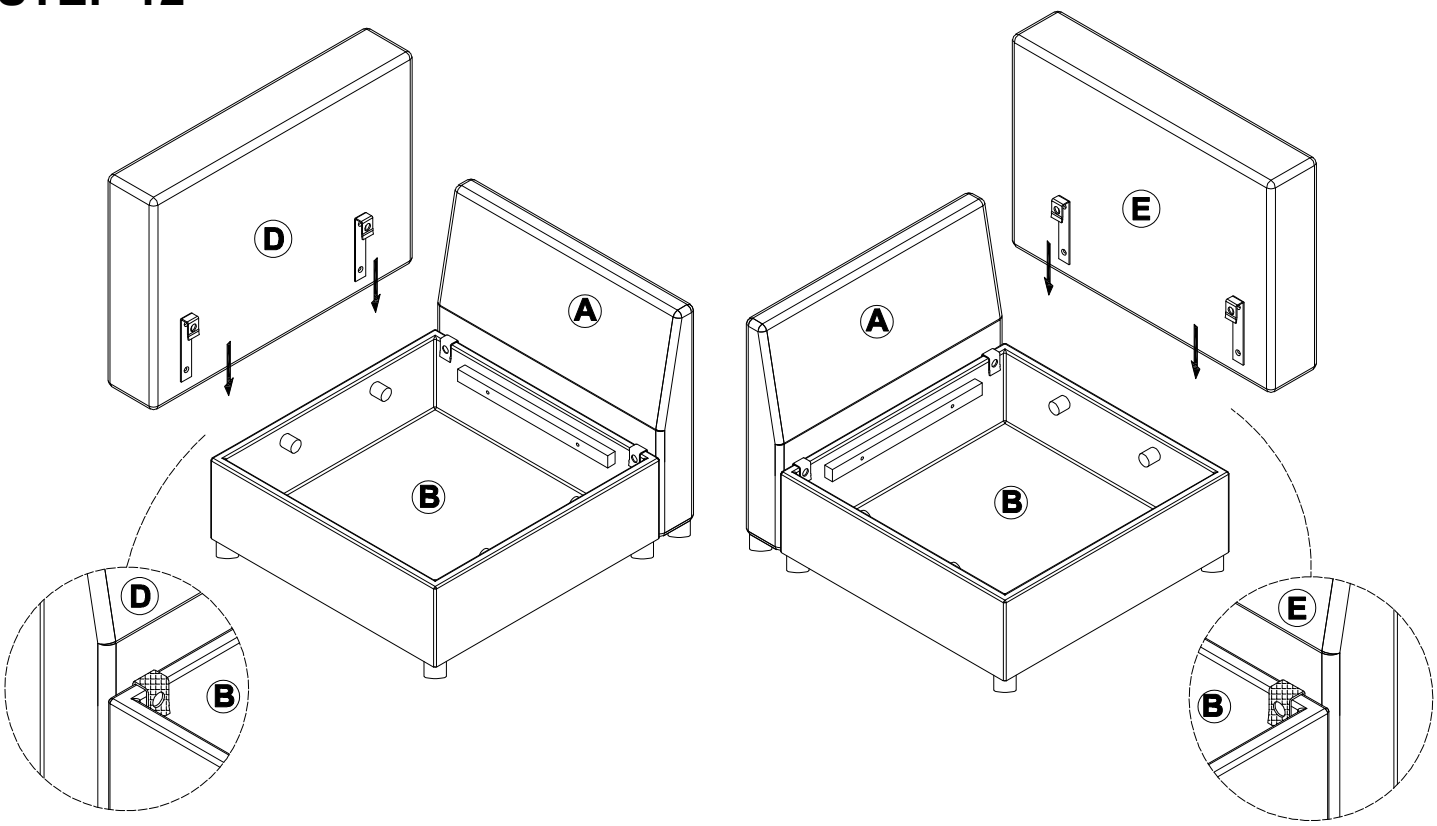

STEP 13

1		x 4
M		x 2

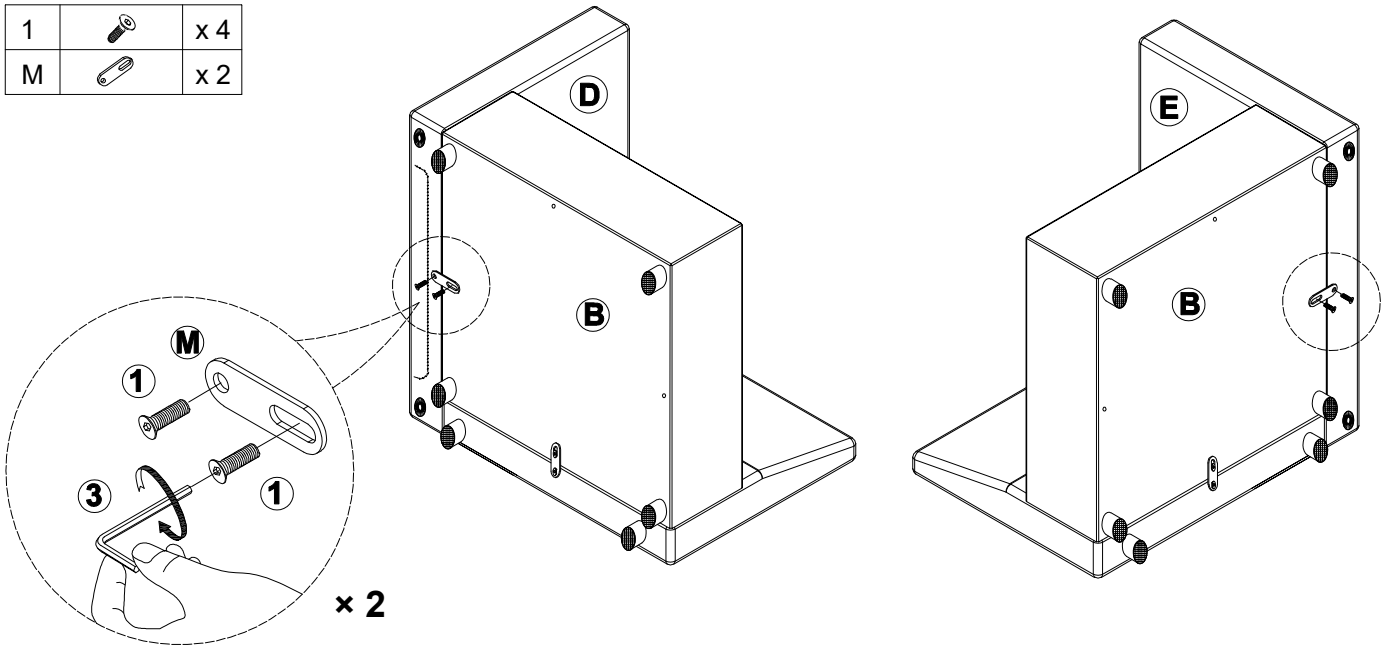

STEP 14

2		x 4

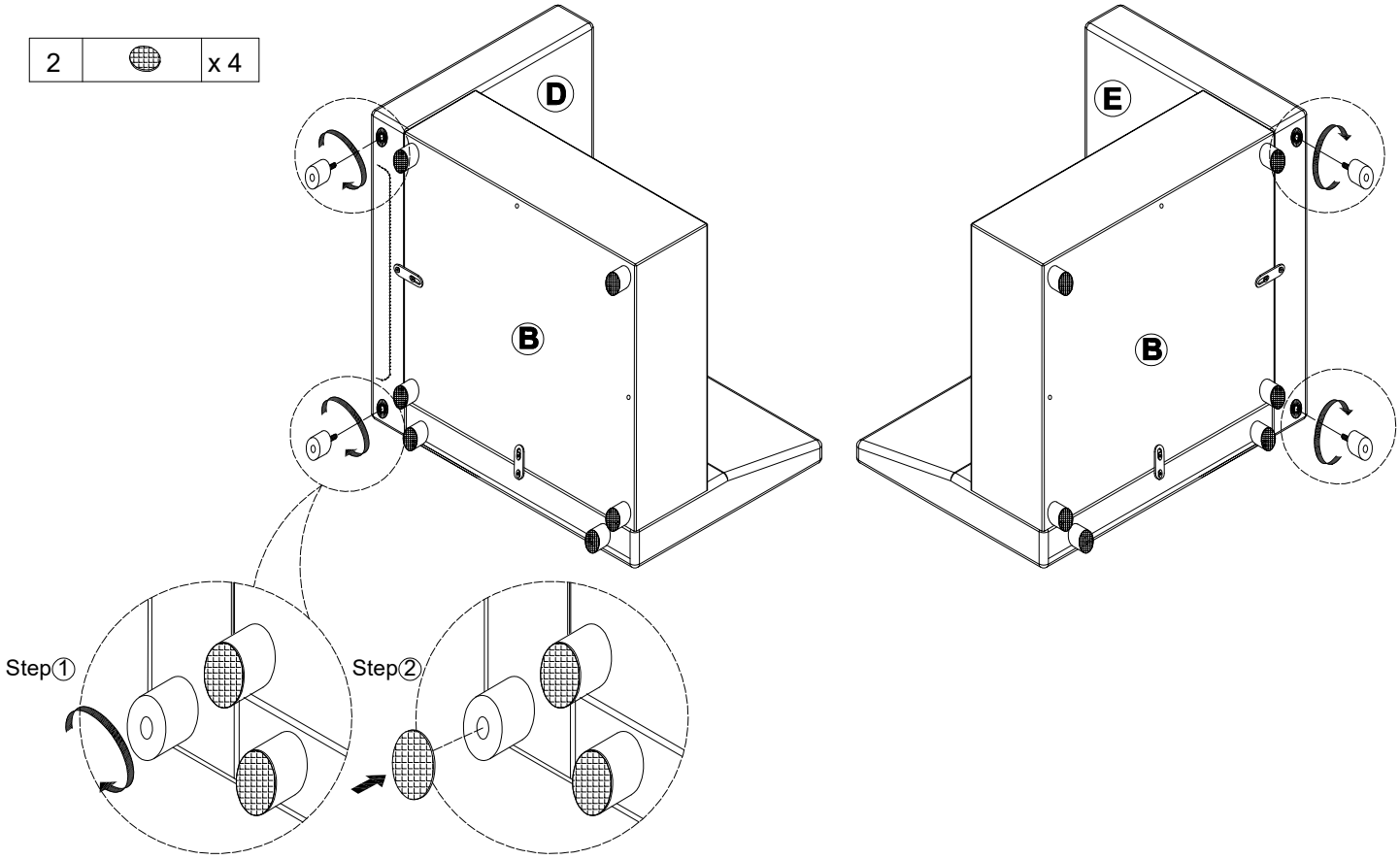

STEP 15

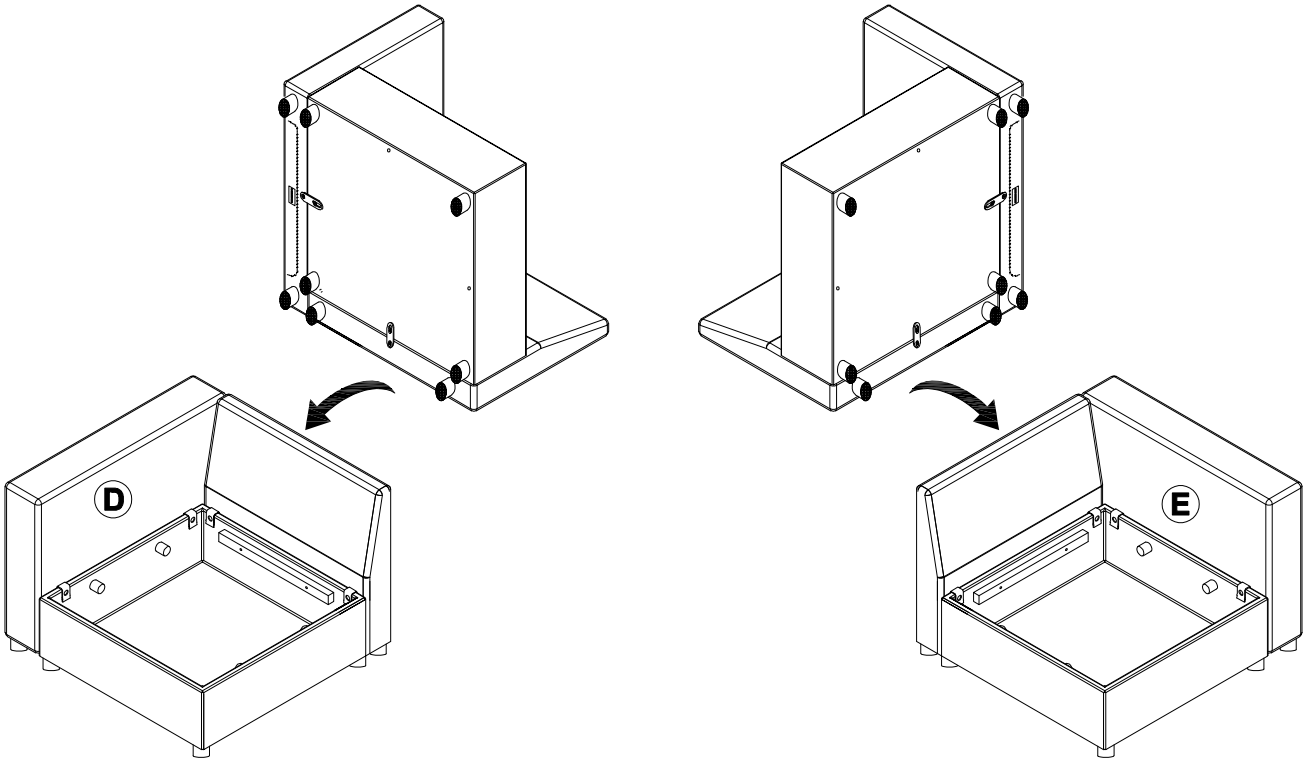

STEP 16

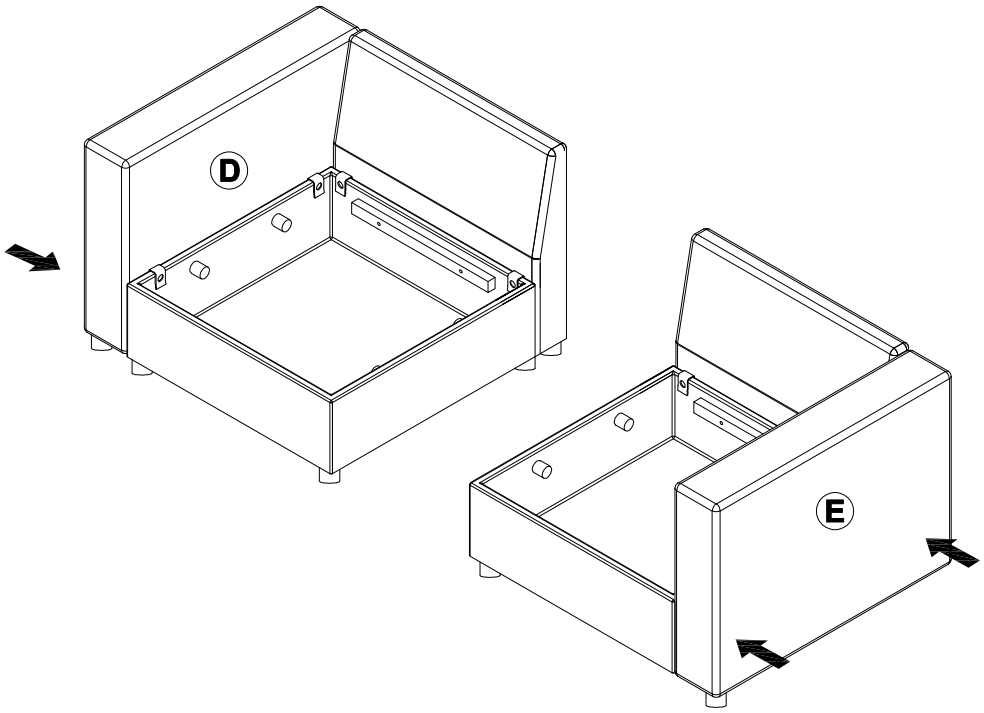

STEP 17

K		x 2

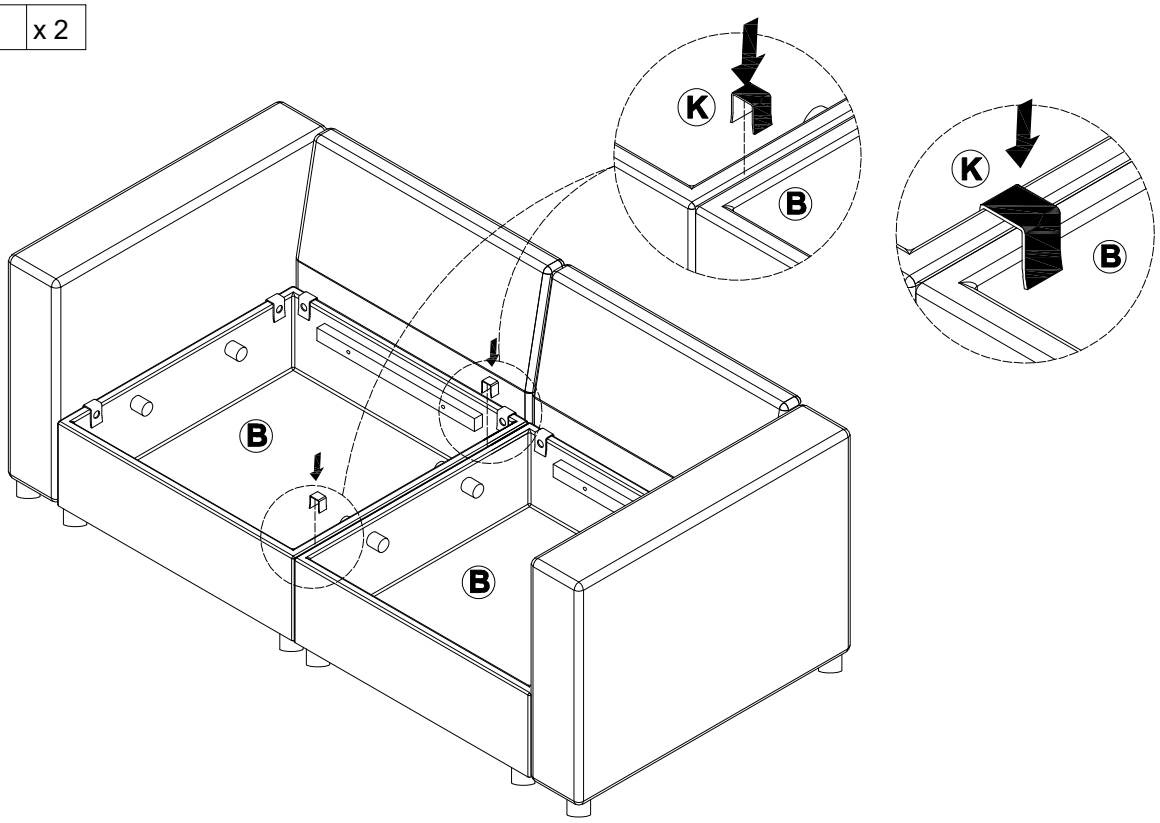

STEP 18

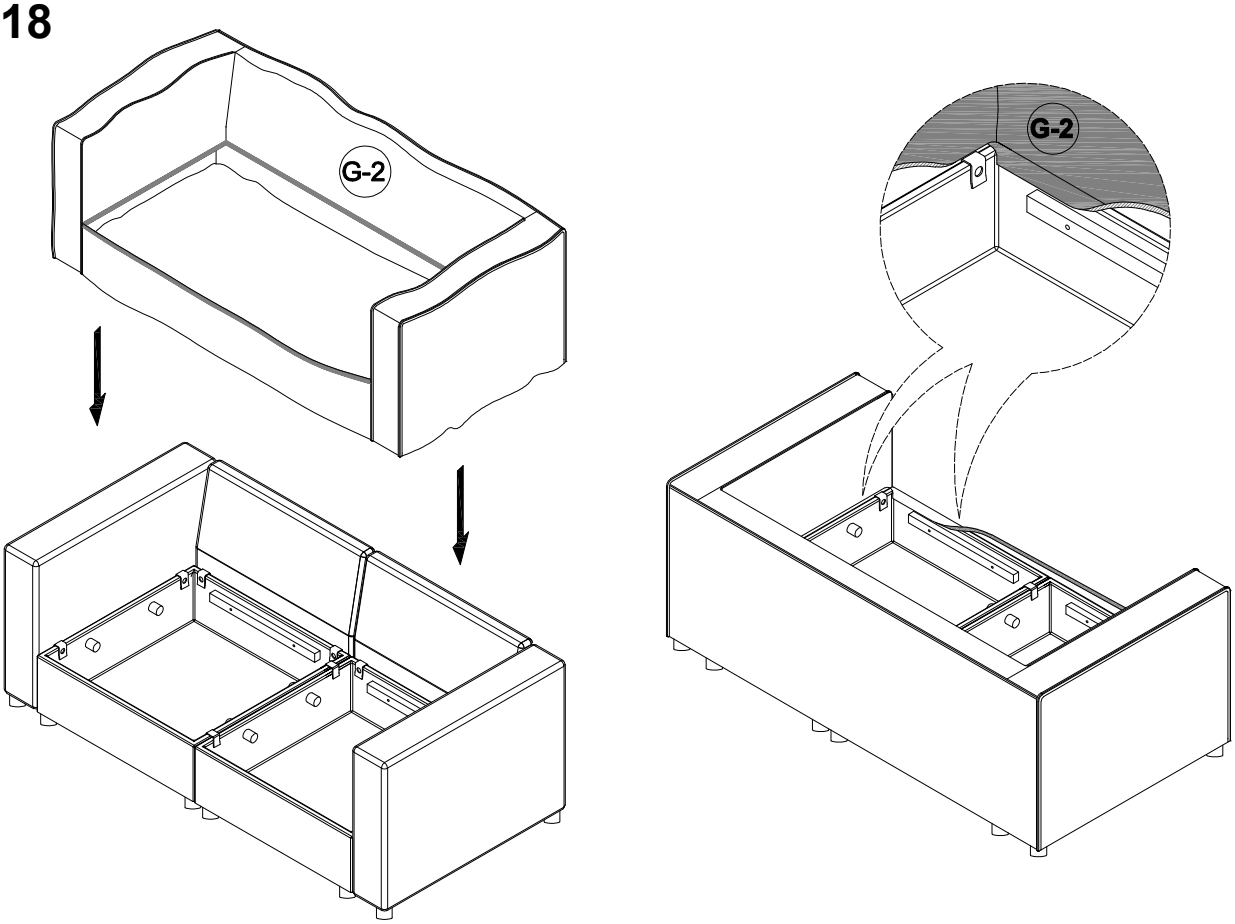

STEP 19

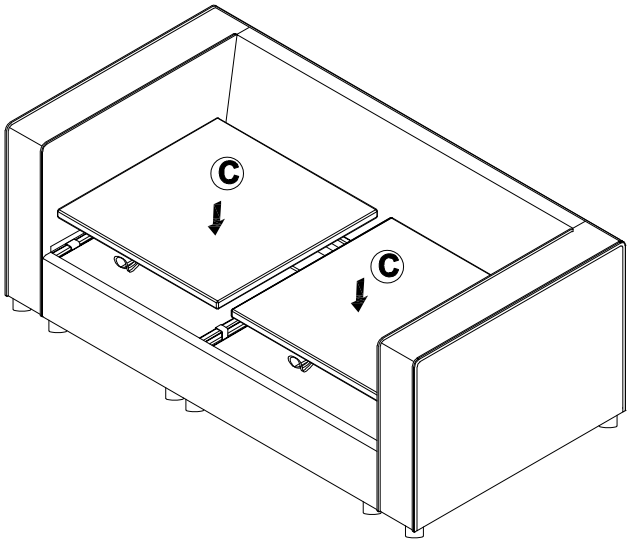

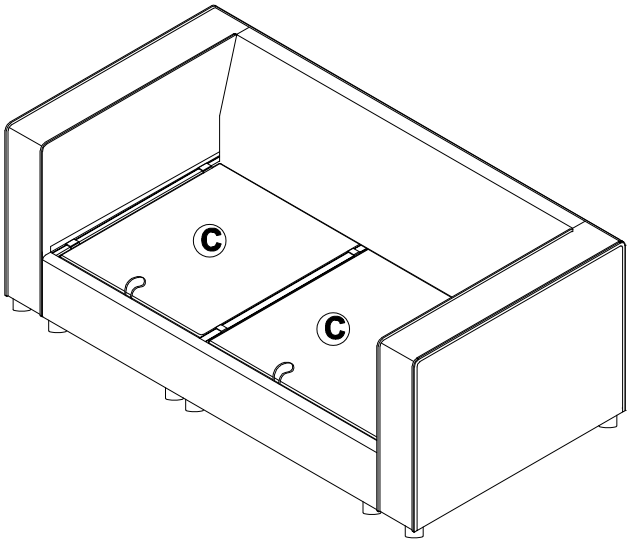

STEP 20

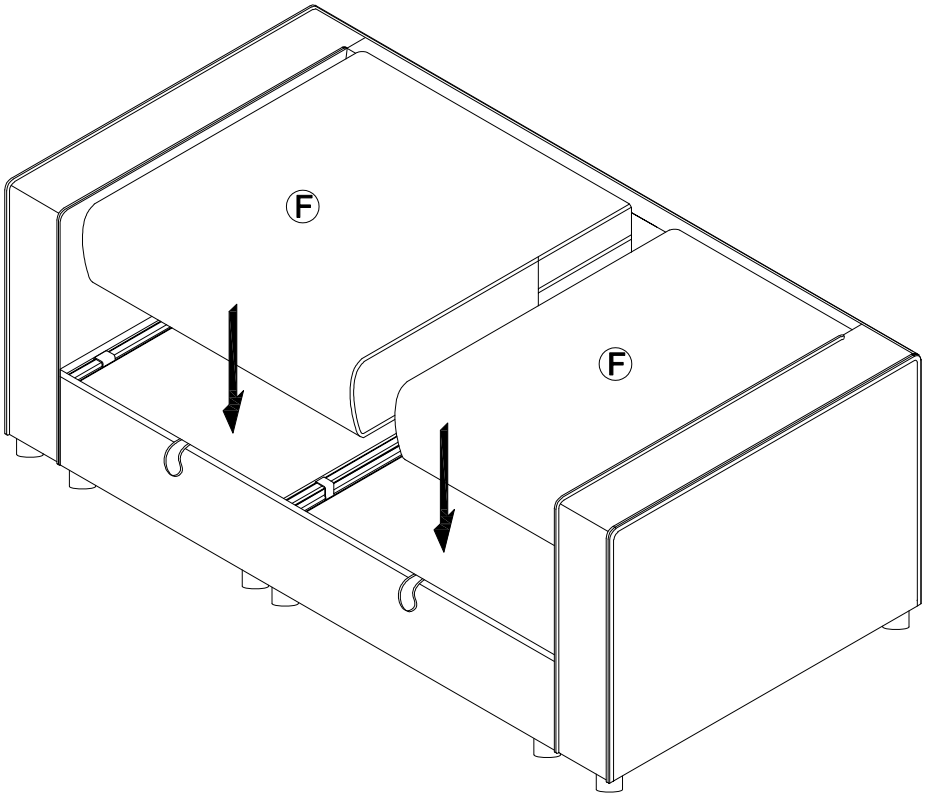

STEP 21

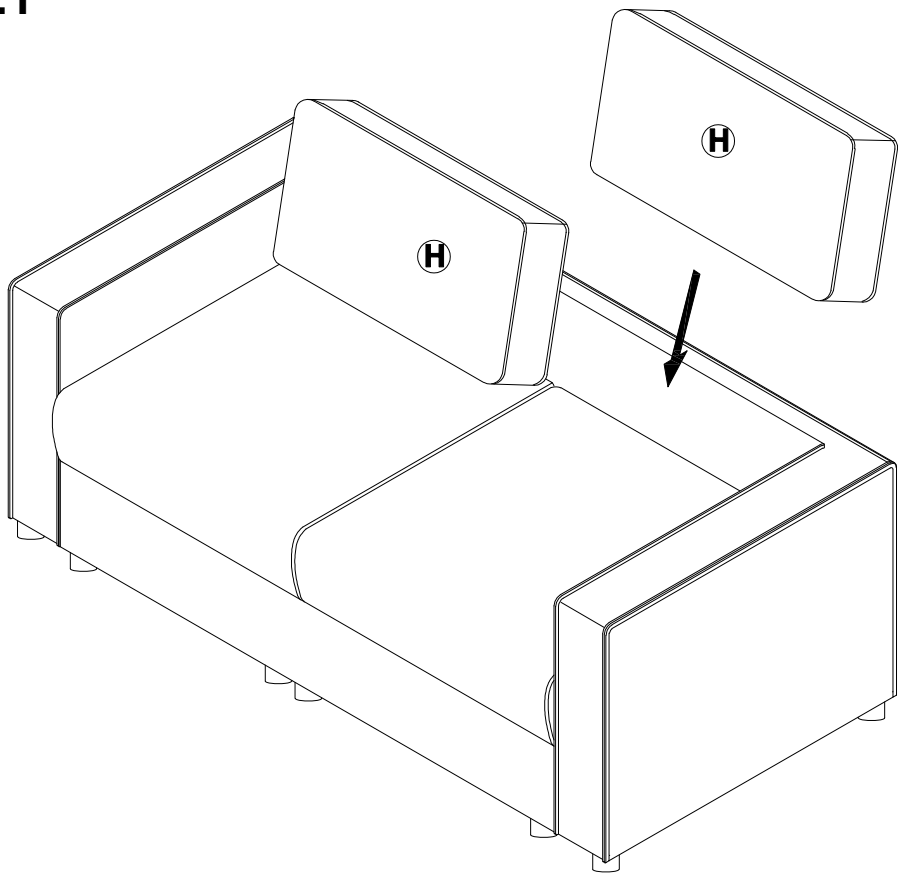

STEP 22

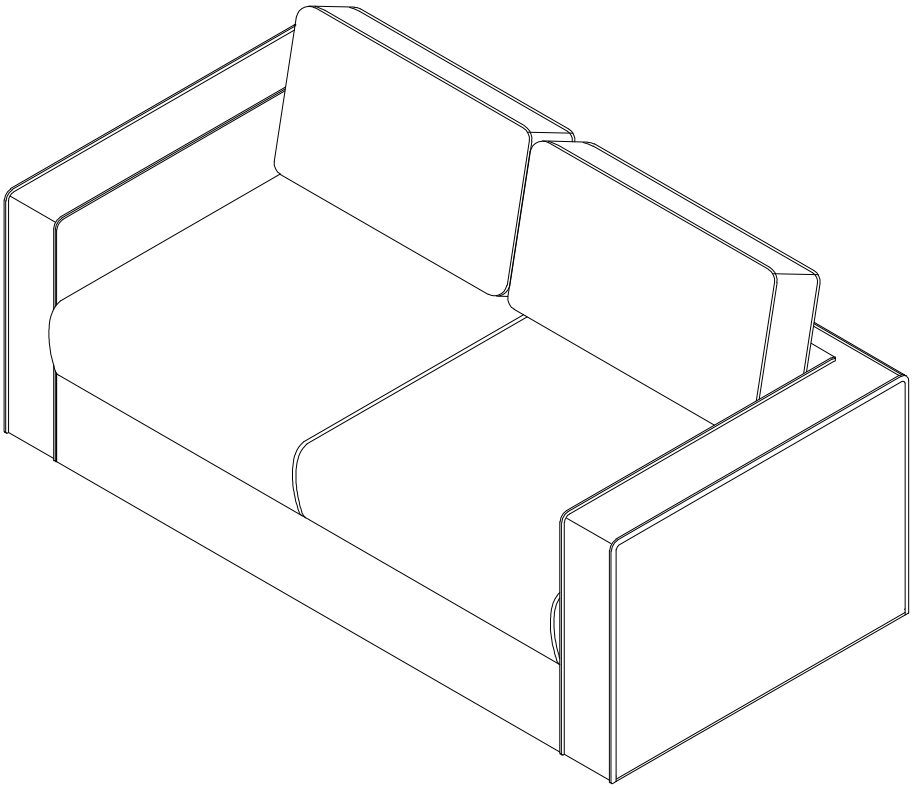

MAINTAINANCE AND WARNING ⚠

- Keep furniture away from heat.
- Do not clean furniture with harsh cleansers or polish. Do not use detergents, Solvents, abrasives, spray packs or leather cleaner. Use non-color mild soap with warm water clean spills(Mix 1:10 soap to water)
- Do not place furniture under direct sunlight, material will possibly fade over time.
- Do not use on site dry Cleaning machine.
- Children should not climb or jump on the furniture.
- Do not write on furniture without a padded barrier to protect the surface.
- Not for commercial use, For residential use only.
- The maximum load is 750 LBS.

WARRANTY

We strive to offer high quality products, and we also try our best to satisfy each and every customer that orders from us with product or service as needed. We provide 30 days warranty starting from the time you receive the item. Each customer must provide a record of their order such as the order number, or item receipt for any items that are out of the warranty period you may also still receive replacement parts by purchasing them with our company if they are available.

Are you having difficulty with assembly? Missing parts? Please send email with your order No.

For return, please check the return policy with the retailer or market place you bought from. Appreciate your purchasing from us. Pop up your life by our furniture piece!