RECLINING SECTIONAL SOFA

ASSEMBLY INSTRUCTIONS

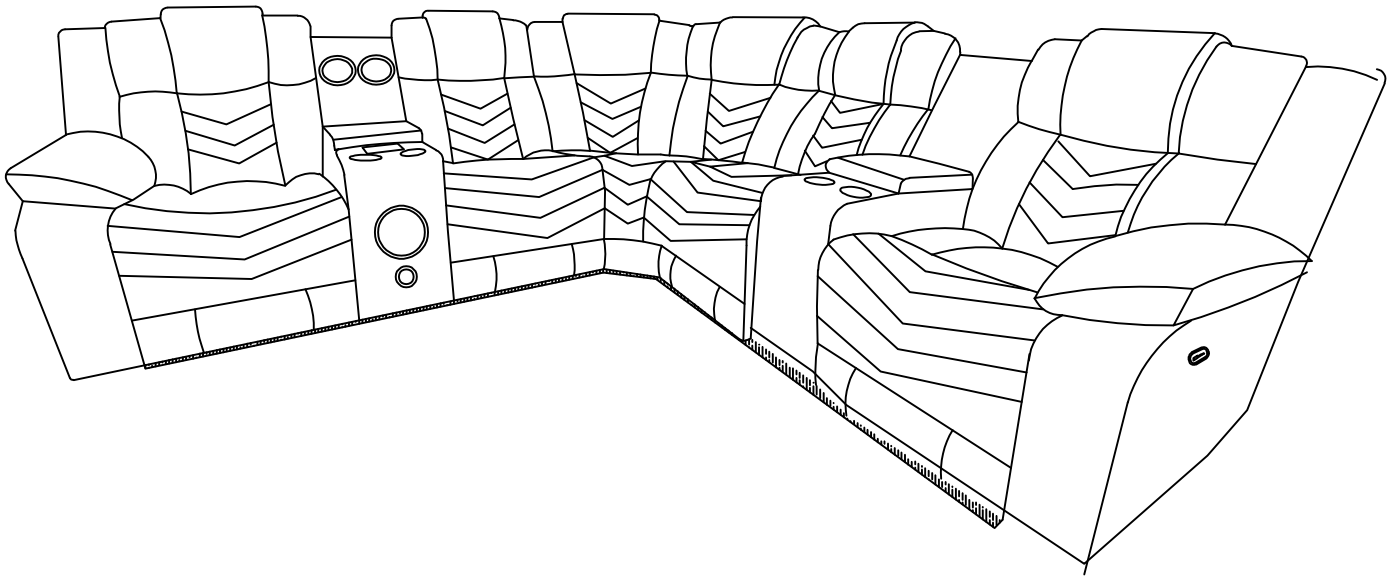

Thanks for your purchasing.

- Please read the instruction completely before assembly.
- Please do not throw away any of the packaging or the instruction until you have all the components and when the furniture is fully assembled.
- Considering the size and weight of the sofa, we recommend two adults to assemble the sofa, on a carpeted or padded area.
- Keep all components and packaging out of reach of children or animals to avoid risk of choking or suffocation.
- Please keep children away from plastic bag or any small pieces of stuff.
- Cushions should be regularly maintained for perfect use.
- 2 people to lift the sofa if you want to move it, do not push or pull directly

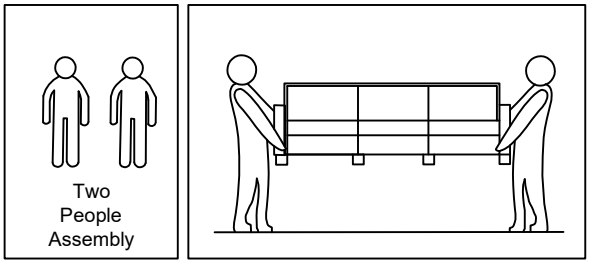

Components:

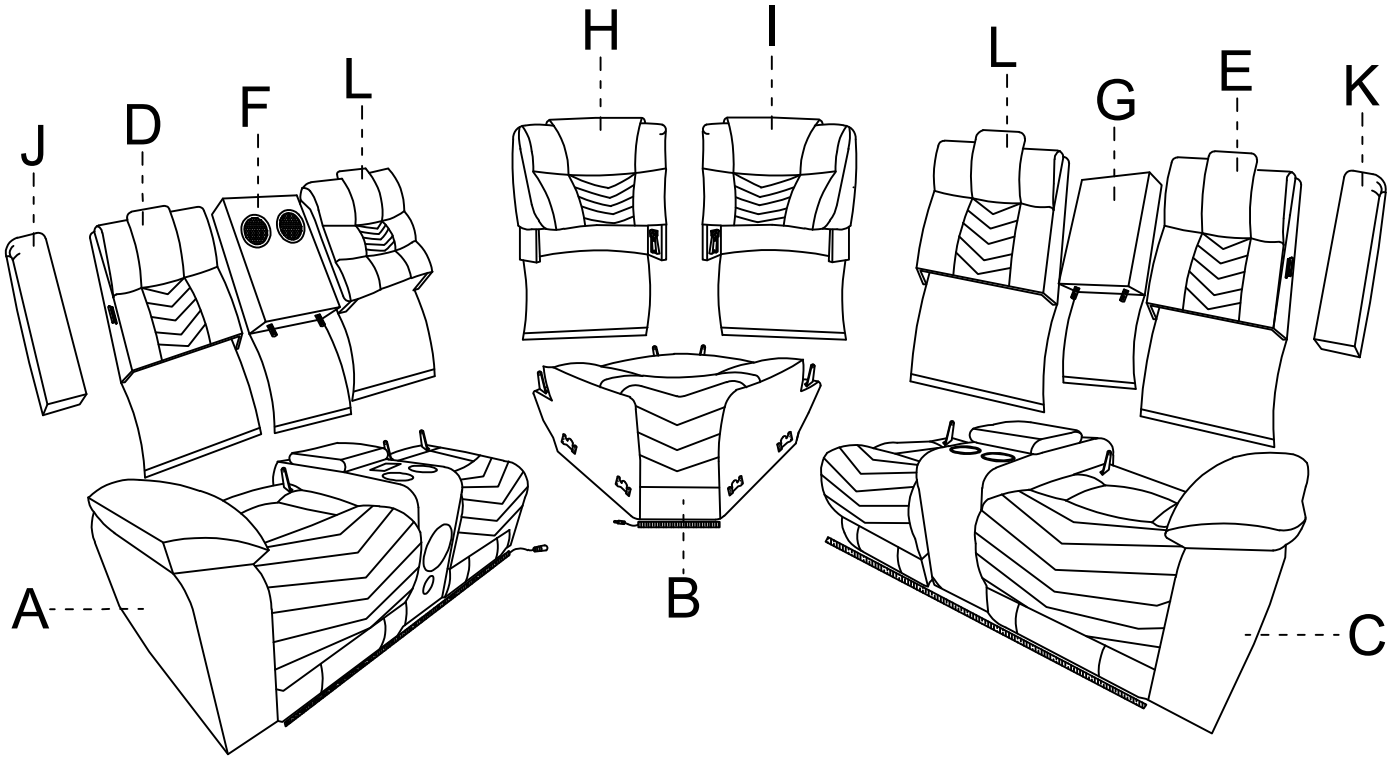

PARTS LIST:

A

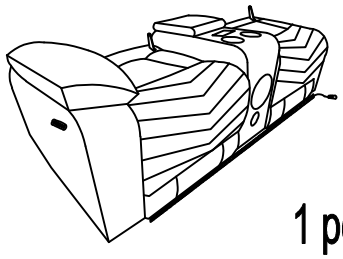

1 pc

B

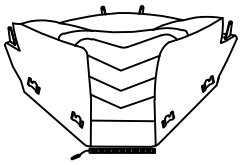

1 pc

C

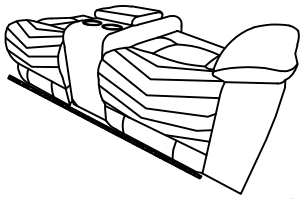

1 pc

D

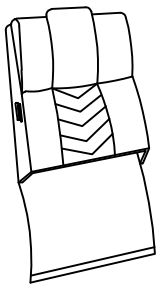

1 pc

E

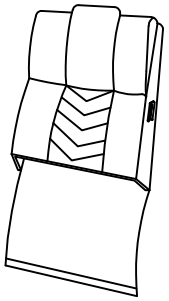

1 pc

F

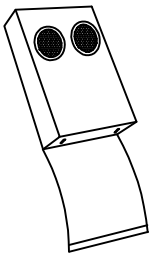

1 pc

G

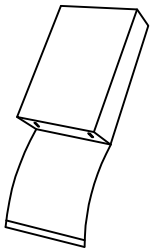

1 pc

H

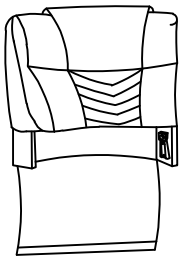

1 pc

I

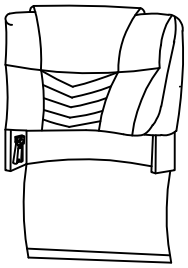

1 pc

J



1 pc

K

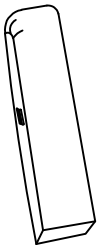

1 pc

L

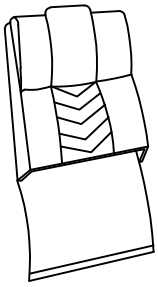

2 pcs

HARDWARE LIST:

M

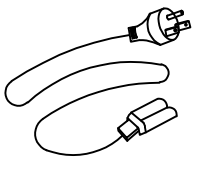

1 pc

N

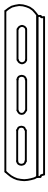

4 pcs

Step 1,

Please check the bottom of seat "A" & "C",
Open the zipper and take out the backrest "F", "G" and part "N".

Bottom of "A"

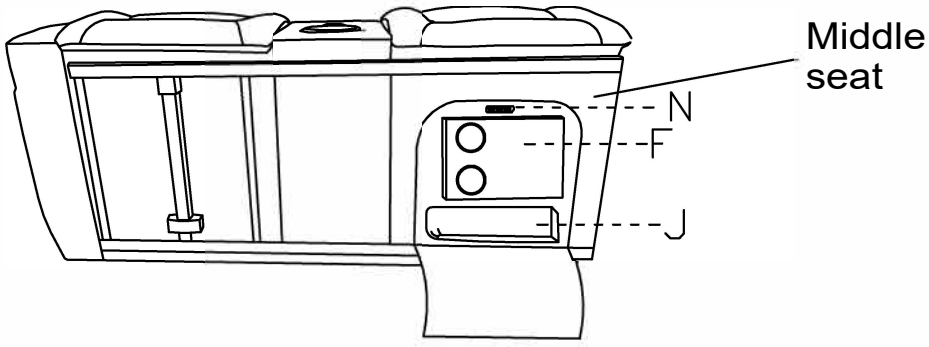

Bottom of "C"

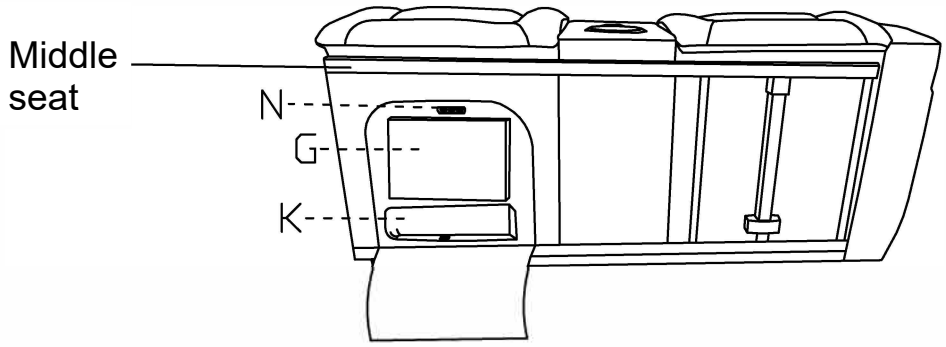

Step 2,

Insert the part "N" to bottom of the backrest "F" "G"

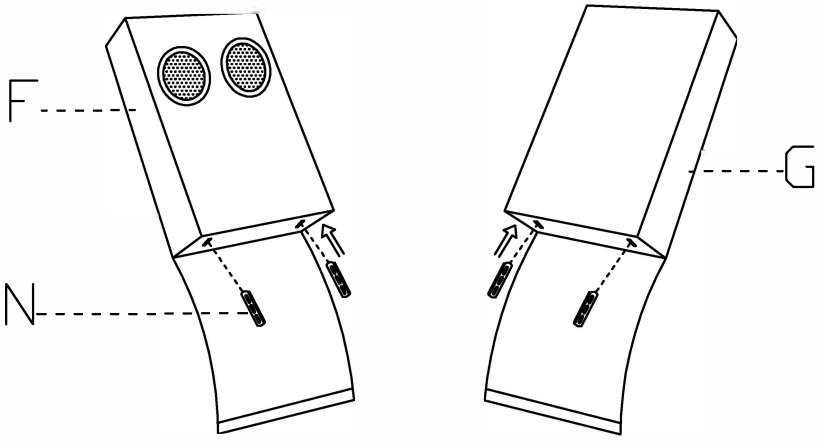

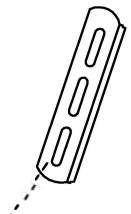

The flat side is facing inwards,

Step 3,

The left facing loveseat "A".
Insert the backrest "D", "L", & "F".

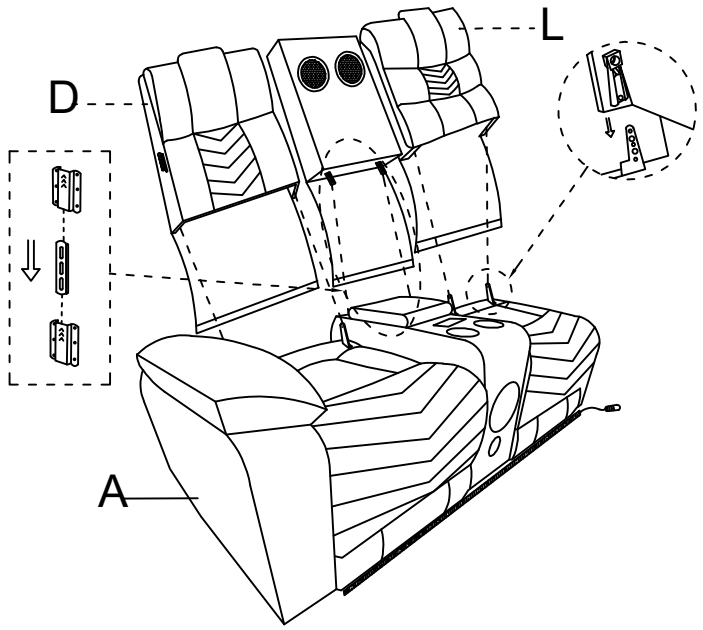

Step 4,

Insert the wing "J"

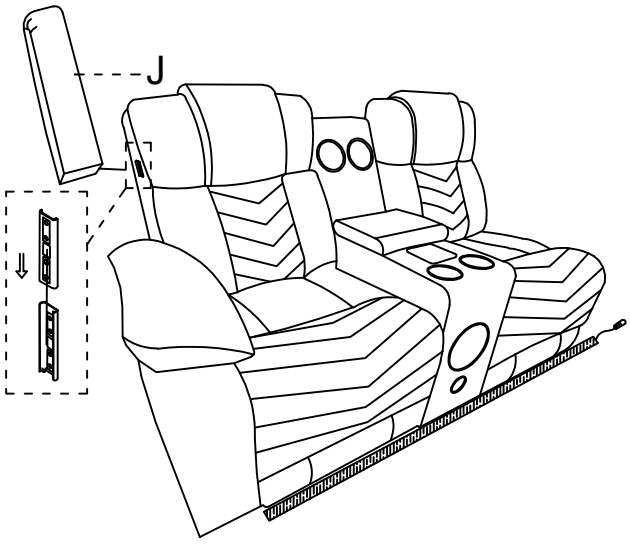

Step 5,

Connect the sofa and corner seat by bracket as below shown.

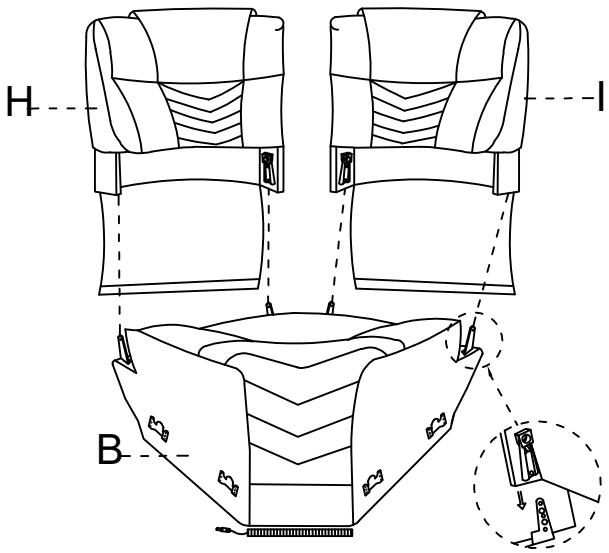

Step 6, The right facing loveseat "C". Insert the backrest "L", "E", & "G".

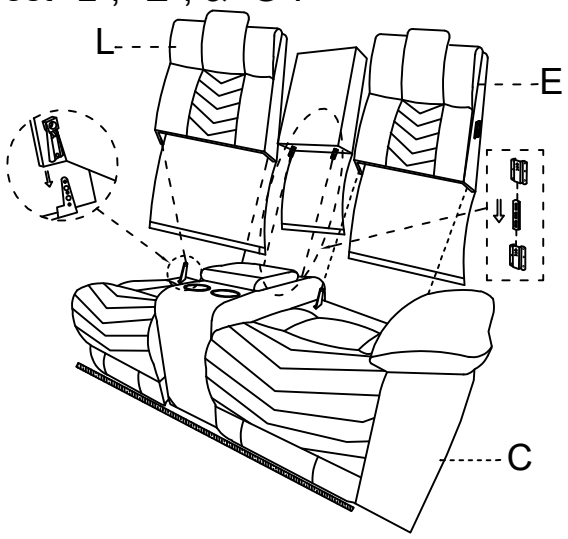

Step 7, Insert the wing "K"

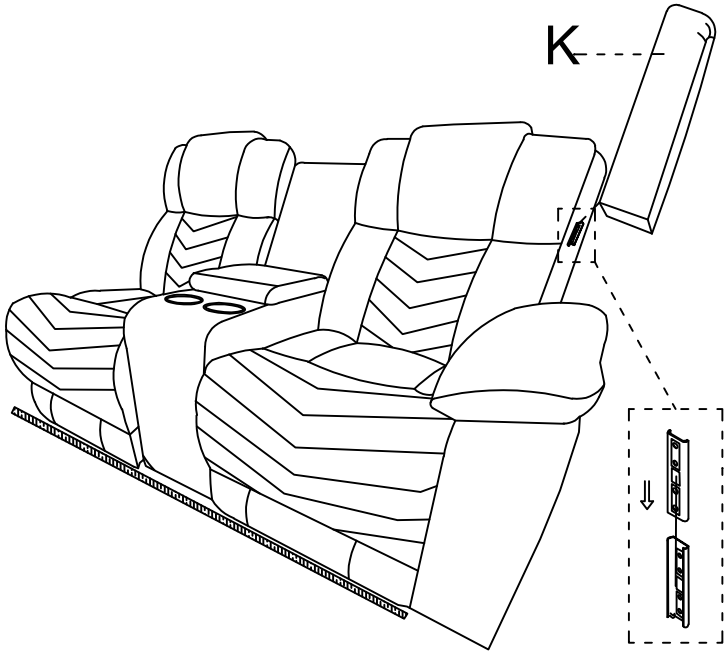

Connect the wire at the bottom of "A" & "B"

Step 8, Connect the sofa and corner seat by bracket as below shown.

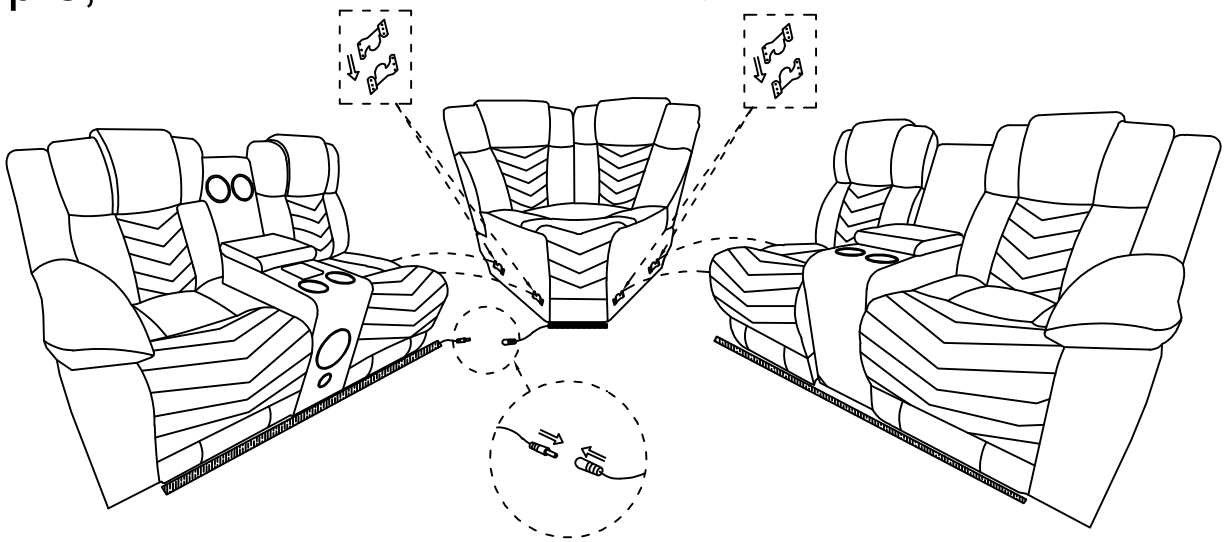

Connect the wire at the bottom of "A" & "B"

Step 9, Connect the wire at the bottom of "A" & "C"

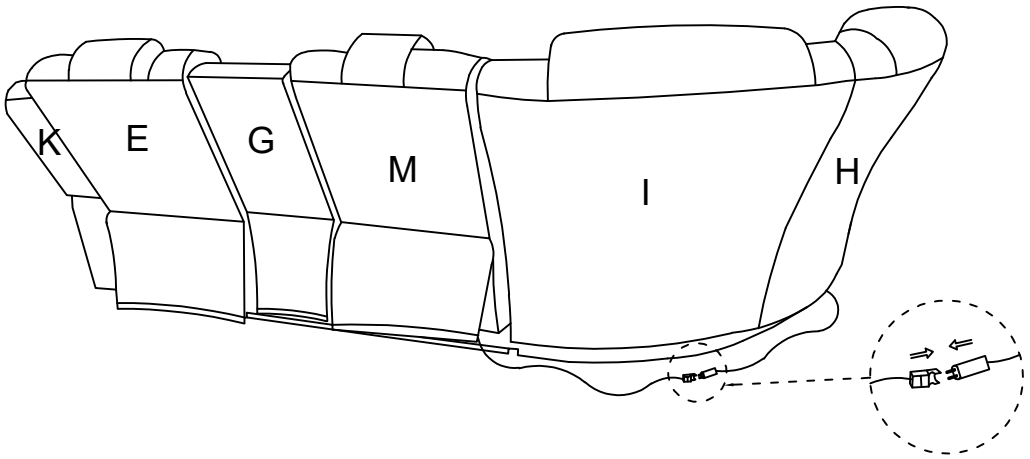

Step 10, Connect the wire "M" to back the seat "A", then plug in the power socket.

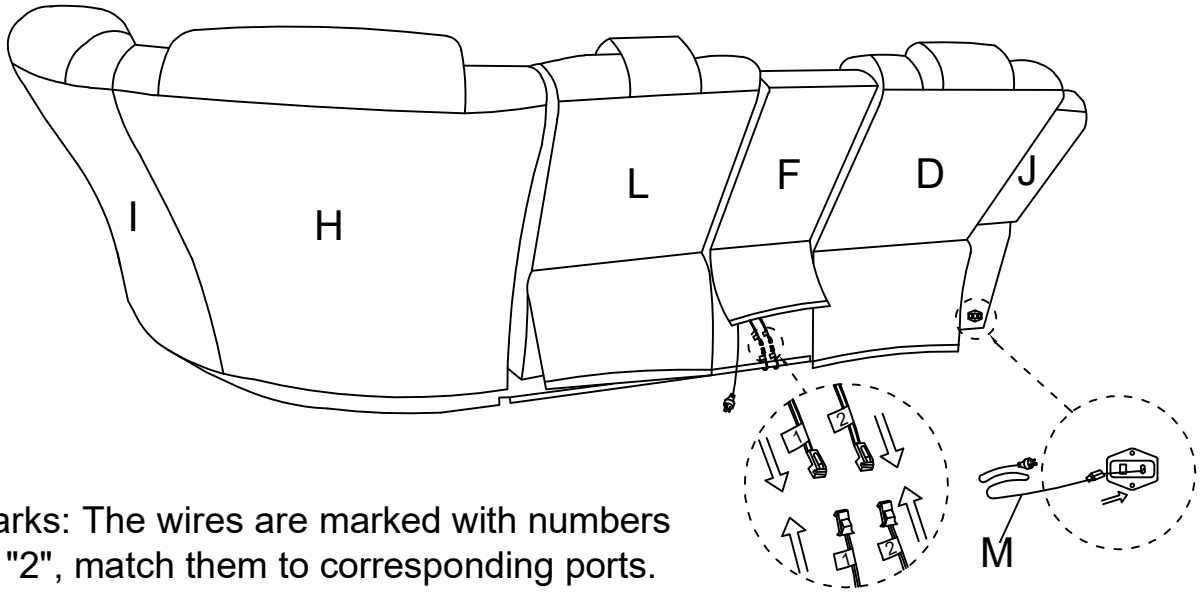

Remarks: The wires are marked with numbers "1" & "2", match them to corresponding ports.

Step 11, The assembly is completed

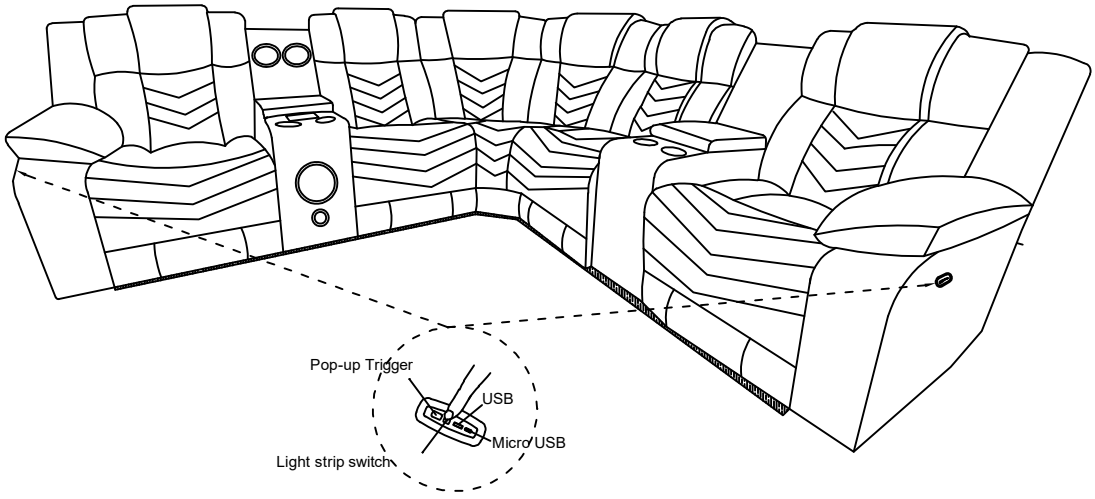

Please unplug all the wires and power cords first if you need to move the sofa.