KOHLER GENUINE PARTS

Archer®

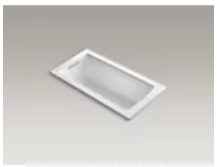

60" x 30" drop-in Heated BubbleMassage™ air bath
K-1947-GH-0

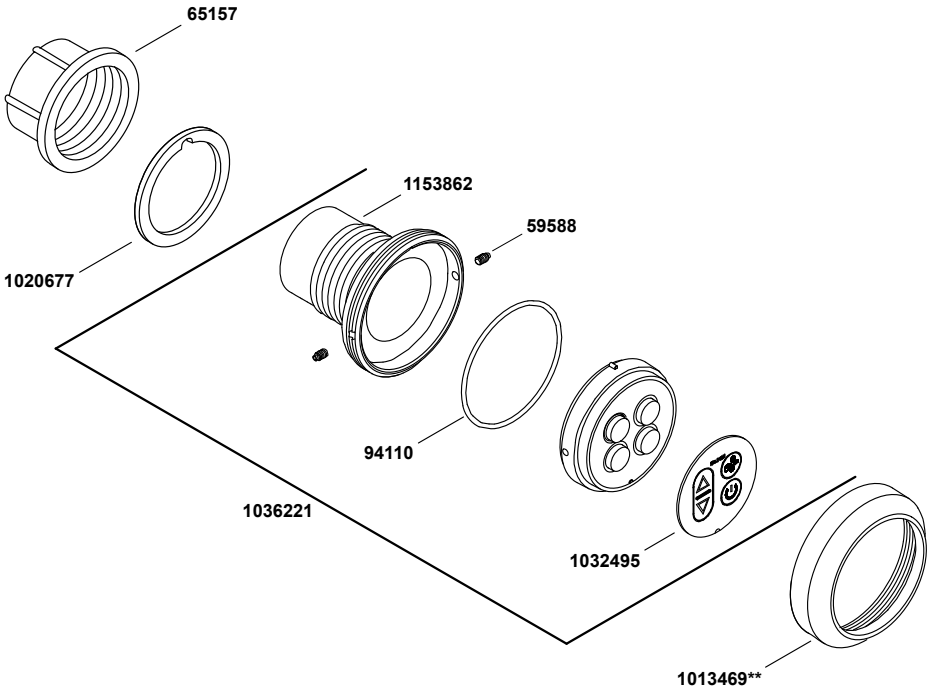

1038553-8-**E**

© 2015 Kohler Co.

KOHLER GENUINE PARTS

Archer®

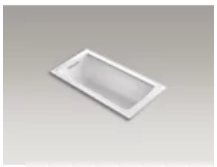

60" x 30" drop-in Heated BubbleMassage™ air bath
K-1947-GH-0

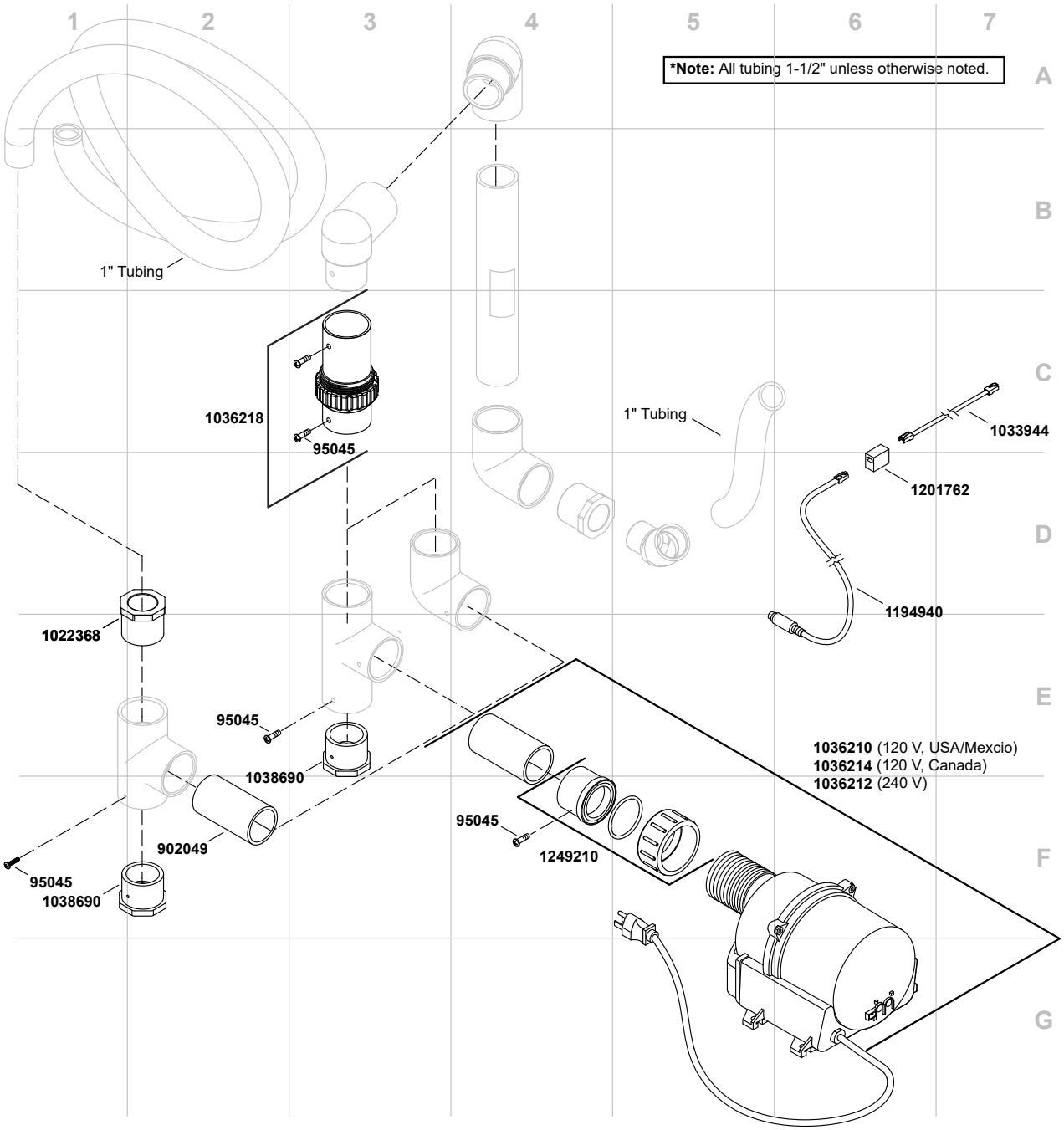

1055078-8-**F**

©2018 Kohler Co.

KOHLER GENUINE PARTS

Archer®

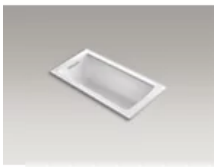

60" x 30" drop-in Heated BubbleMassage™ air bath
K-1947-GH-0

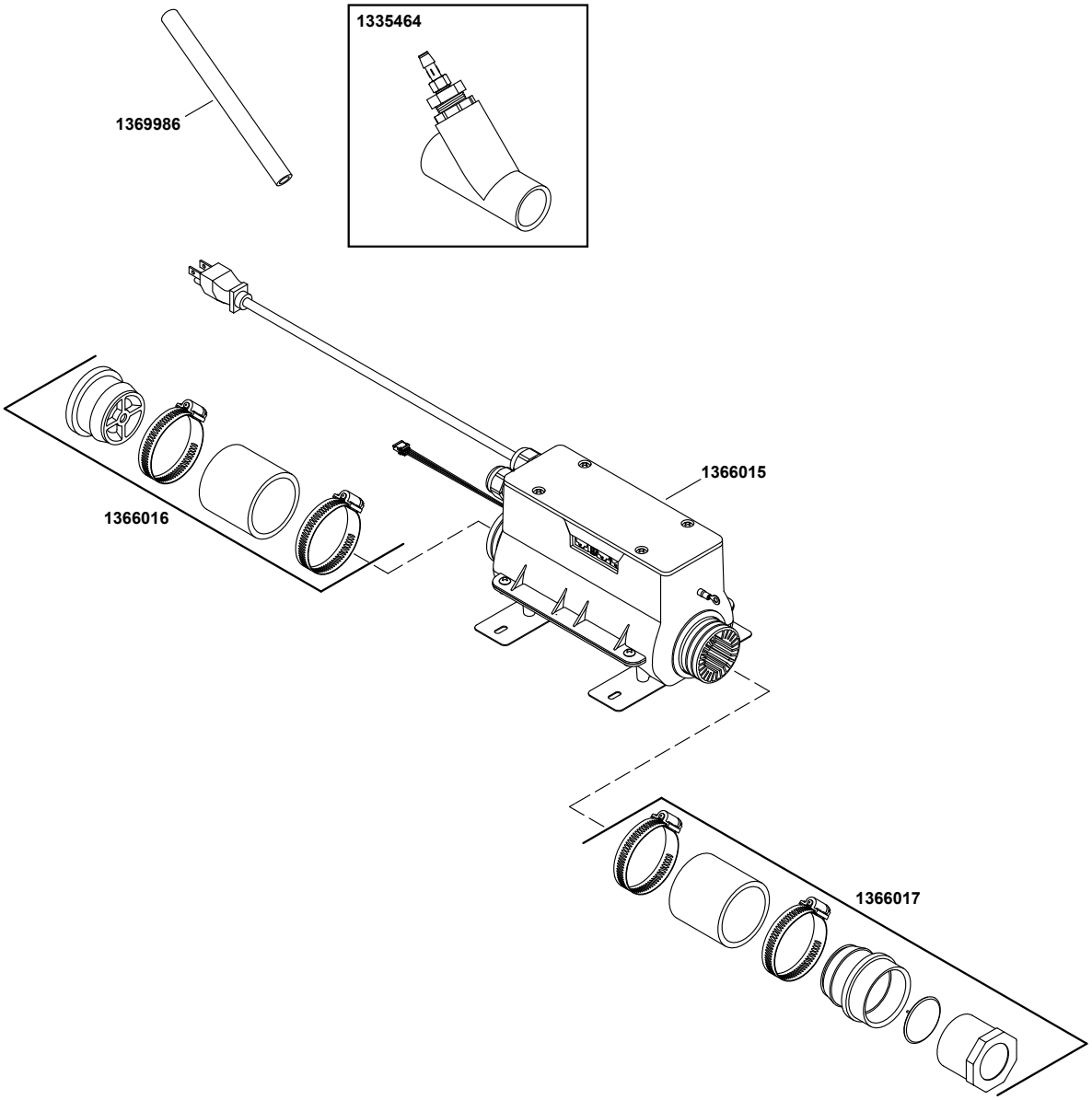

1365804-8-**A**

©2018 Kohler Co.