Metal Garden Shed

12x10FT

Assembly Instruction

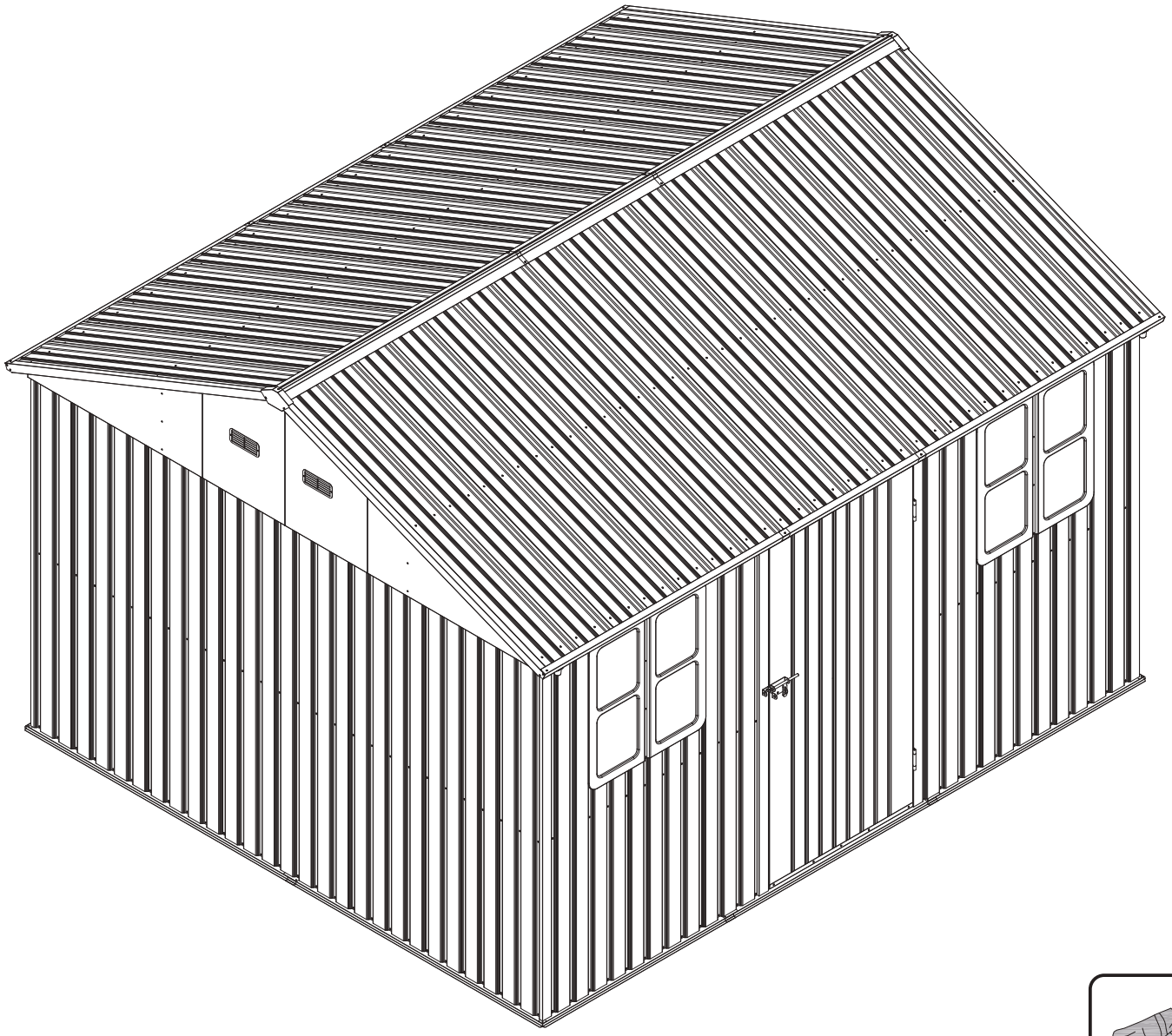



ASSEMBLY INSTRUCTIONS

WARNING

Please read the instruction manual carefully before assembly.
Please assembly strictly in accordance with the instrution.
Please double-check to ensure that all parts of the package contents intact.
To avoid injury, work gloves are recommended during assembly.

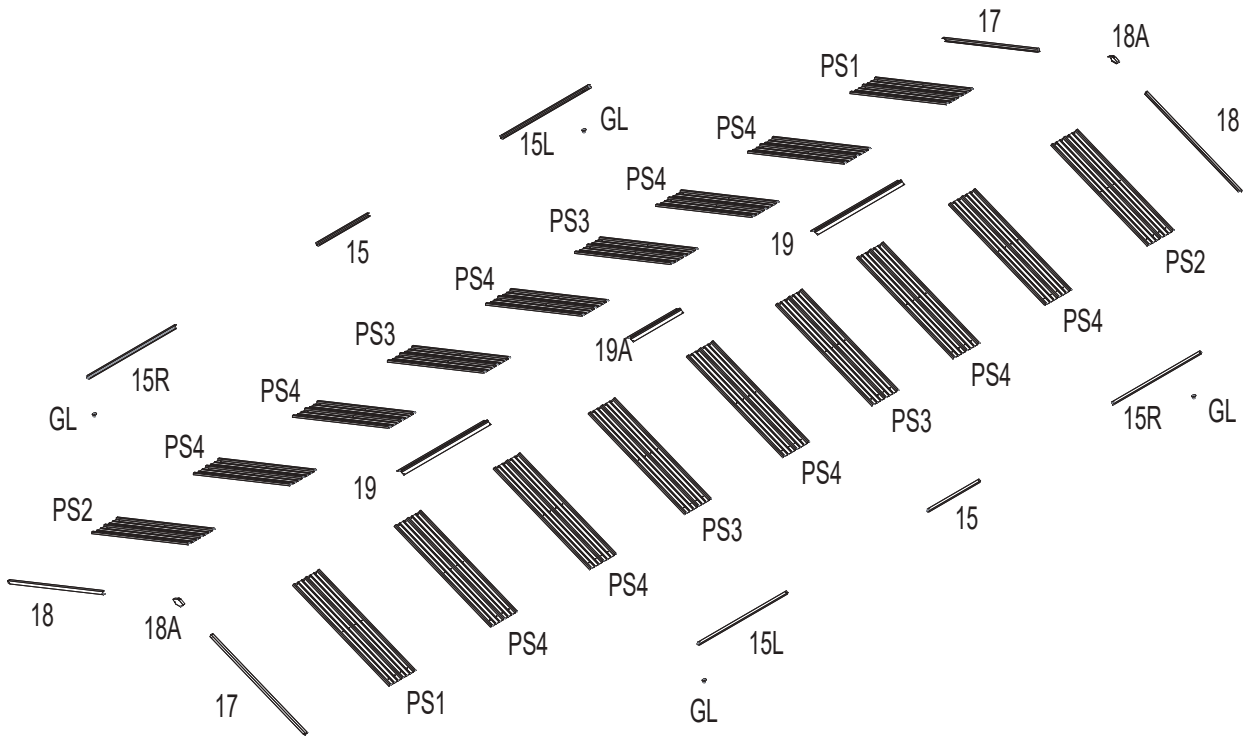
17
18A
PS1
18
GL
15L
PS4
PS4
PS3
19
15
PS2
PS4
PS4
PS3
19A
PS4
15R
PS4
GL
PS3
15R
GL
PS4
19
PS4
PS2
PS3
15
PS4
18
18A
PS4
15L
17
PS1
GL

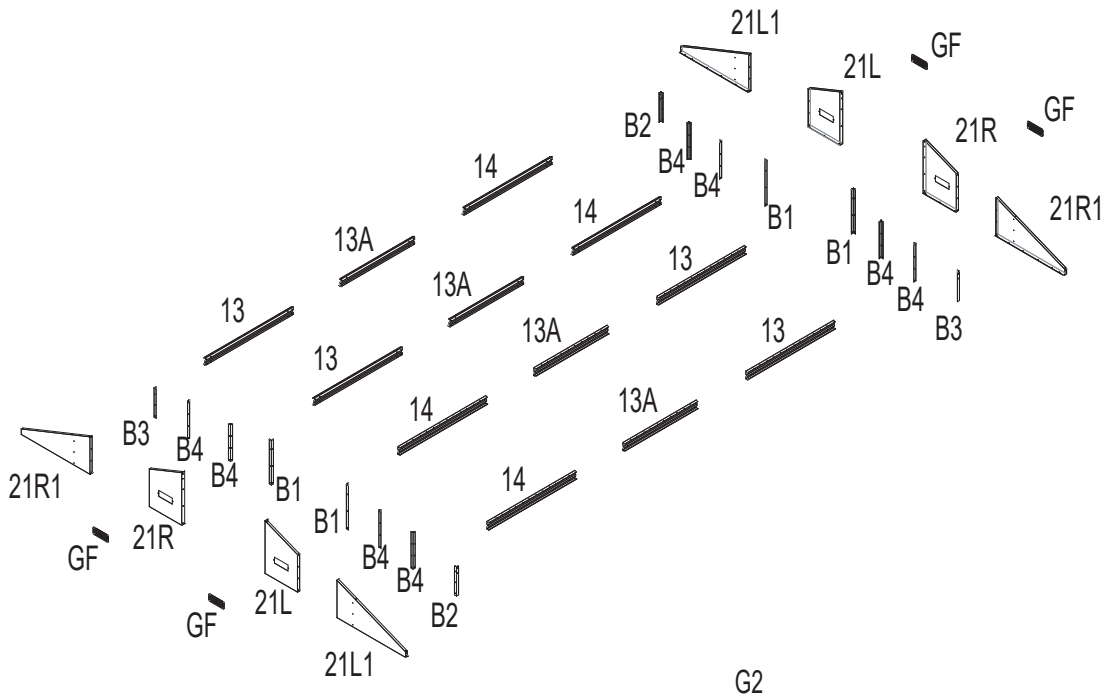
21L1
GF
21L
B2
GF
21R
B4
B4
14
14
B1
21R1
13A
B1
13
B4
13A
B4
13
B3
13A
13
13
14
13A
B3
B4
B4
B1
21R1
14
B1
21R
GF
B4
B4
21L
B2
GF
21L1

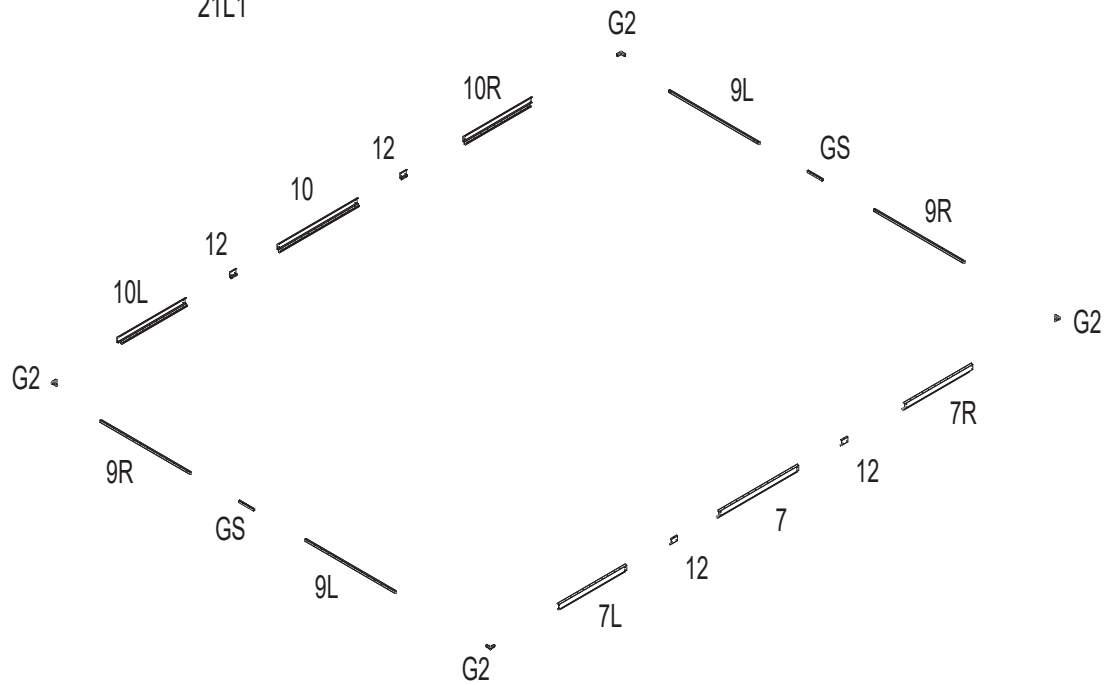
G2
10R
9L
12
GS
10
9R
12
10L
G2
G2
7R
9R
12
GS
7
12
9L
7L
G2

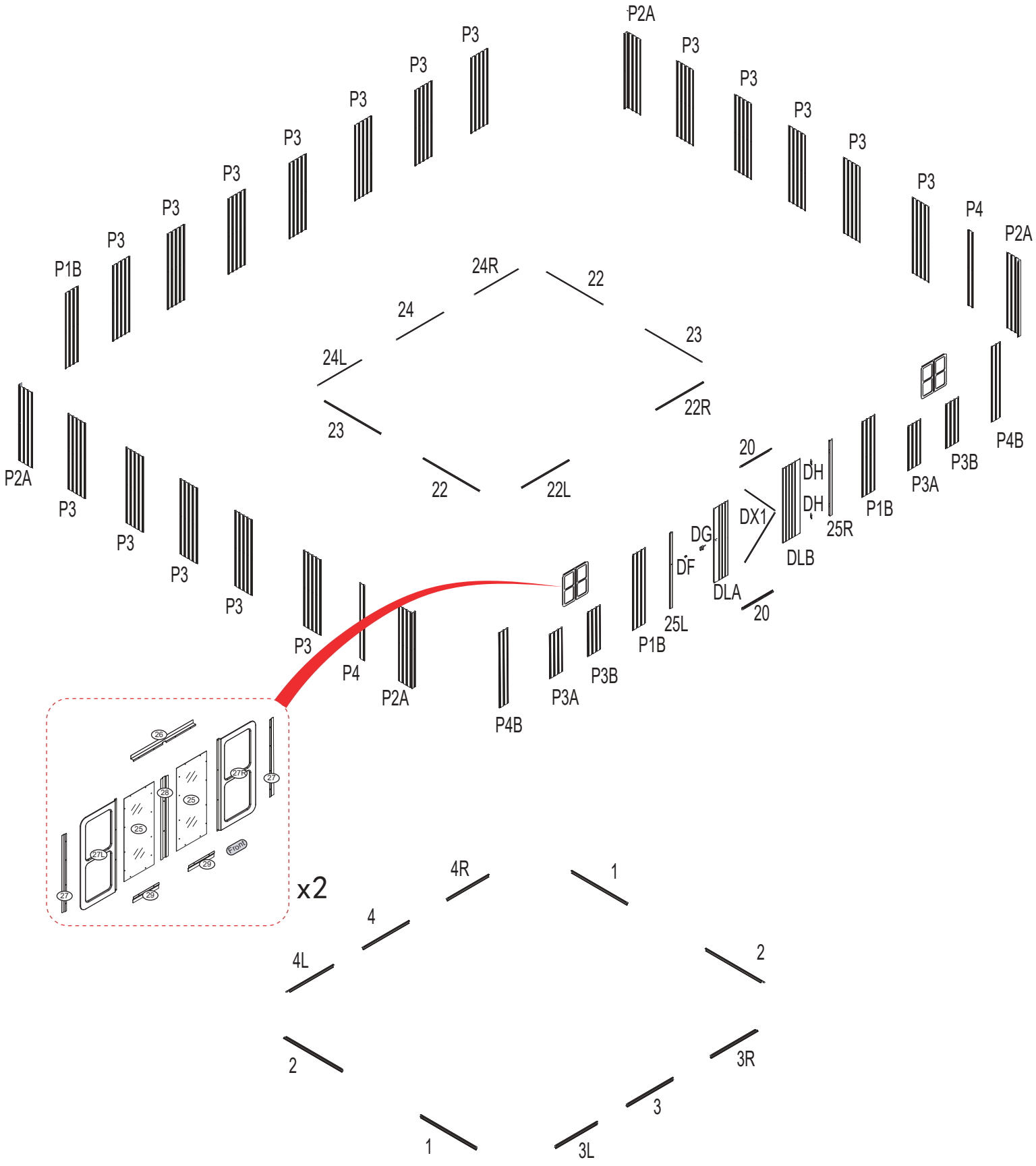
P2A
P3
P3
P3
P3
P3
P3
P3
P3
P3
P3
P3
P3
P3
P3
P3
P3
P3
P4
P2A
P1B
24R
22
24
23
24L
22R
23
20
DH
DH
P4B
P3B
P3A
P1B
25R
DX1
DG
DLB
DF
DLA
20
25L
P1B
P3B
P3A
P4B
P2A
P4
P3
P3
P3
P3
P3
P2A
P3
22
22L
26
27R
27
28
25
25
27L
Front
29
27
29
x2
4R
1
4
4L
2
2
3R
3
1
3L

PARTS LIST 1/3

NO.	PART	Qty.
DLA		1
DLB		1
21L	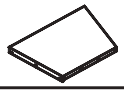	2
21R	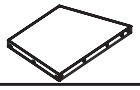	2
21L1		2
21R1		2
25		4
GF		4

NO.	PART	Qty.
P2A		4
P3		17
P4B		2
P1B		3
P4		2
25L		1
25R		1

PARTS LIST 2/3

NO.	PART	Qty.
PS1		2
PS2		2
PS3	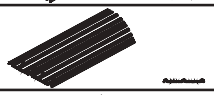	4
PS4		10
P3A		2
P3B		2
27L		2
27R		2
20		2

NO.	PART	Qty.
15		2
15L		2
15R		2
17		2
18		2
9L		2
9R		2
19A		1
19		2

PARTS LIST 3/3

NO.	PART	Qty.
1		2
2		2
3		1
3L		1
3R		1
4		1
4L		1
4R		1
7L		1
7R		1
7		1
26	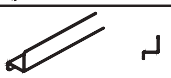	2
27		4
28		2
29		4
DX1		2
22		2
22L		1
22R		1
23		2
24		1
24L		1
24R		1
12		4
F6		4

NO.	PART	Qty.
10		1
10L		1
10R		1
GS		2
13A		4
13		4
14		4
B1		4
B2		2
B3		2
B4		8
18A		2
F1		717
F2	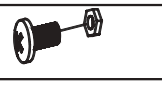	91
F3		16
F4		5
F5		2
S1		200
S2		710
DH		2
G2		4
GL		4
DG		1
DF		1

NO.	PART	Qty.
F1		20

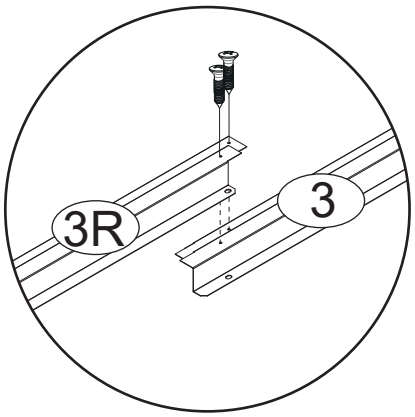

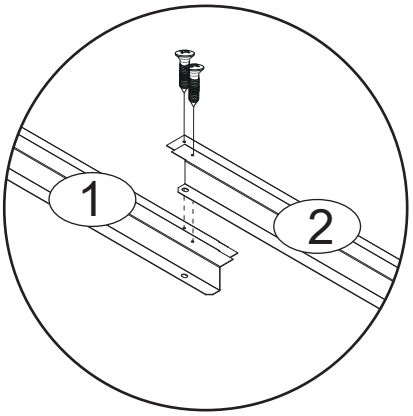

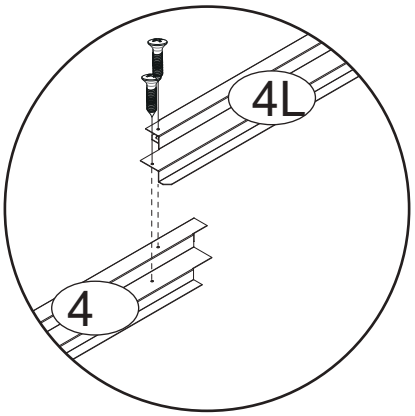

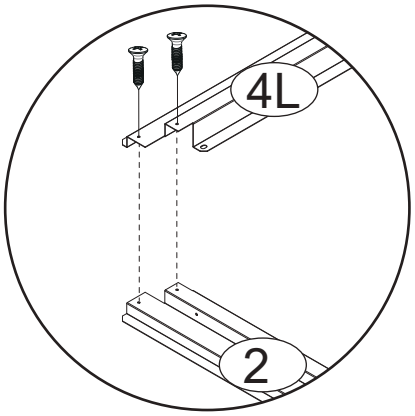

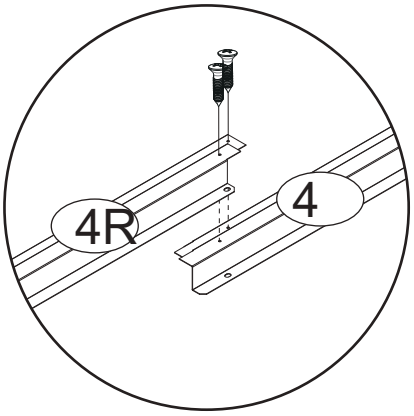

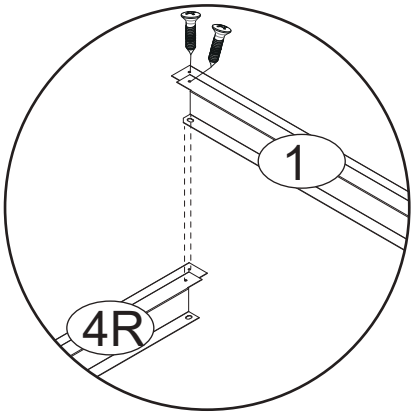

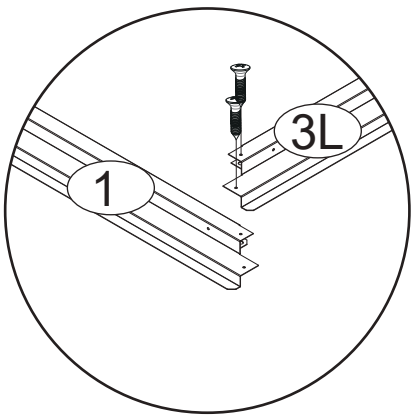

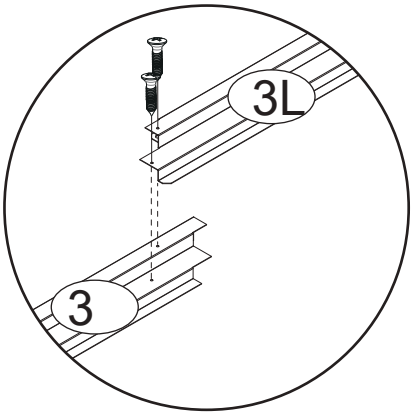

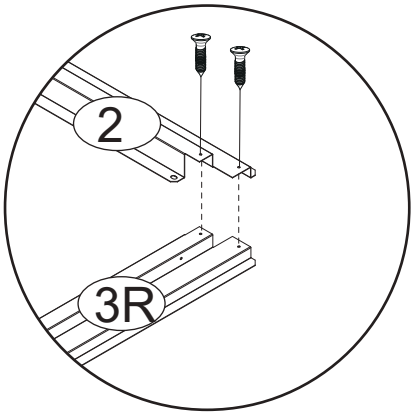

A=B

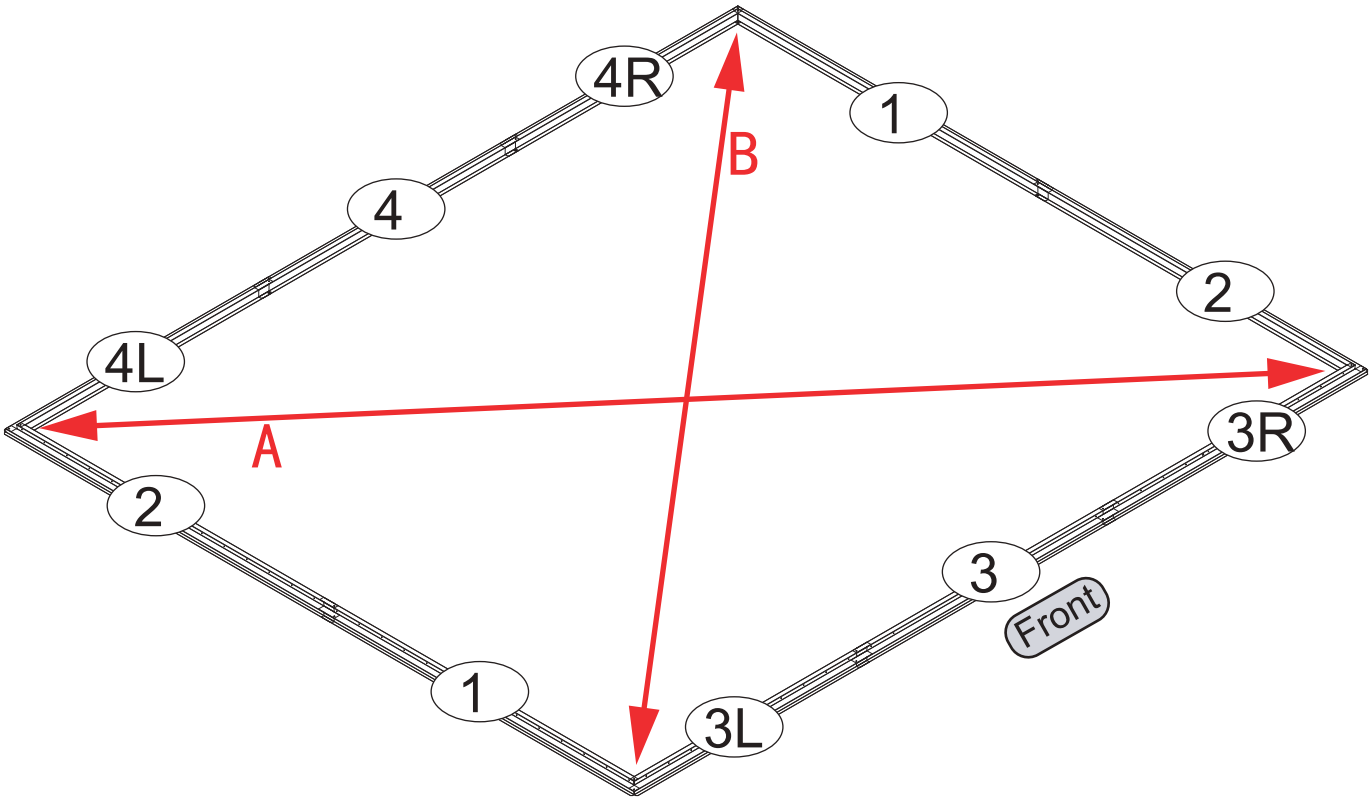

Attention! After the foundation is installed, use a tape measure to check the diagonal lines to ensure the angles are consistent.
This will prevent the foundation from being skewed, which could cause issues during later installations.

NO.	PART	Qty.
P2A		4
F1		12
S2		12

The installation page will start by reducing the size of the foundation and displaying the installation wall panels.
Later, the normal size will be adjusted

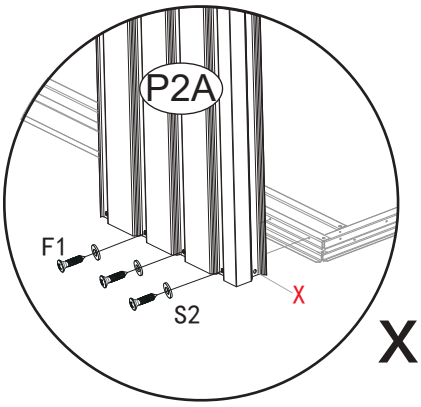

x4

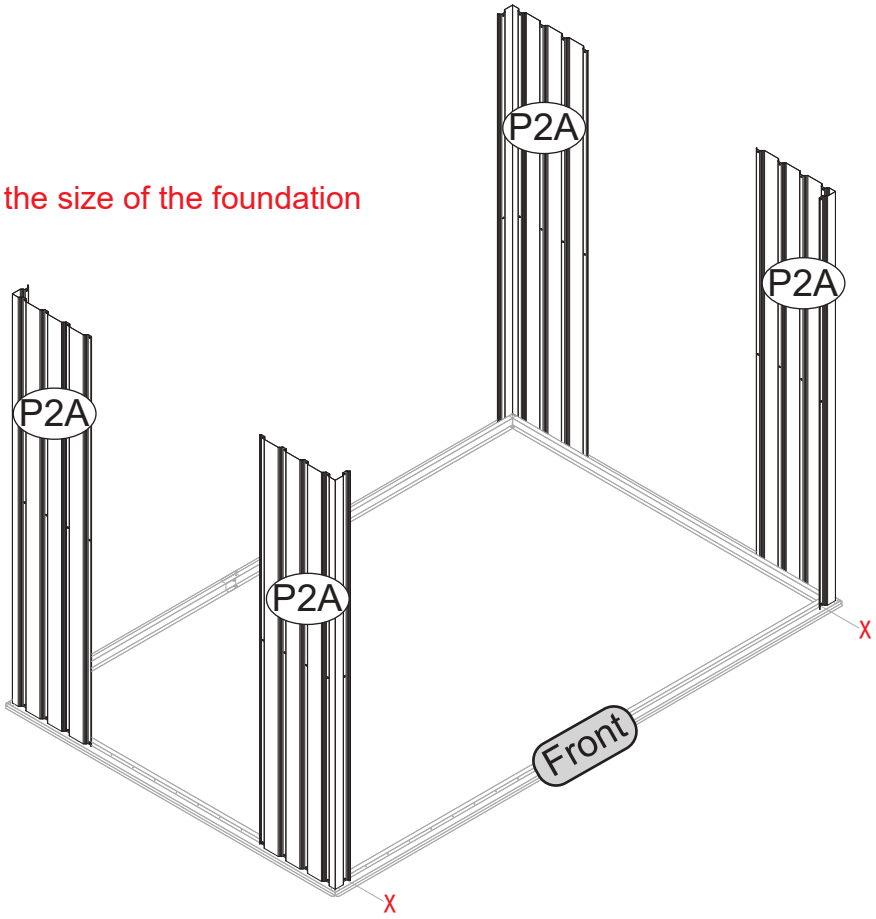

NO.	PART	Qty.
P1B		1
P3		1
F1		7
S2		7

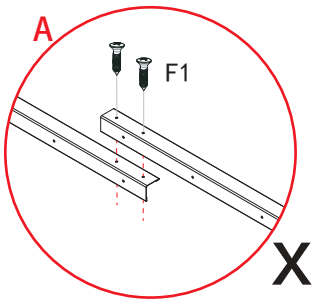

x4

During the installation process of the board,
do not install screws at the edge position

NO.	PART	Qty.
22		2
23		2
24		1
24L		1
24R		1
F1		29
S2		19

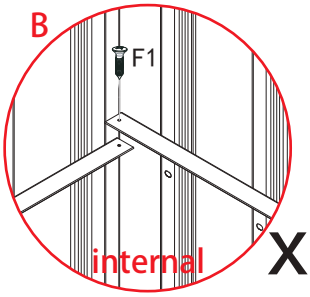

x2

Please prepare these boards,
Put them in order

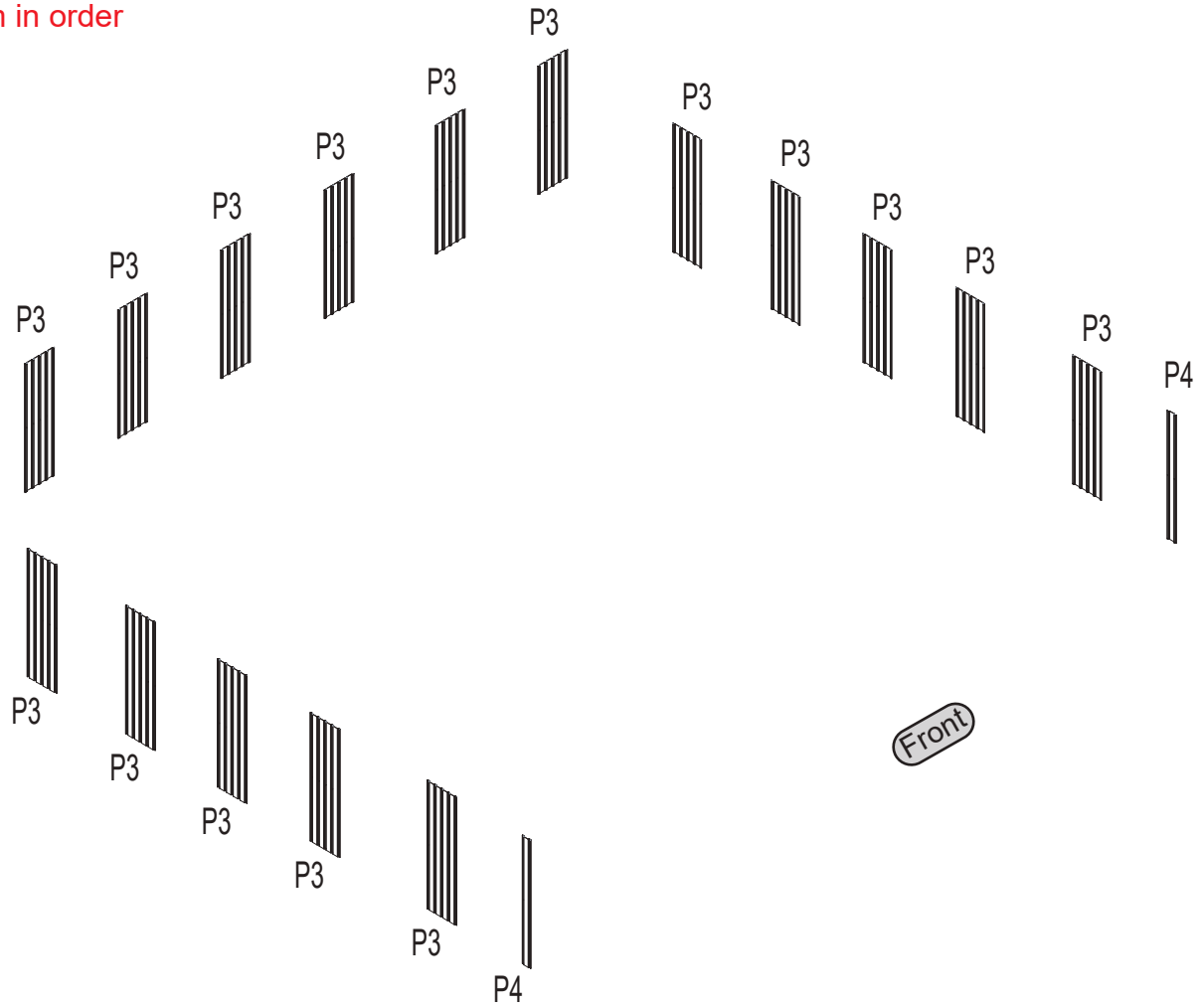

Install all screws

NO.	PART	Qty.
P3		16
P4		2
F1		138
S2		138

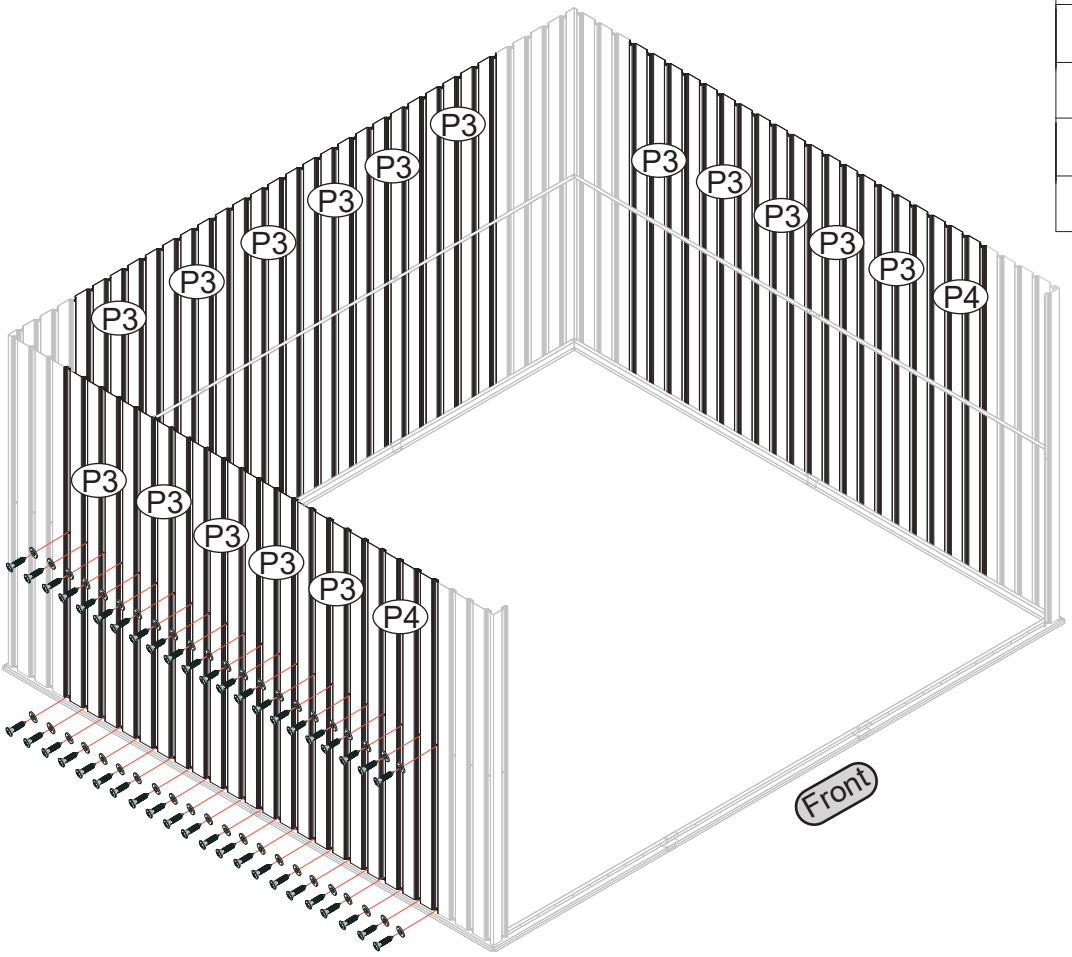

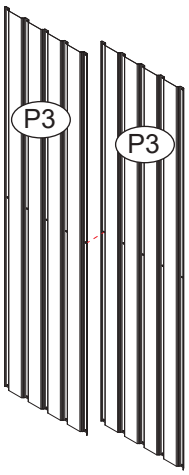

NO.	PART	Qty.
P4B		2
F1		4
S2		4

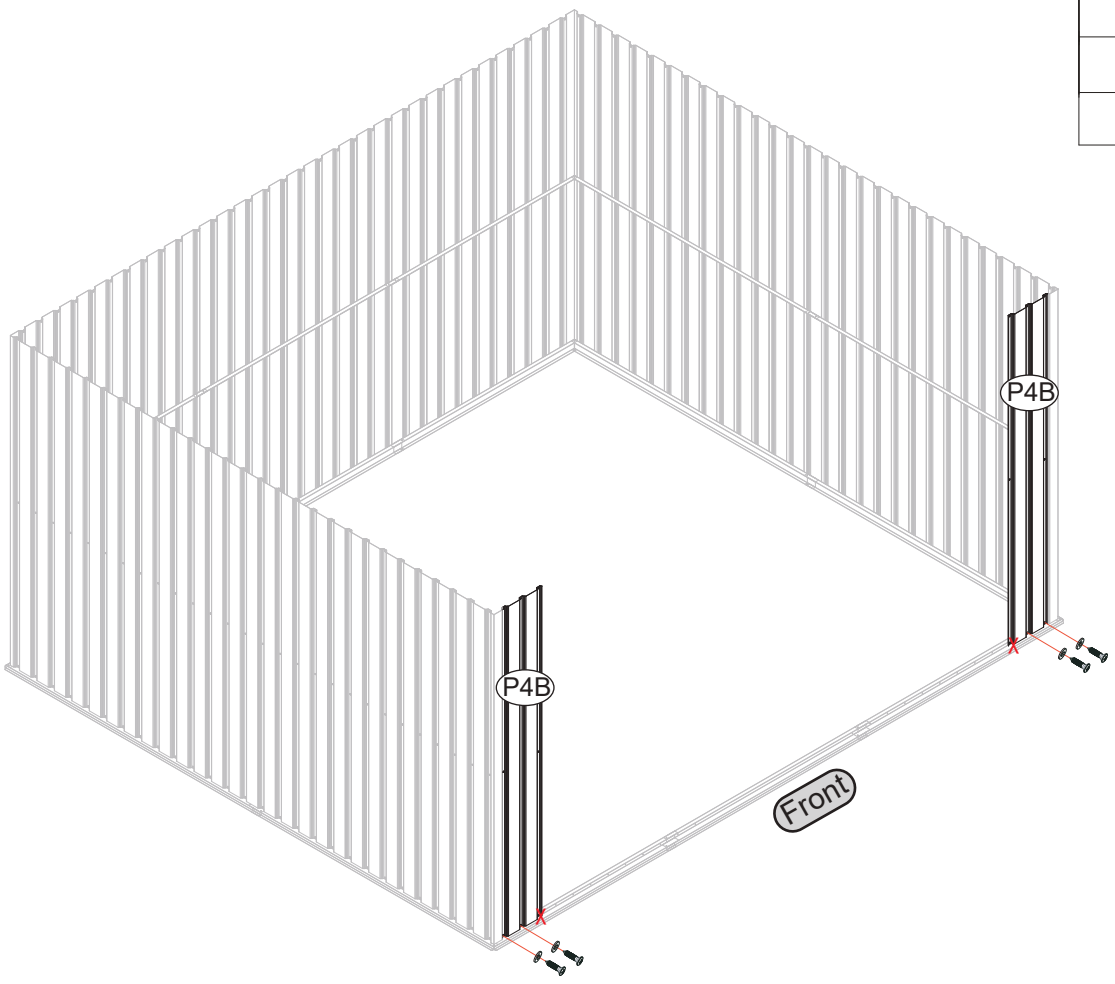

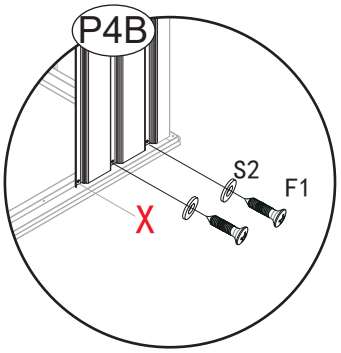

NO.	PART	Qty.
22L		1
22R		1
F1		6
S2		6

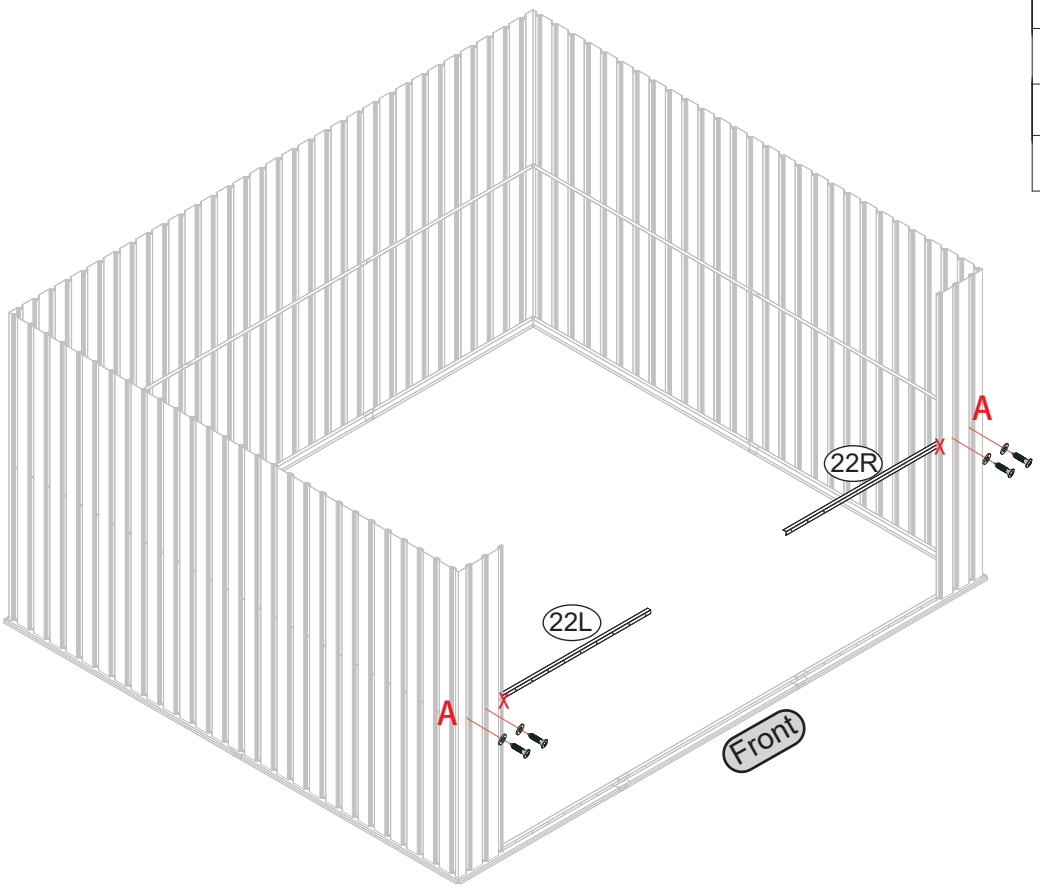

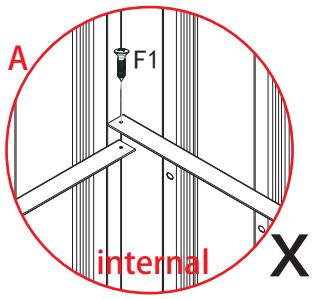

x2

Please prepare these boards,
Put them in order

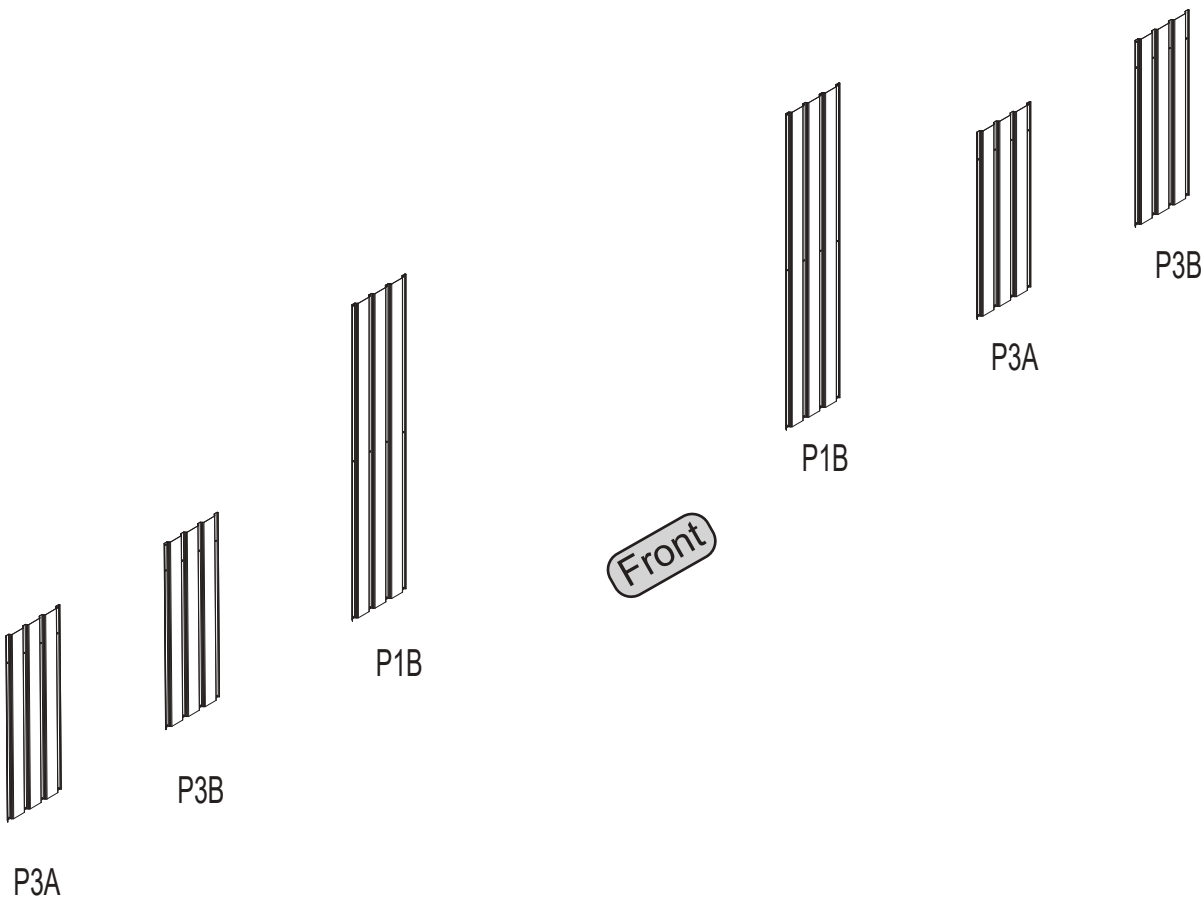

NO.	PART	Qty.
P3A		2
P3B		2
P1B		2
F1		36
S2		36

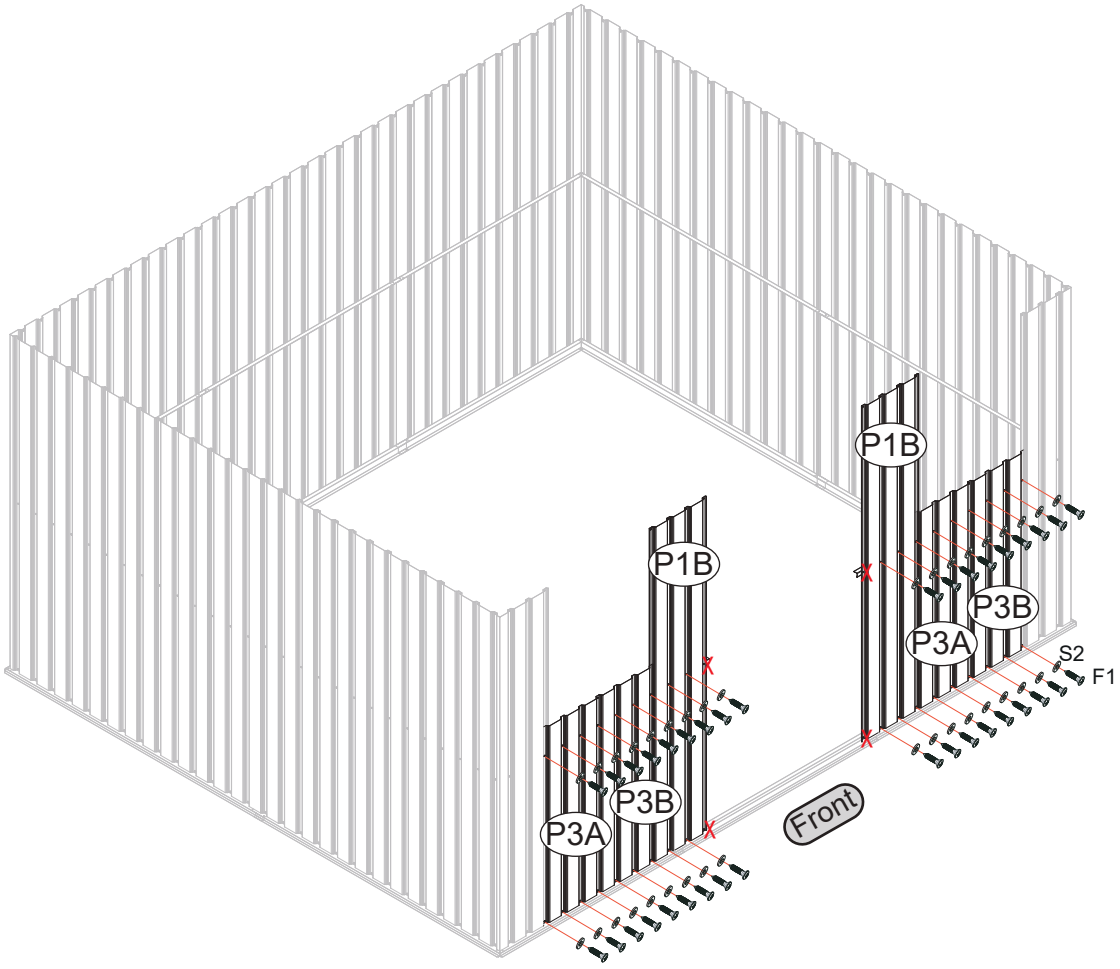

NO.	PART	Qty.
25L		1
25R		1
F1		6
S2		6

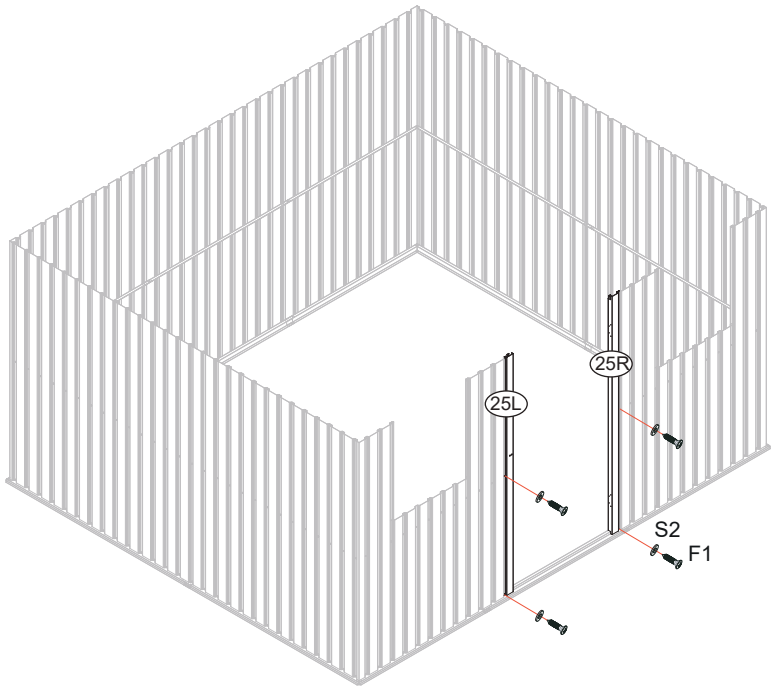

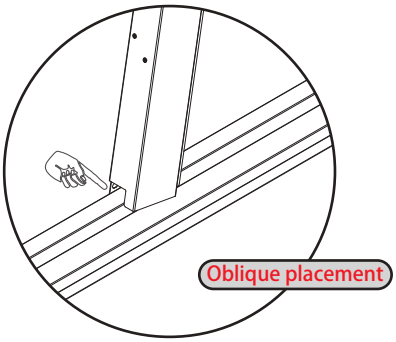

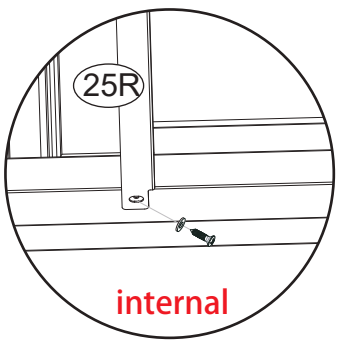



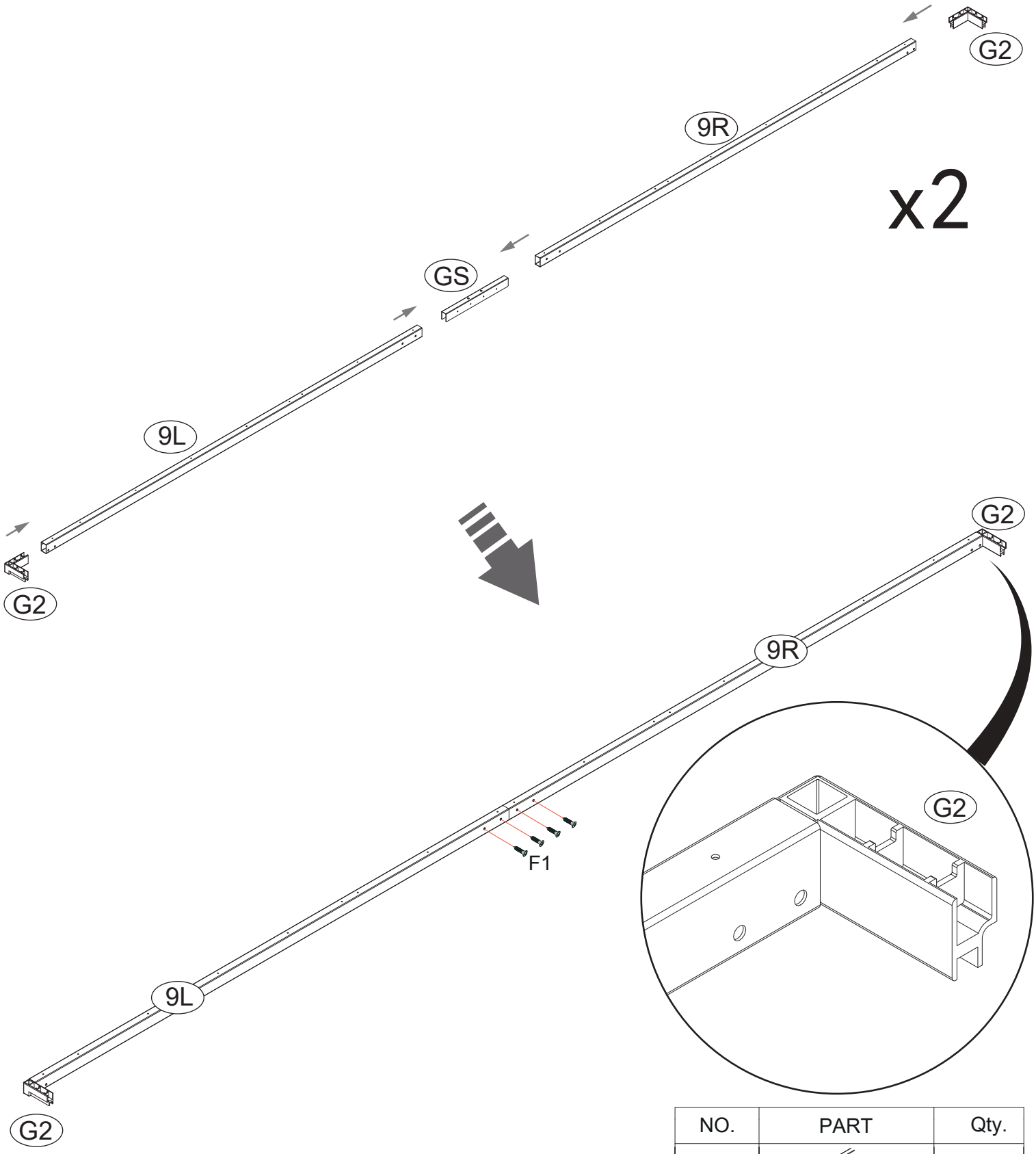

NO.	PART	Qty.
9L	▯	2
9R	▯	2
GS	⊓	2
G2		4
F1		8

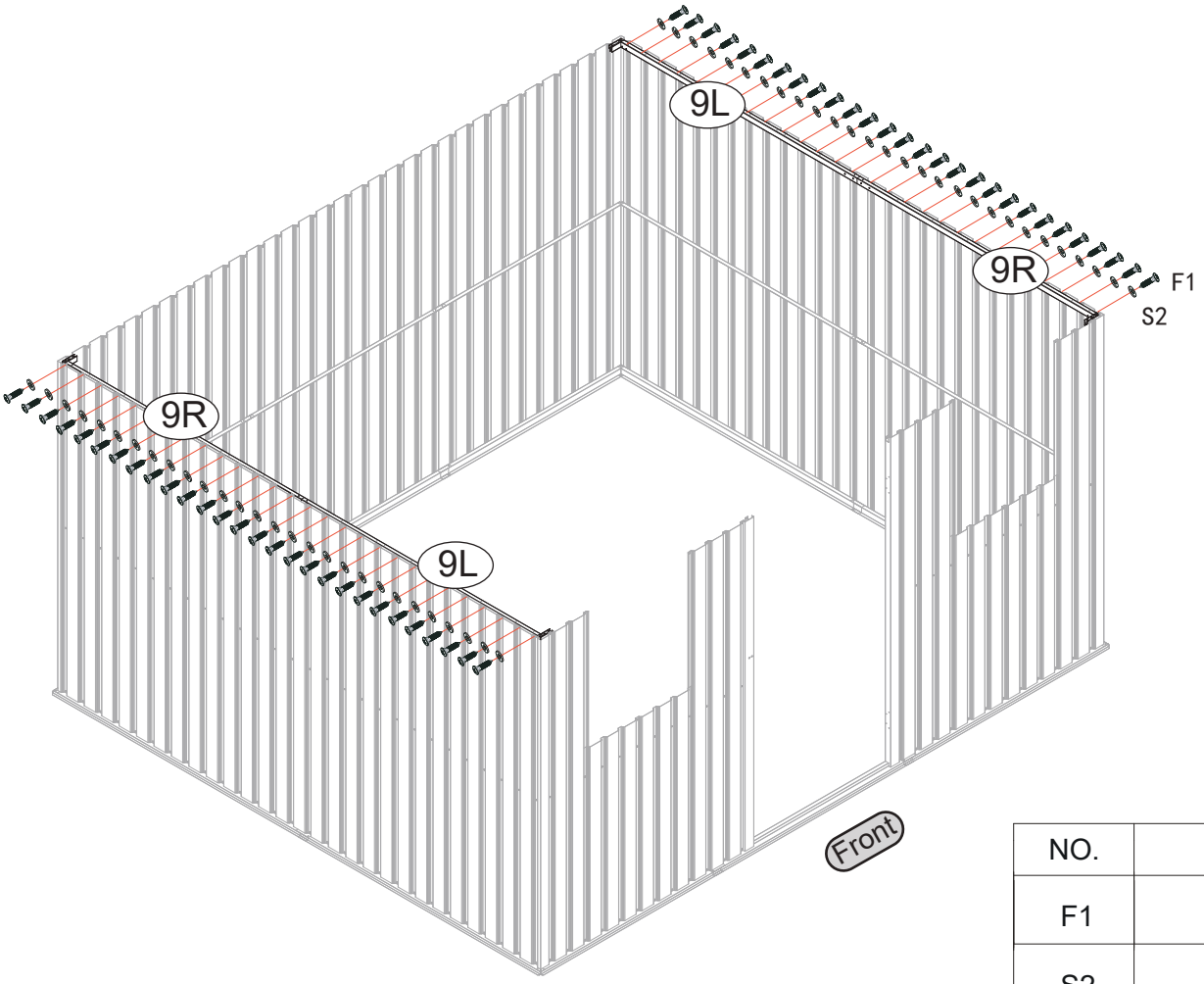

NO.	PART	Qty.
F1		56
S2		56

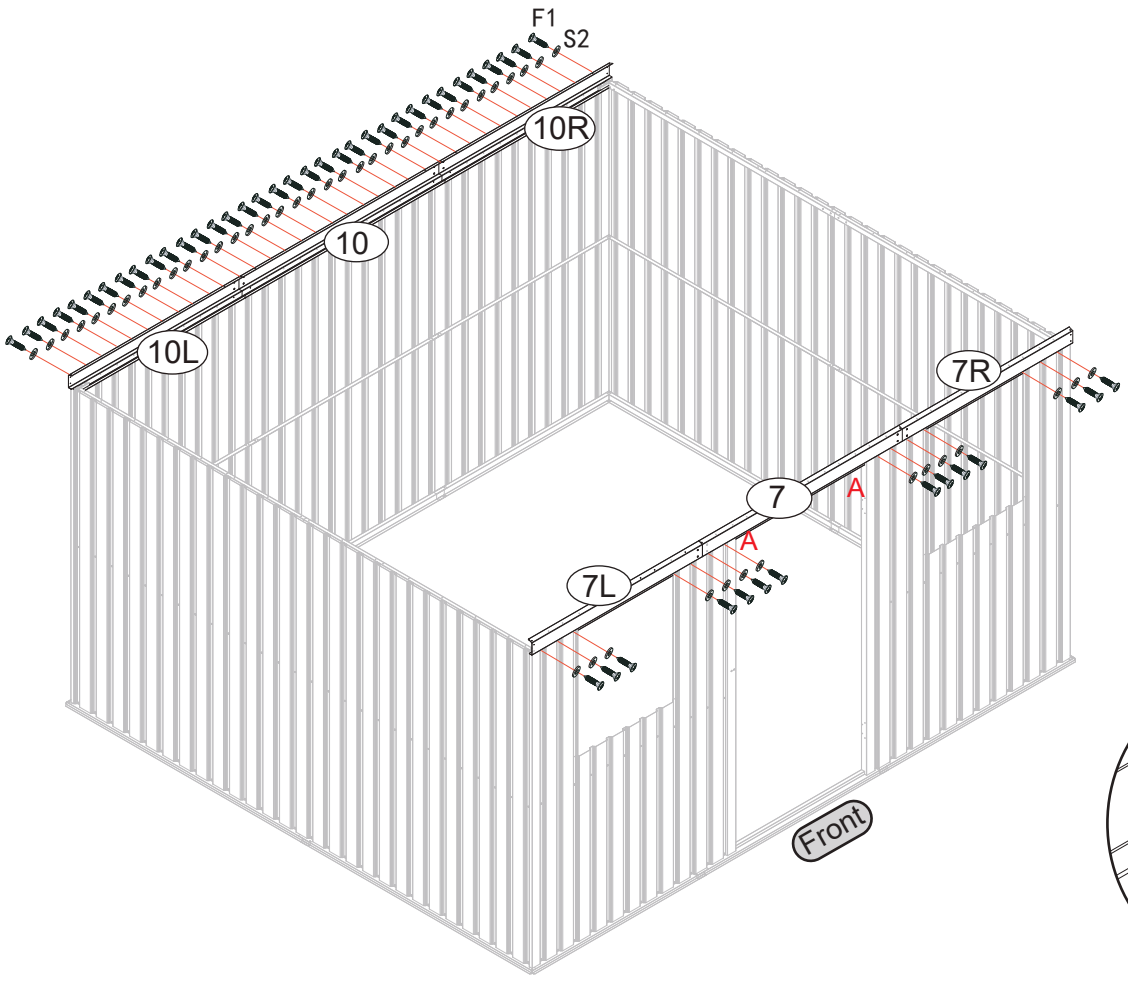

NO.	PART	Qty.
7		1
7L		1
7R	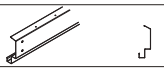	1
10	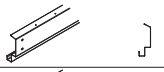	1
10L	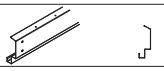	1
10R	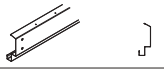	1
F1		48
S2		48

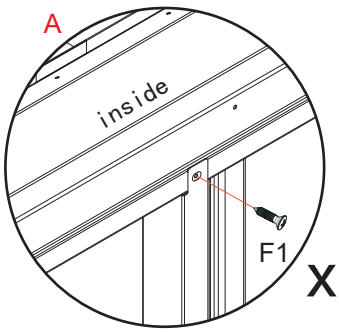

For detailed installation steps, please refer to the next page

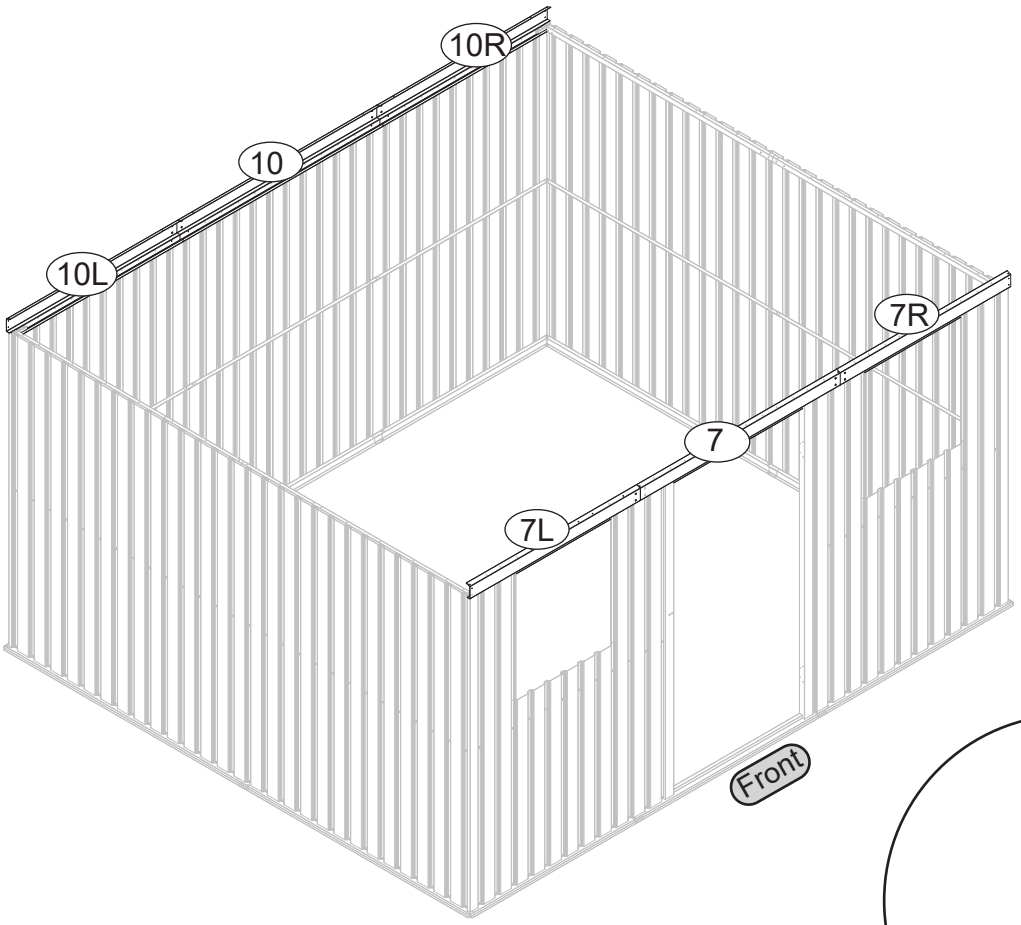

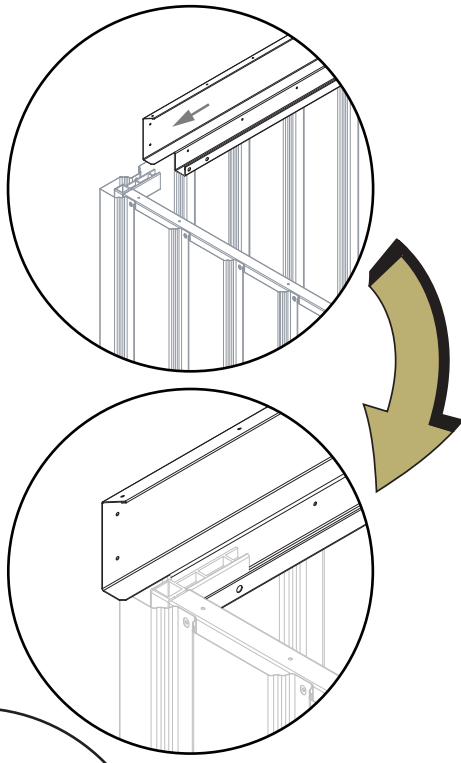

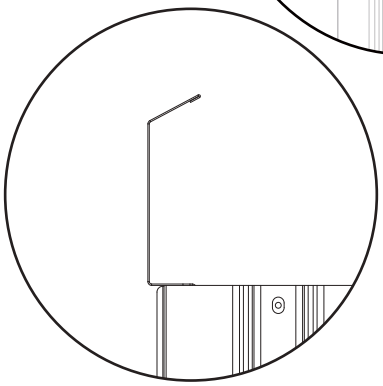

Insert four different products into G2 separately

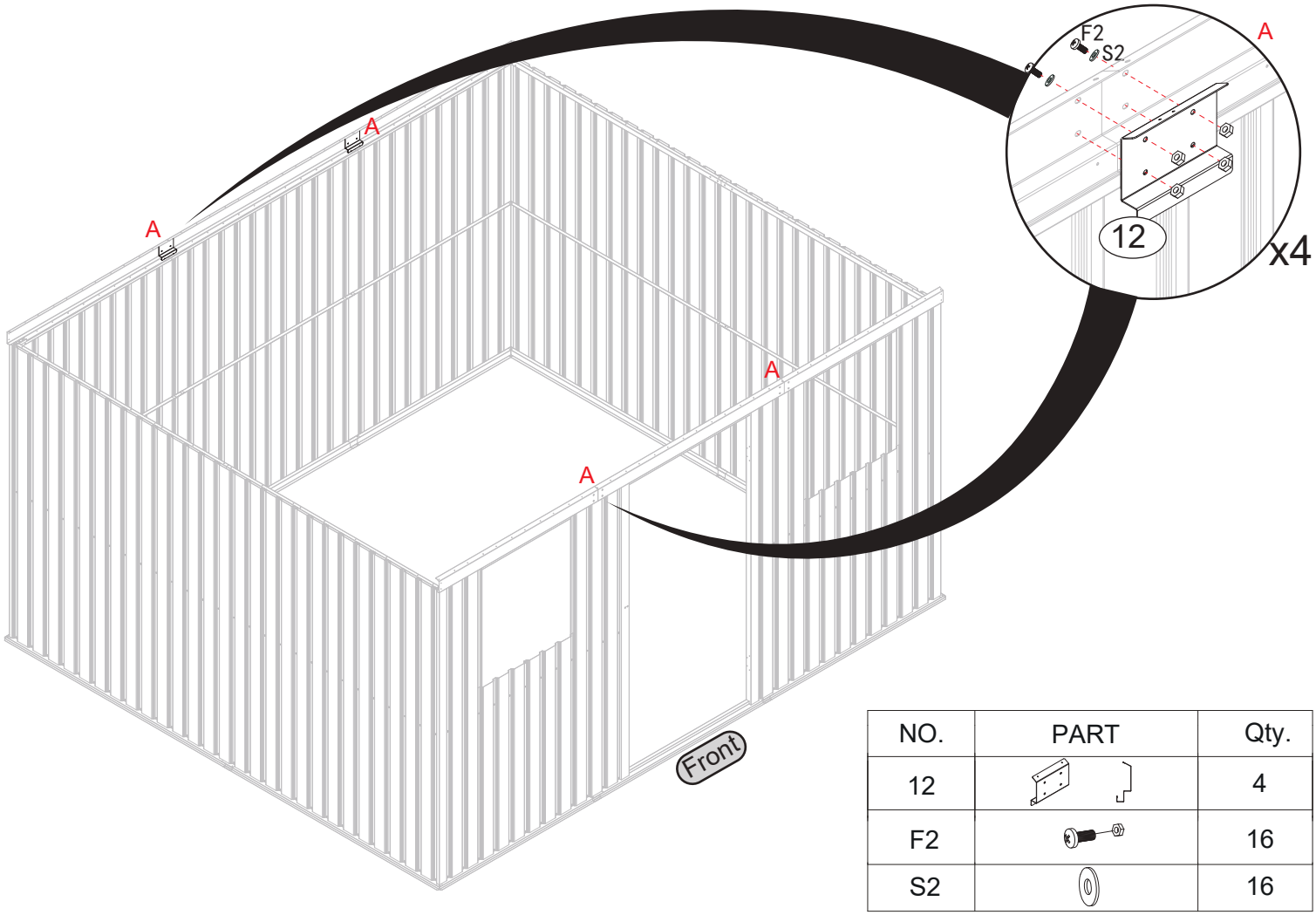

NO.	PART	Qty.
12		4
F2		16
S2		16

Before installing the window, peel off the film covering

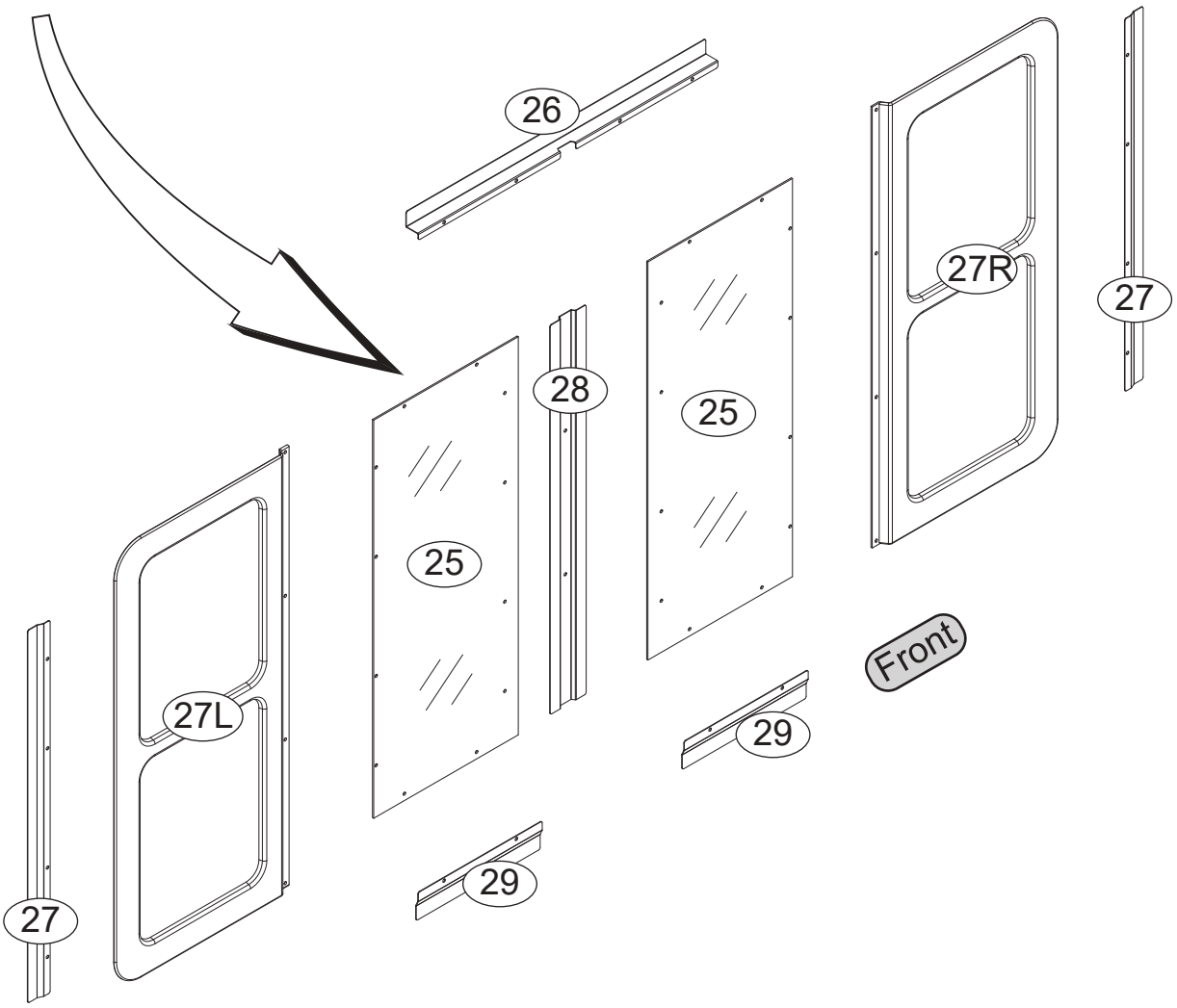

Do not install 26,27,29 in this one.

NO.	PART	Qty.
F2		2
F1		8

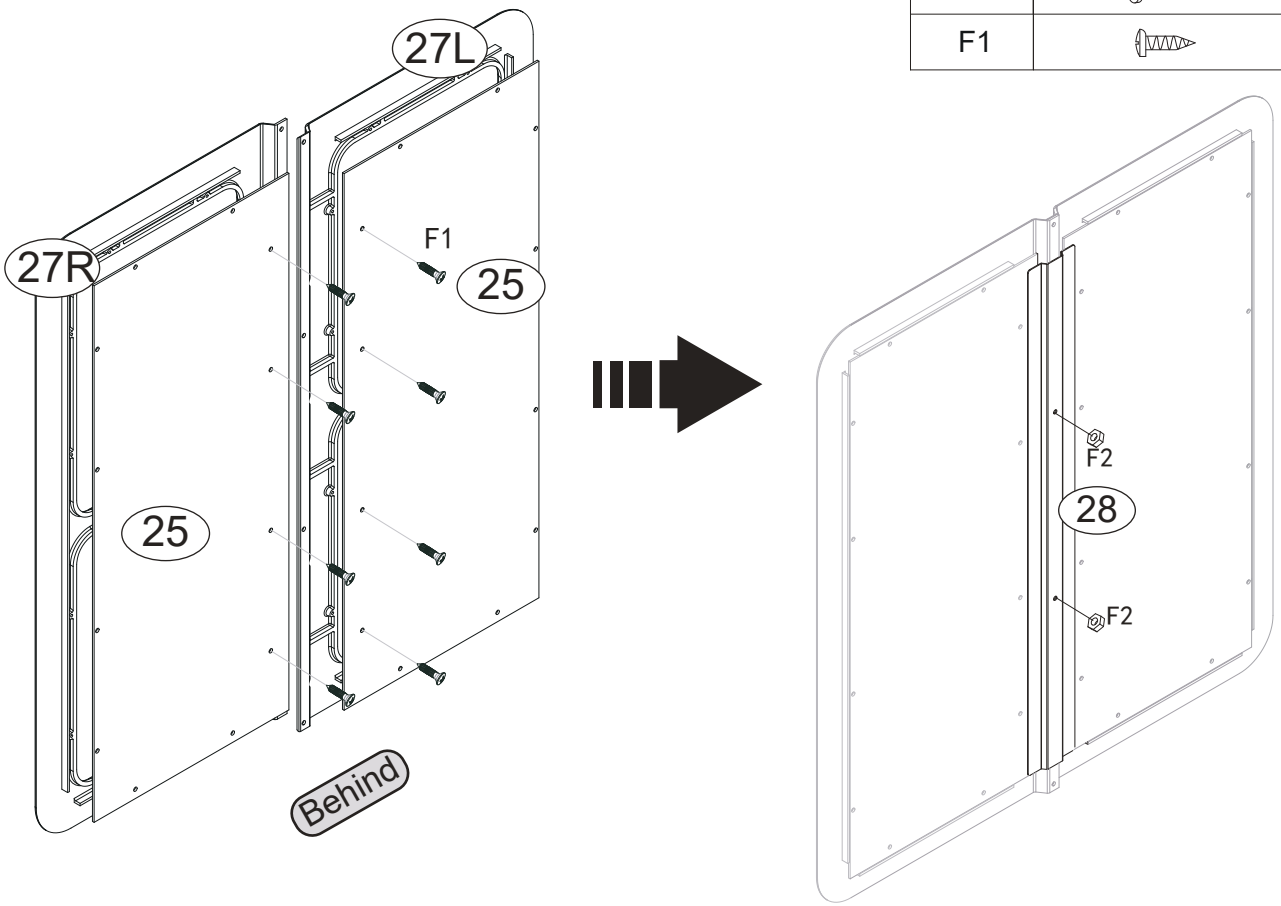

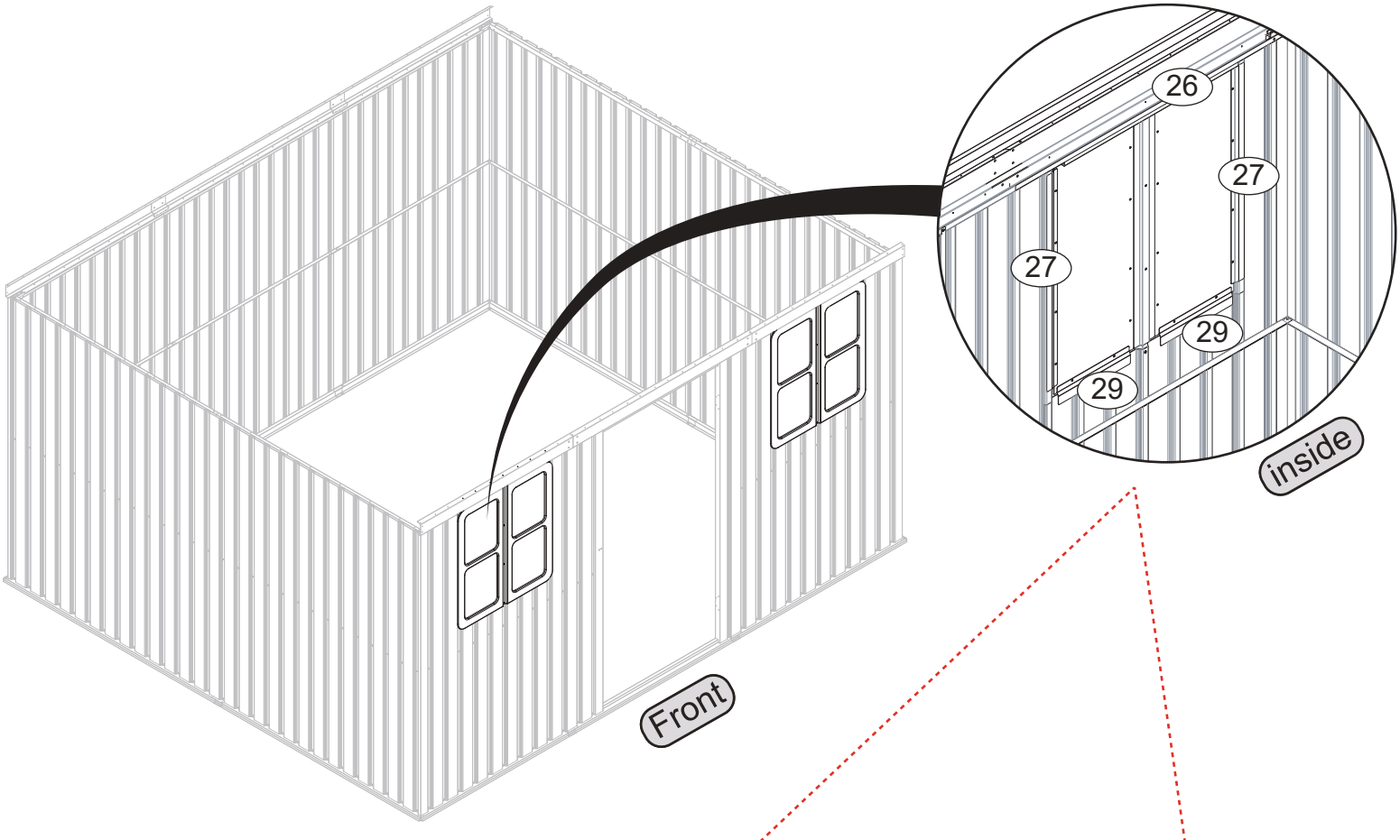

26,27,29 are installed on the upper level of the window panel

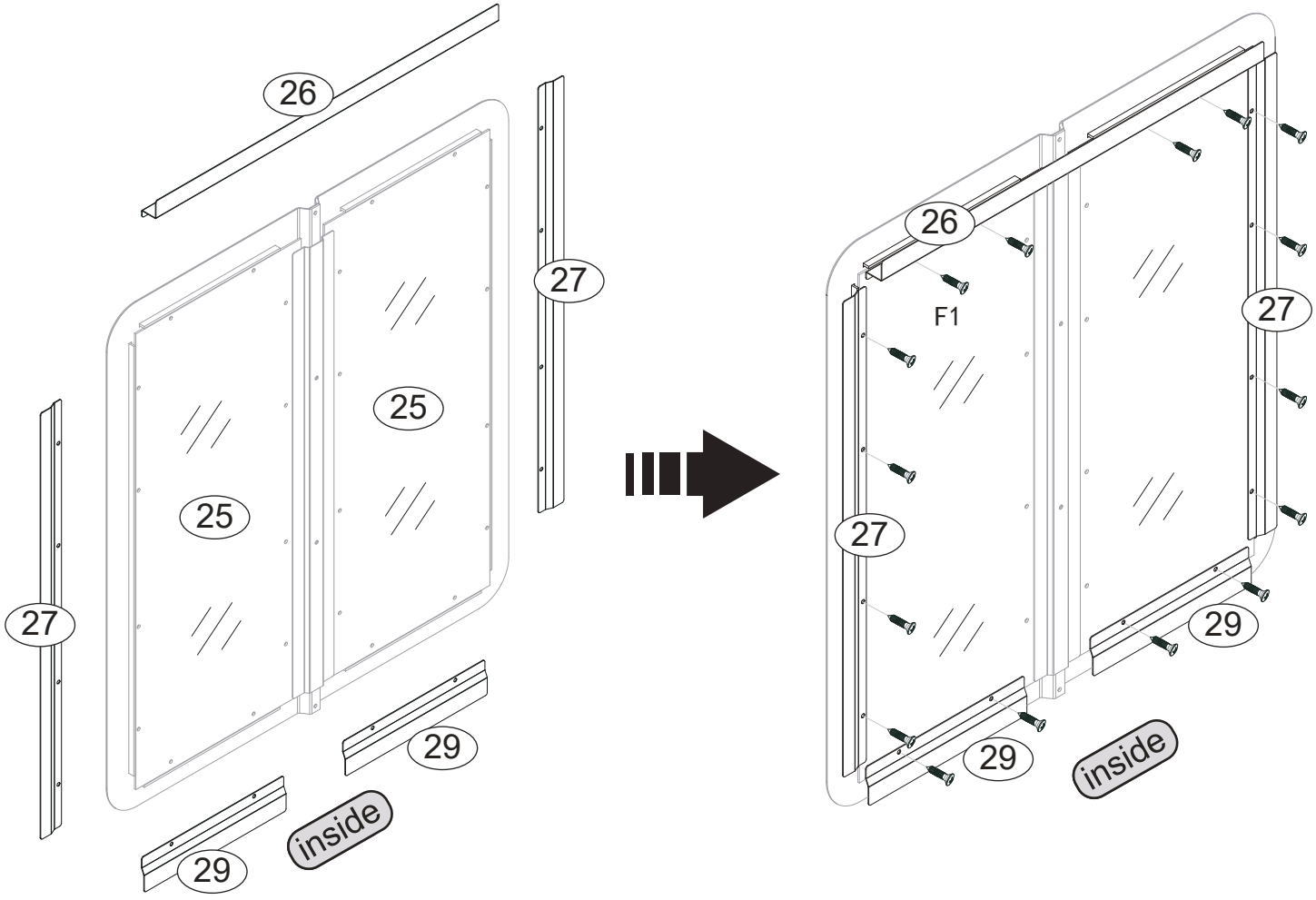

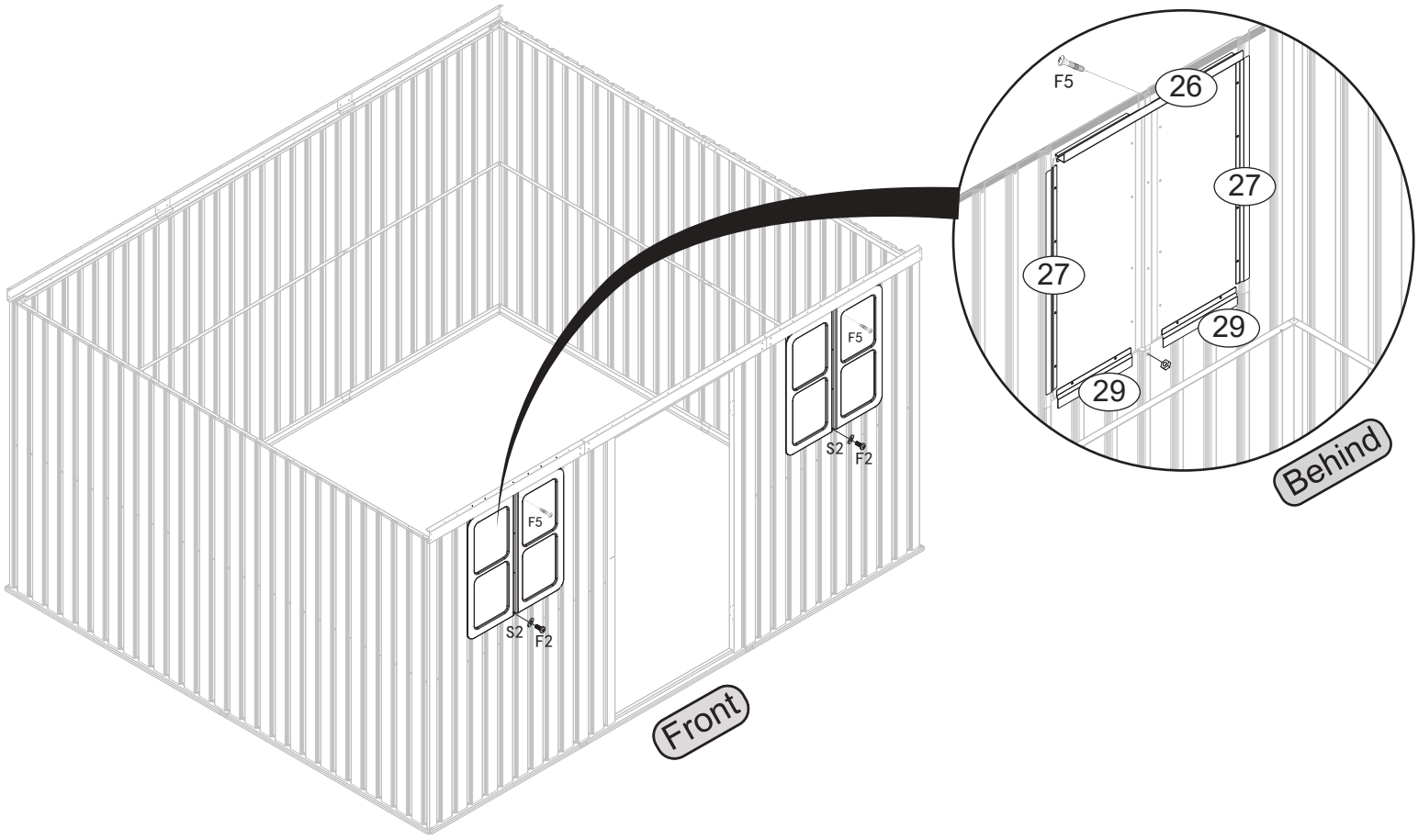

NO.	PART	Qty.
F5	 M4x16	2
F2		2
S2		2

Please prepare these boards,
Put them in order

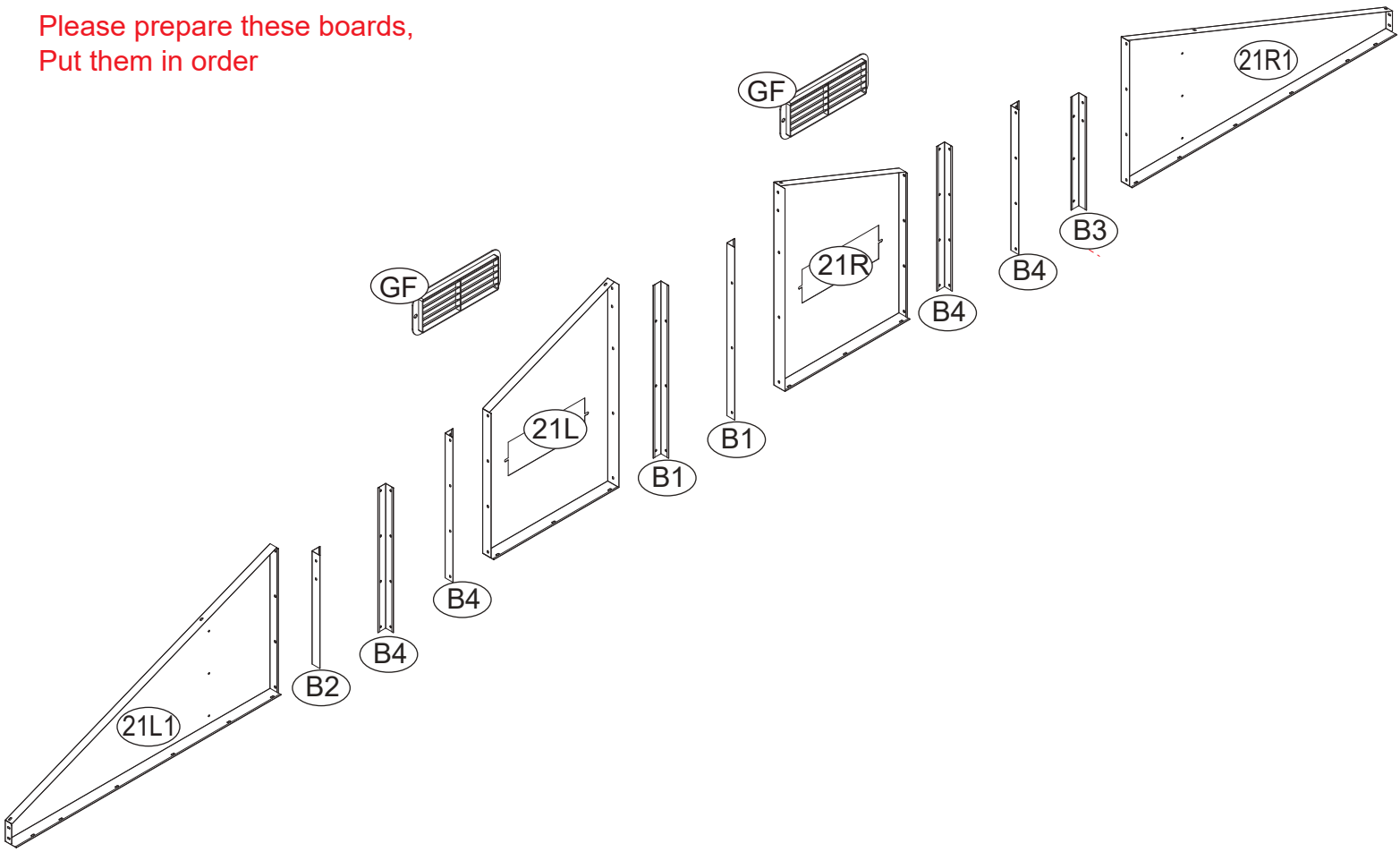

NO.	PART	Qty.
F2		34
S2		10

NO.	PART	Qty.
F1		42
S2		42

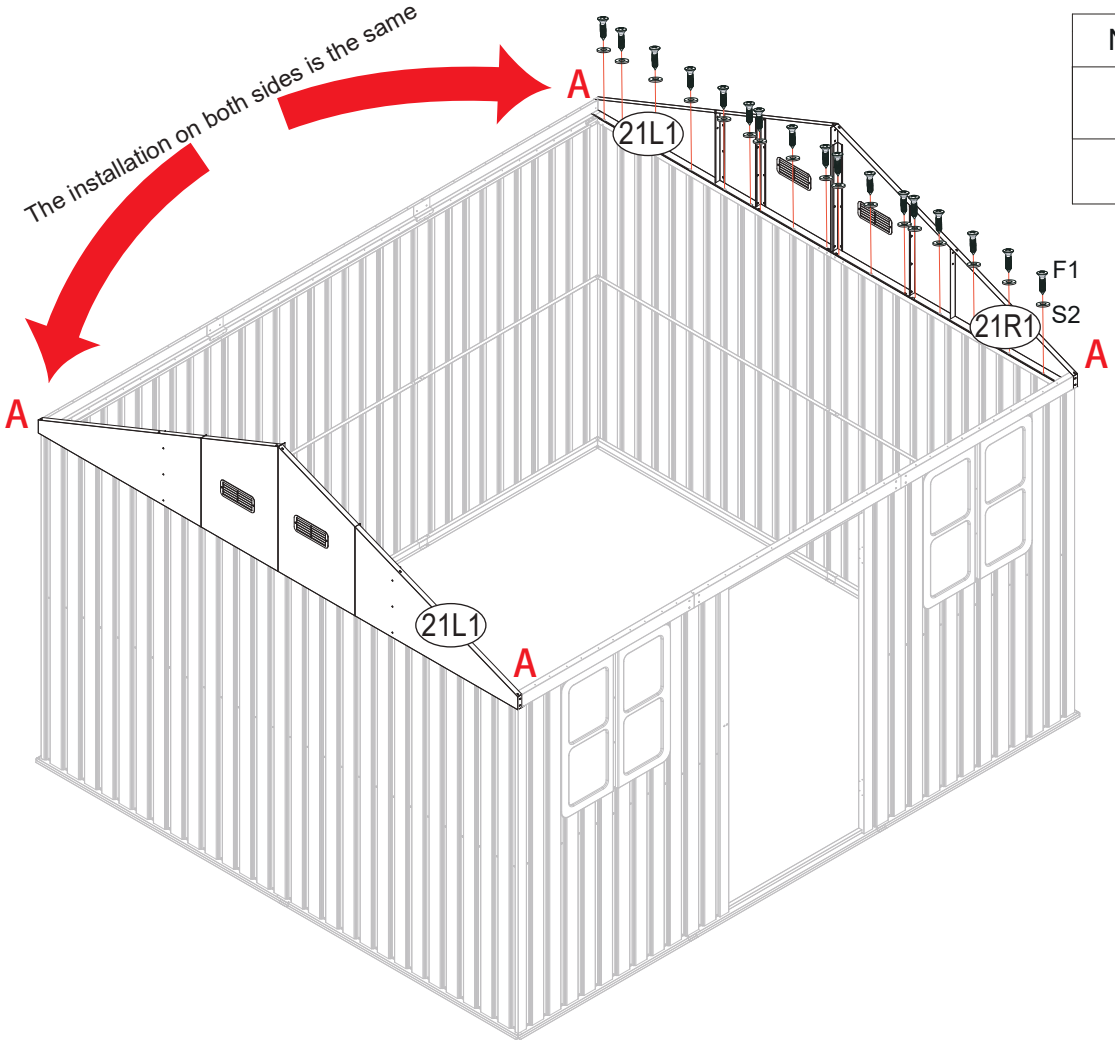

NO.	PART	Qty.
13		2
14		2
13A		2

Note: 14 is pressed into 13

Don't tighten these two screws too tightly

NO.	PART	Qty.
F2		8

x1

Attention! When installing the beam, the two ends of the beam must have holes near the outermost side.

Attention! When installing the beam, the two ends of the beam must have holes near the outermost side.

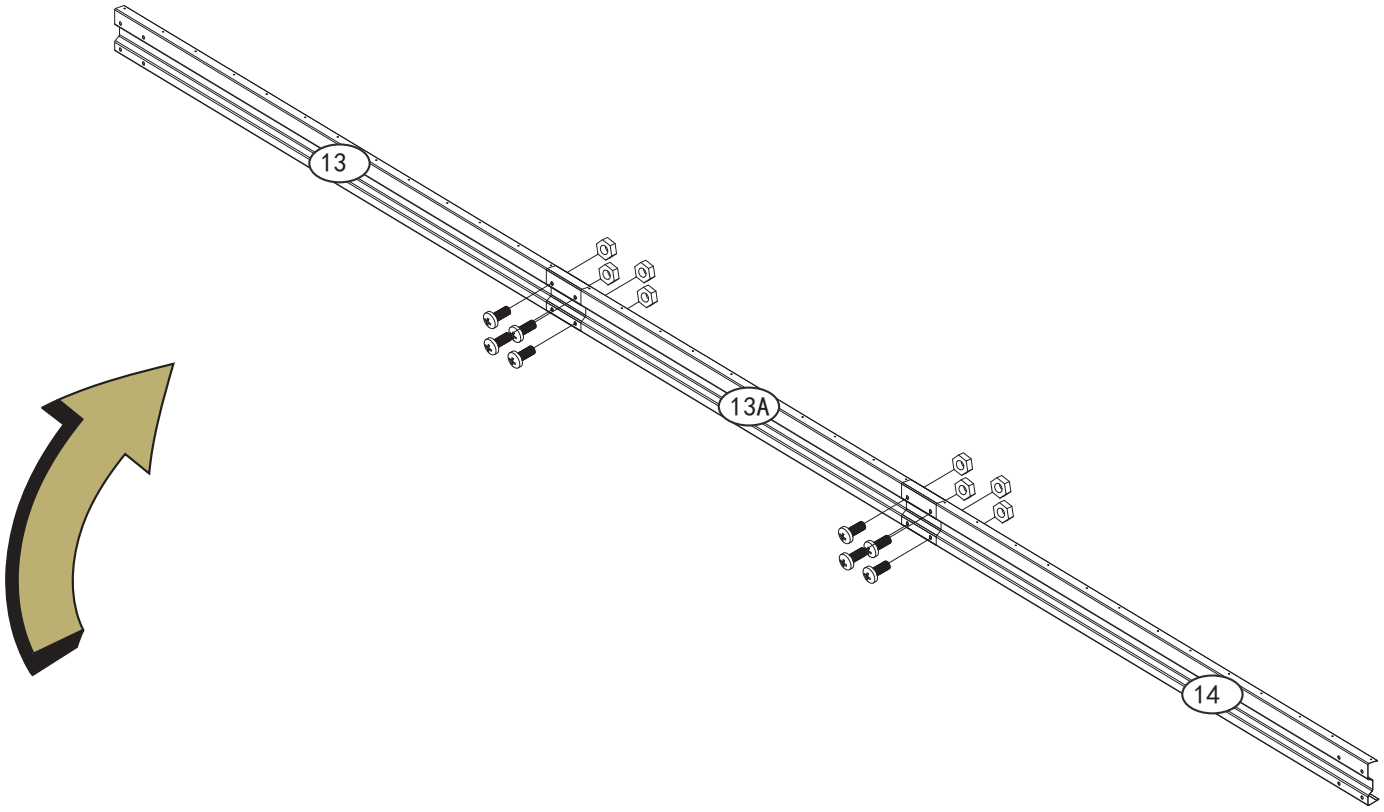

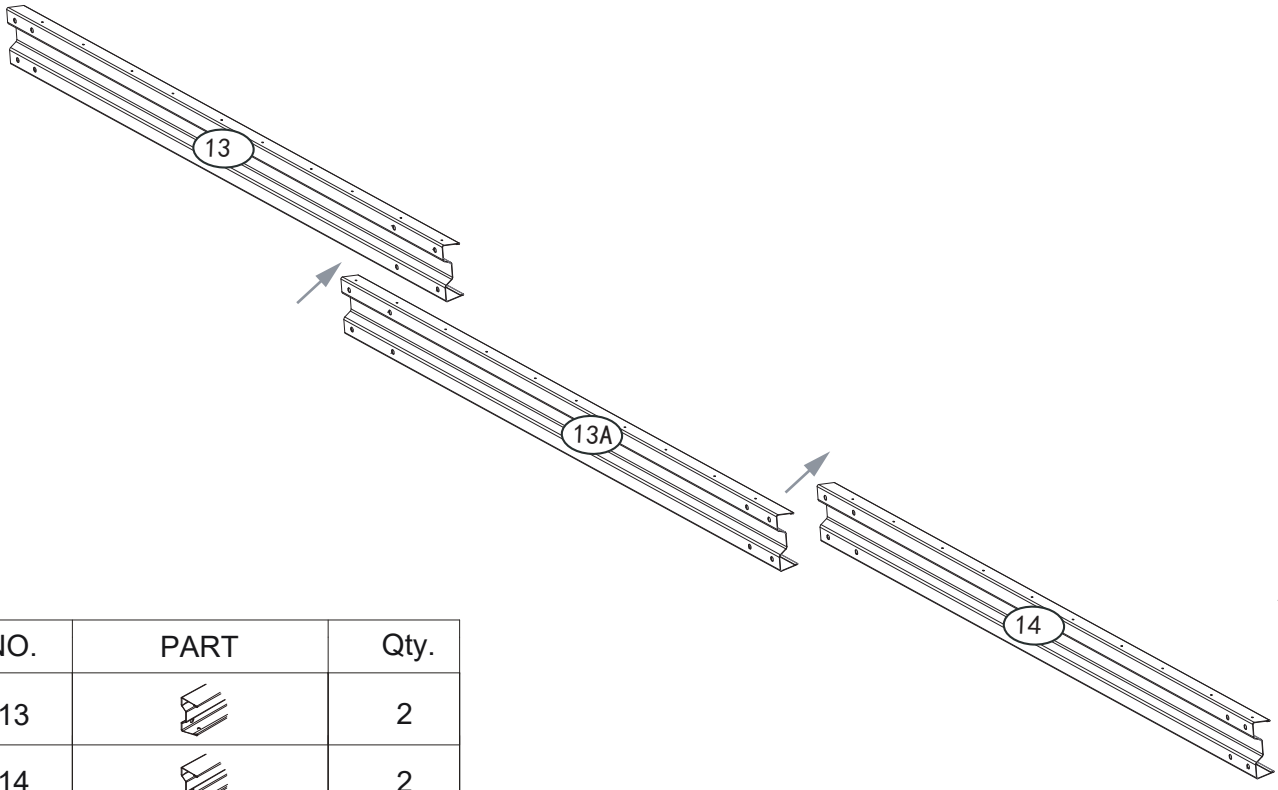

x2

NO.	PART	Qty.
13		2
14		2
13A		2
F2		16

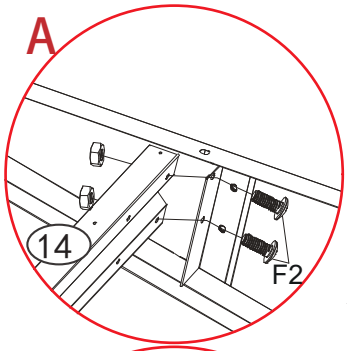

x2

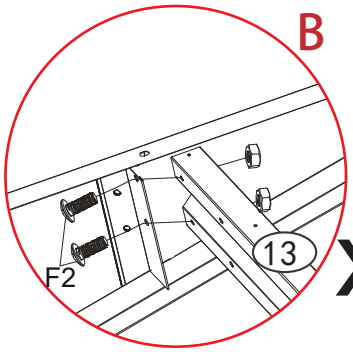

x2

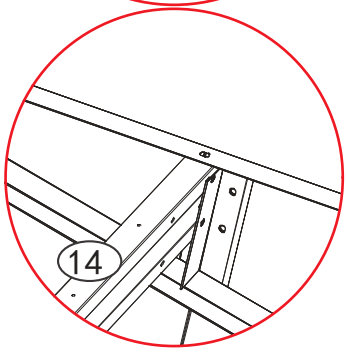

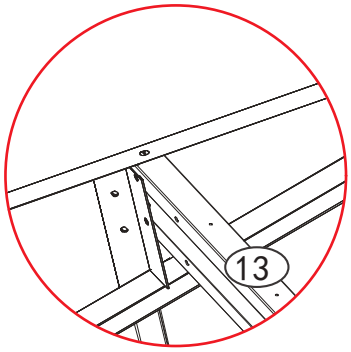

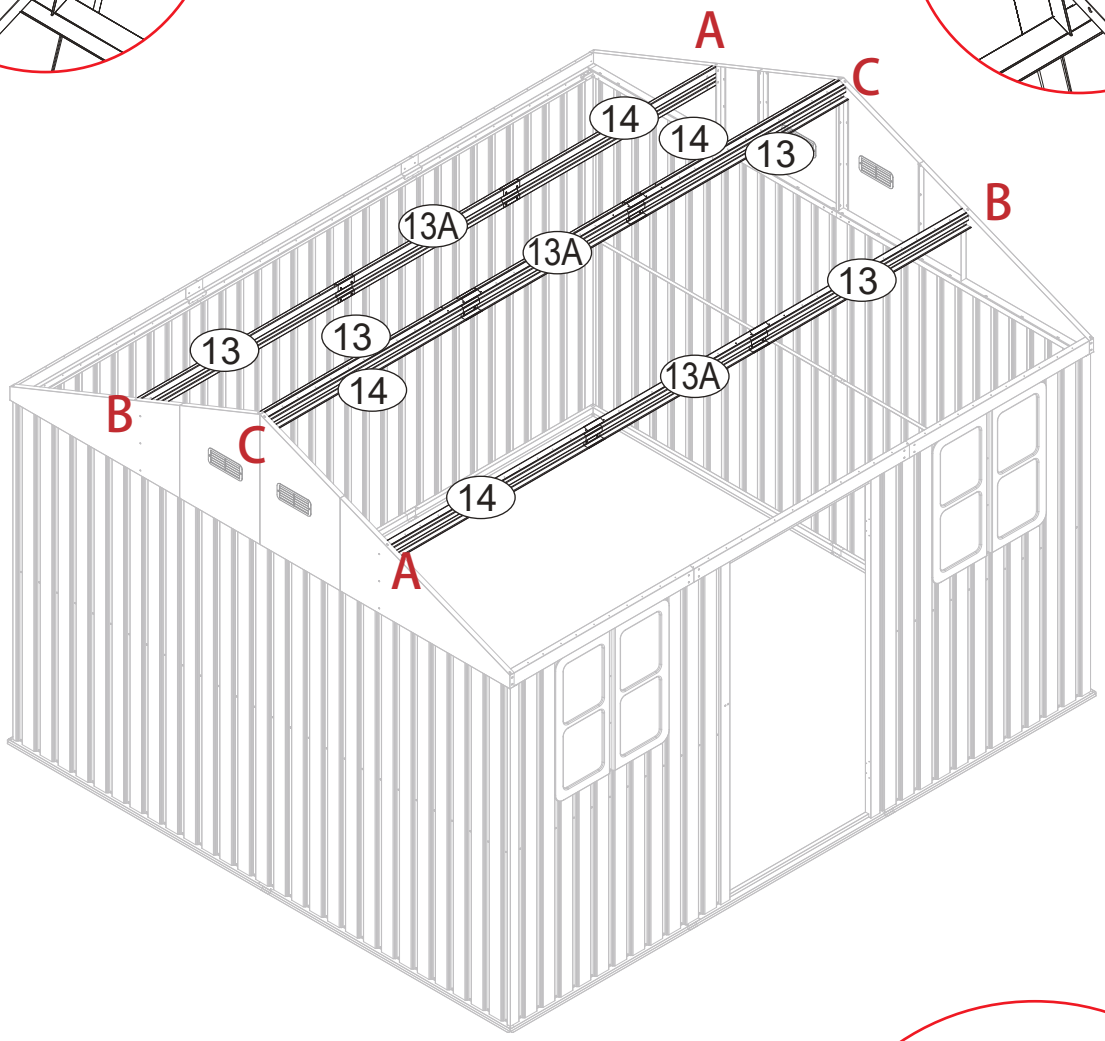

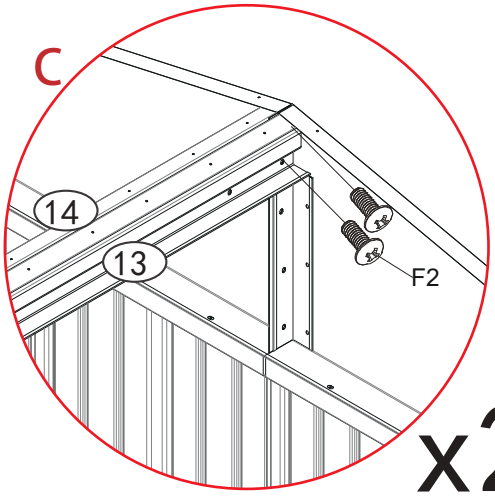

x2

NO.	PART	Qty.
F2		12

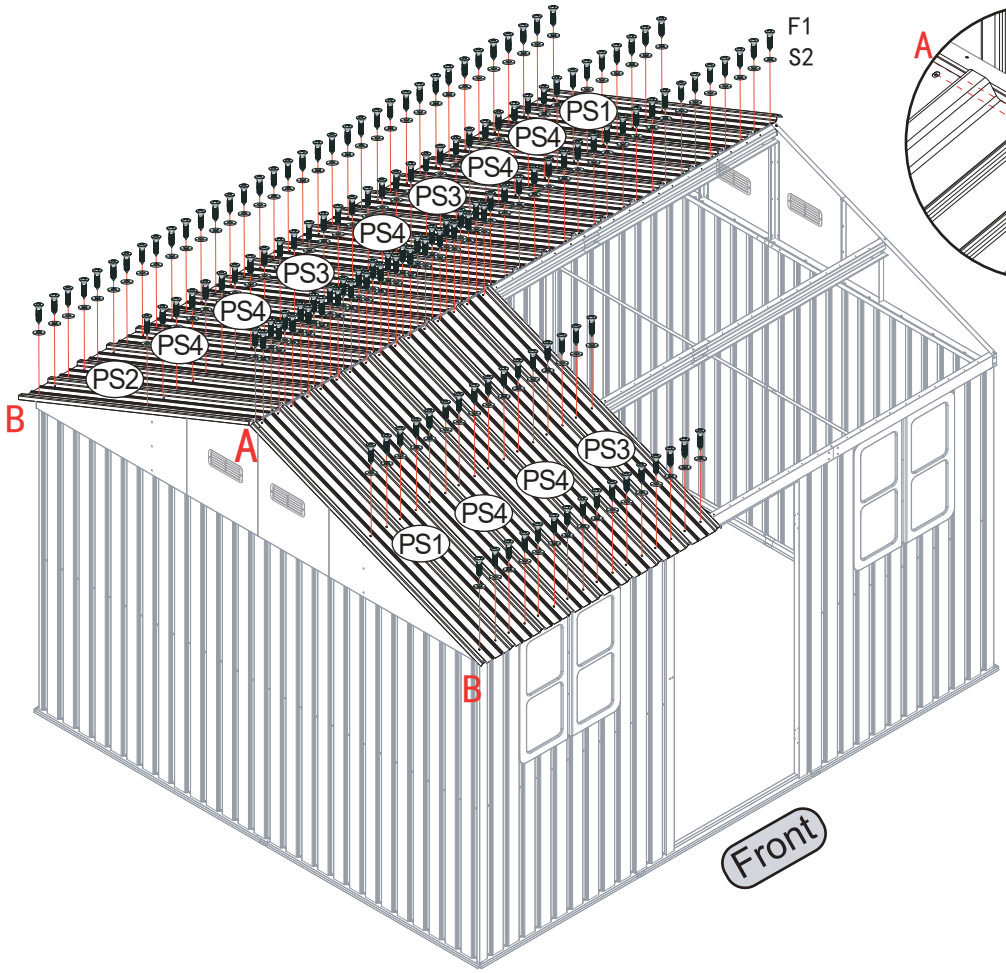

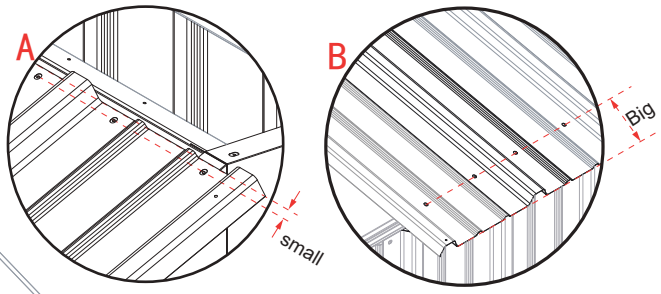

Pay attention to the distance between the upper and lower holes and the ends.

NO.	PART	Qty.
PS1		2
PS2		1
PS3		3
PS4		7
F1		140
S2		140

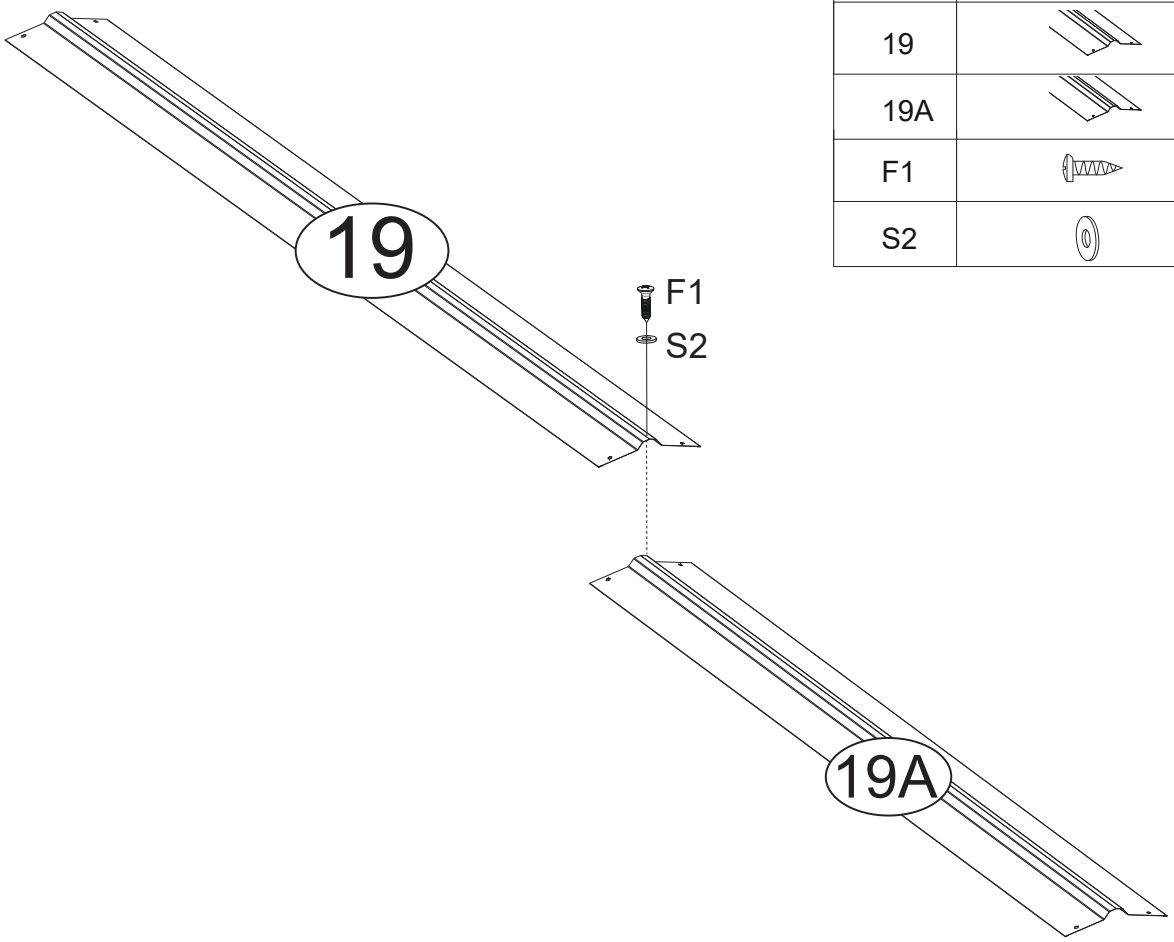

NO.	PART	Qty.
19		1
19A		1
F1		1
S2		1

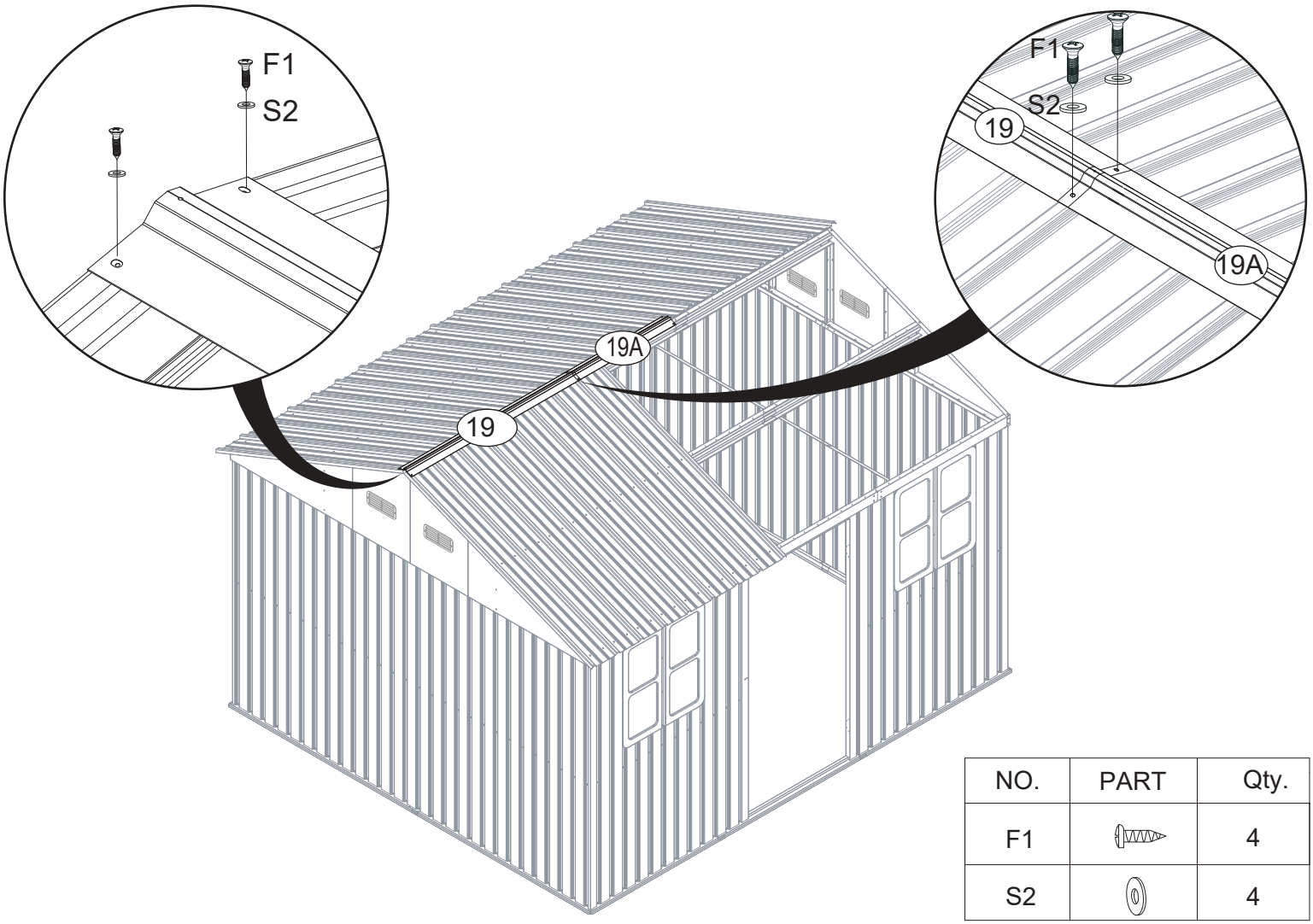

NO.	PART	Qty.
F1		4
S2		4

Lift 19 up and install the screws

NO.	PART	Qty.
PS3	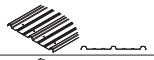	1
PS4	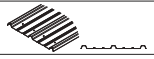	1
F1		24
S2		24

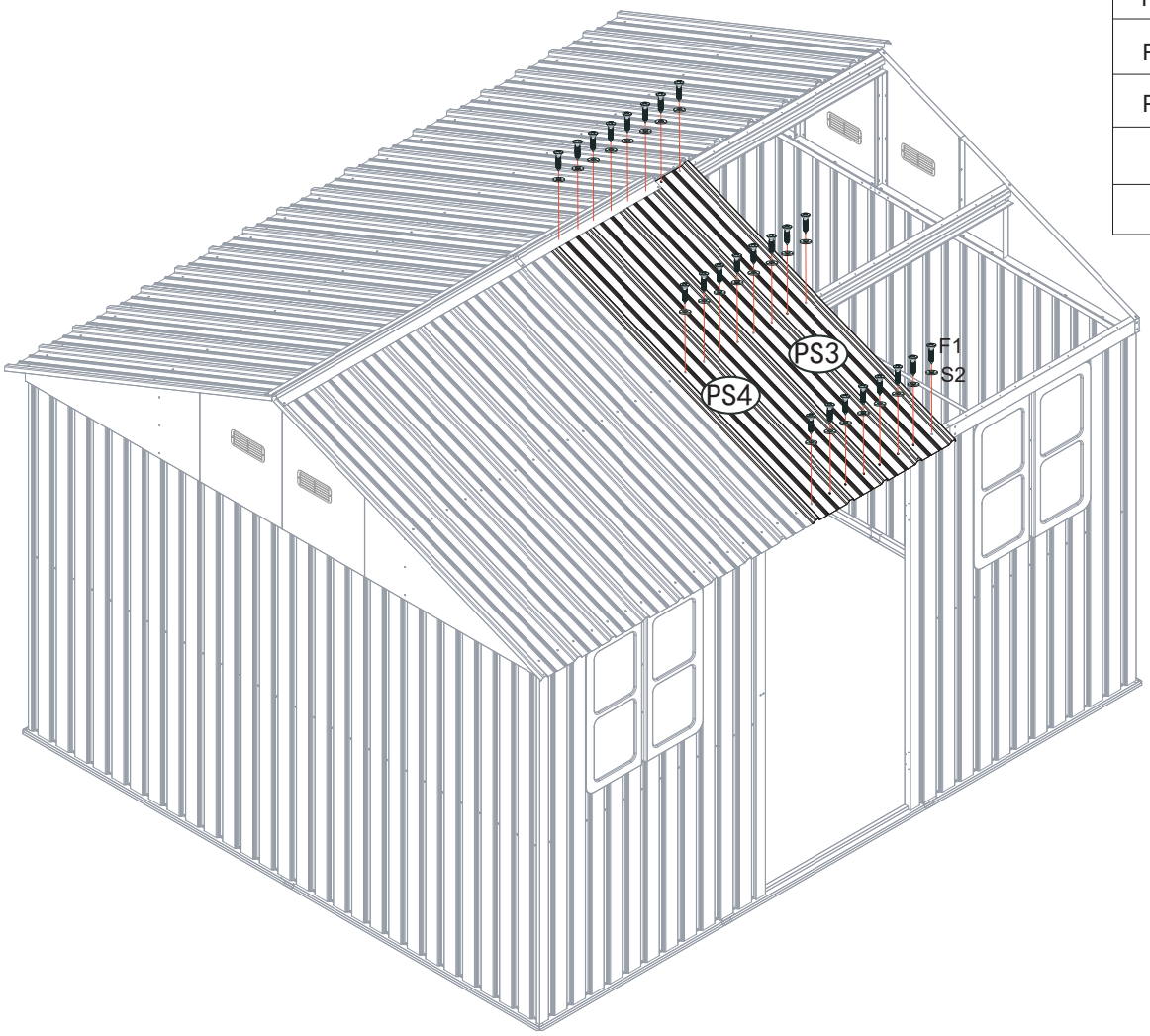

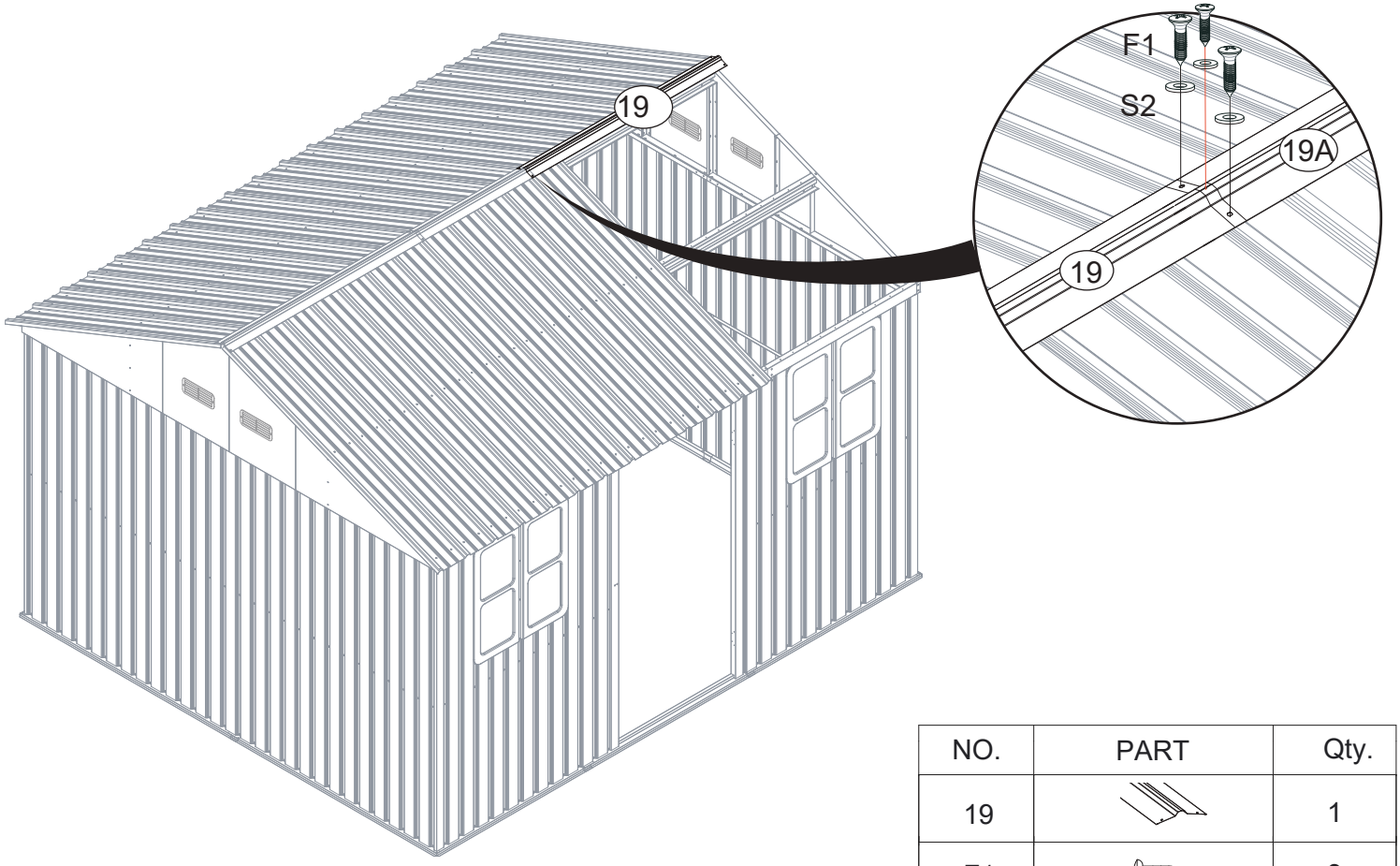

NO.	PART	Qty.
19		1
F1		3
S2		3

Lift 19A up and install the screws

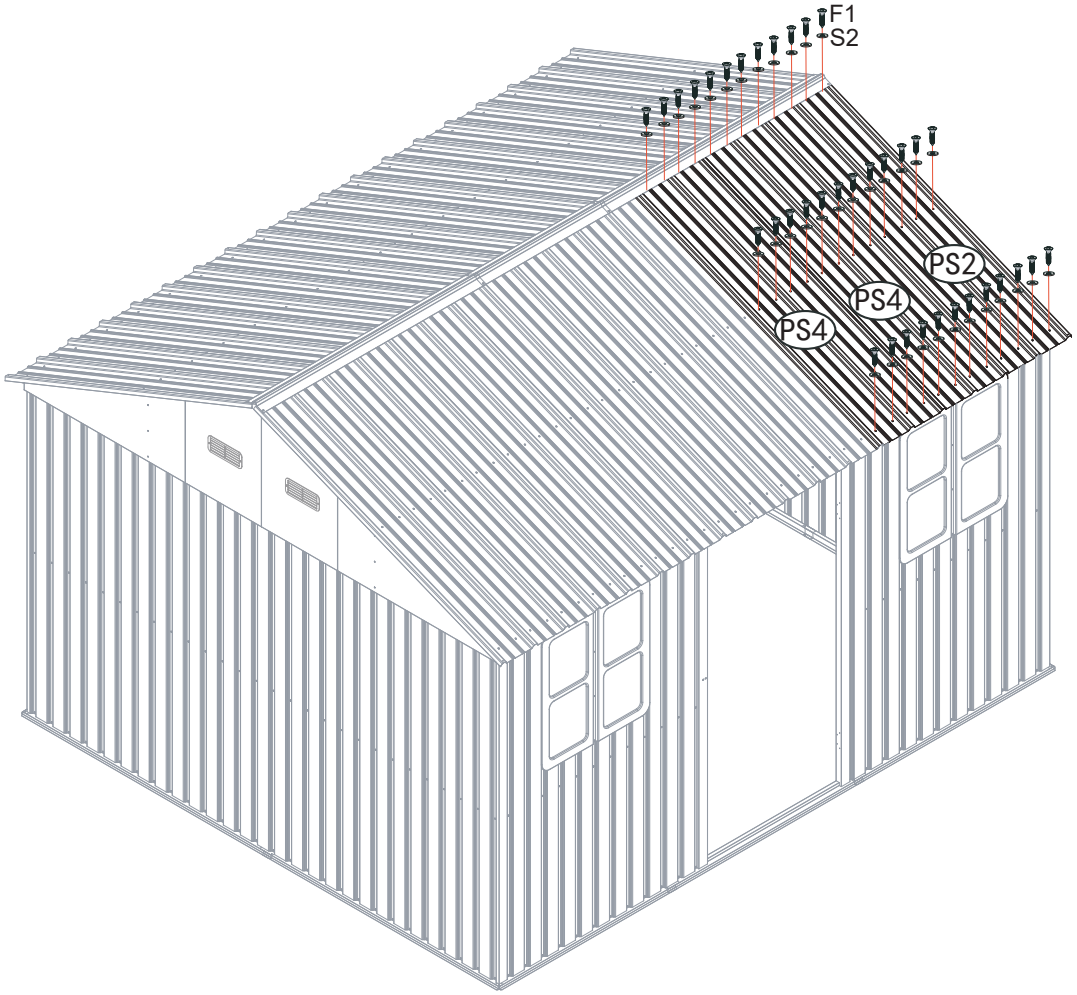

NO.	PART	Qty.
PS2	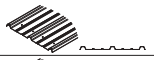	1
PS4	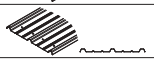	2
F1		36
S2		36

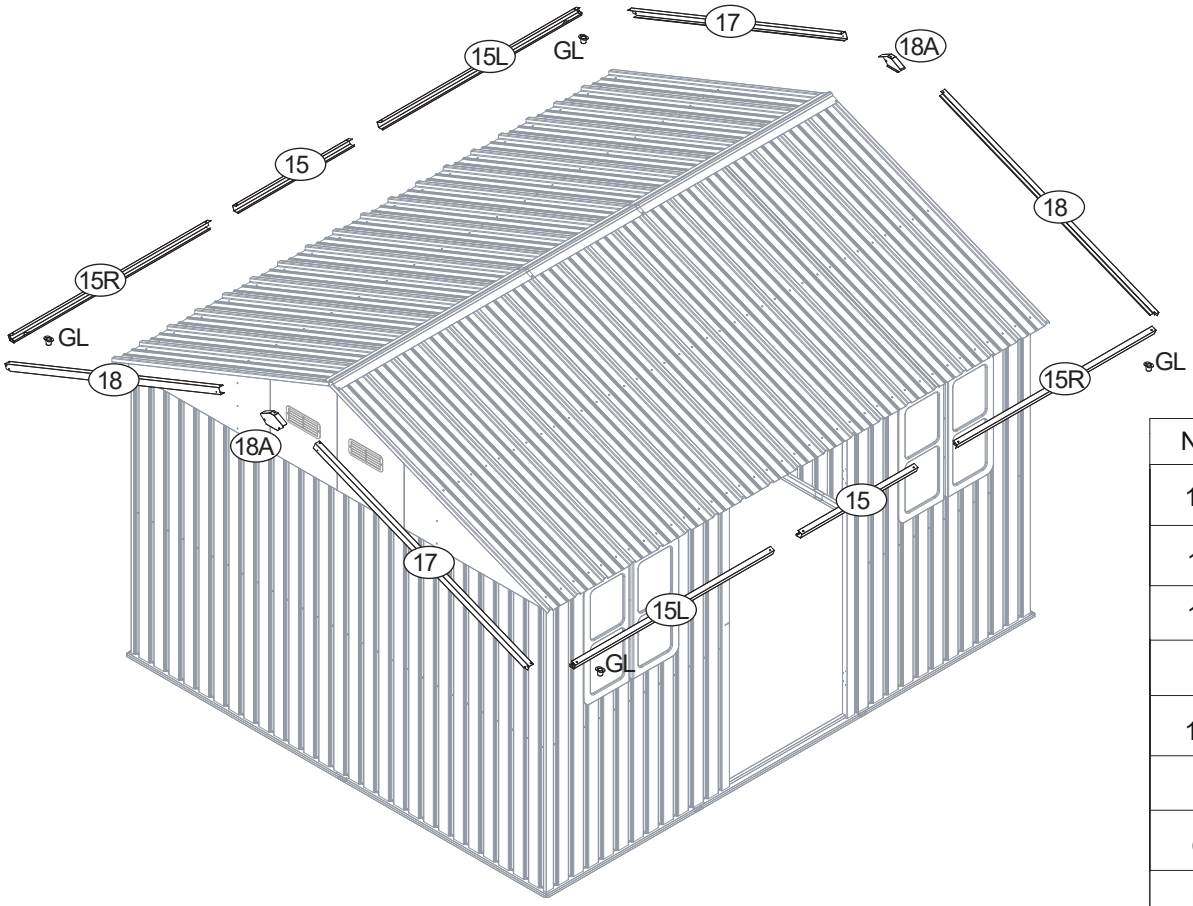

NO.	PART	Qty.
15		2
15L		2
15R		2
17		2
18A		2
18		2
GL		4
F1		34
S2		26

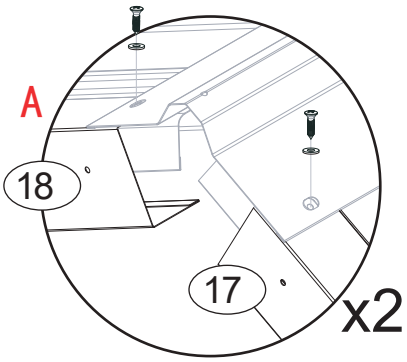

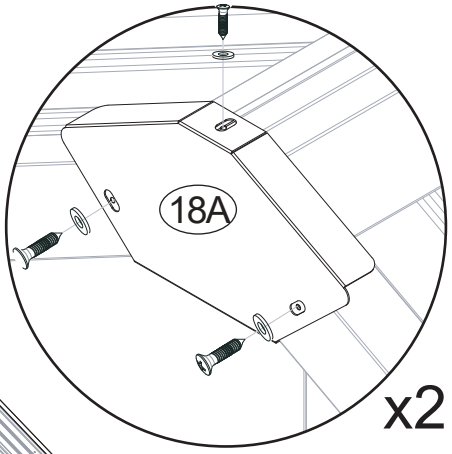

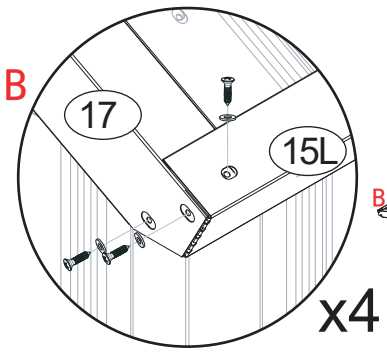

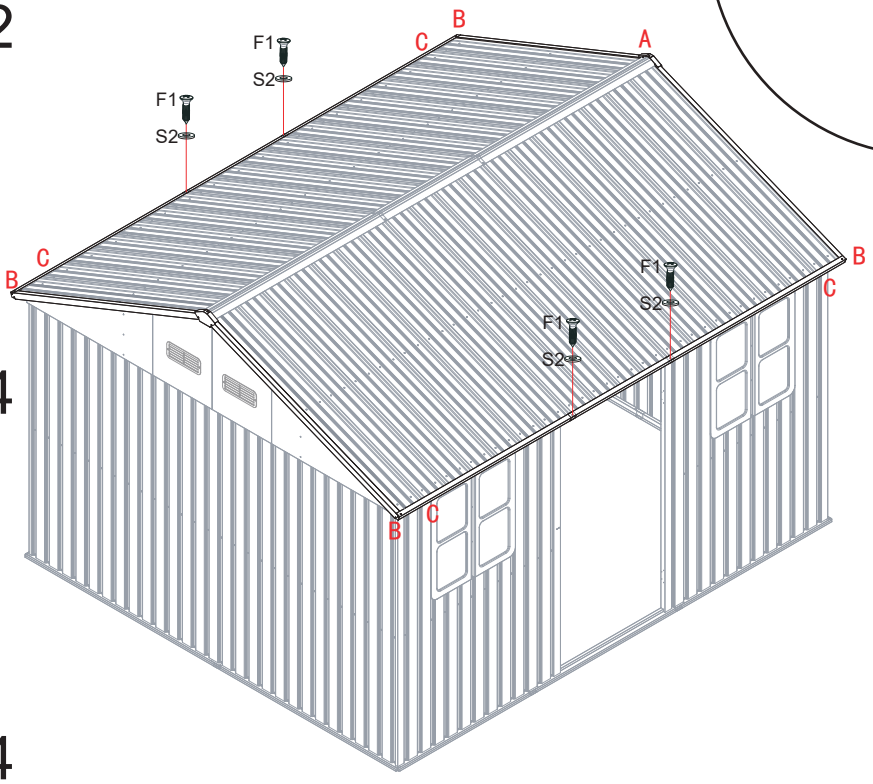

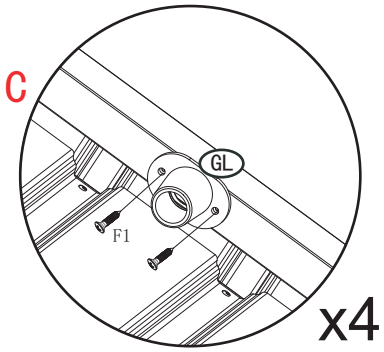

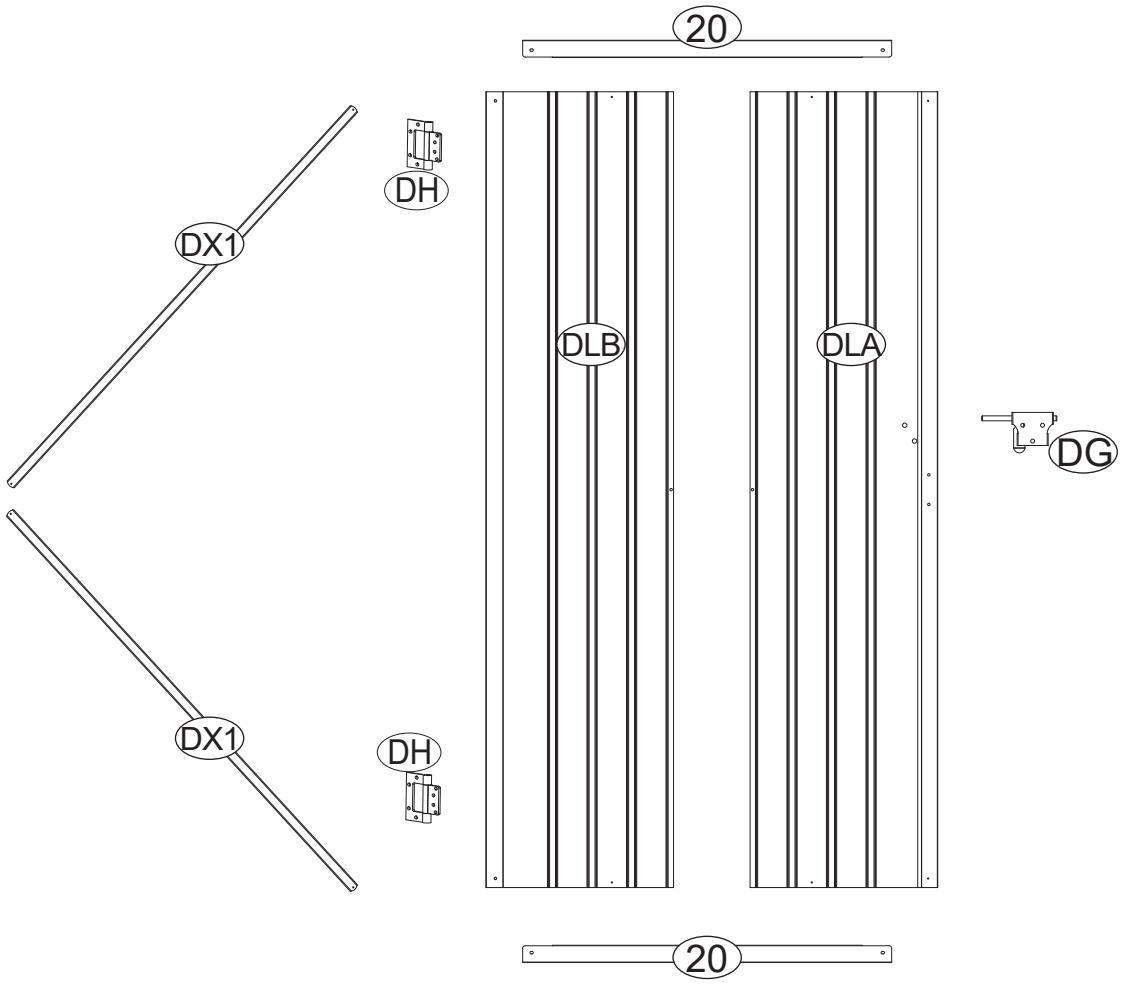

PART	NO.	Qty.
	F2	1
	F4	3
	F1	14
	F3	8
	S2	9

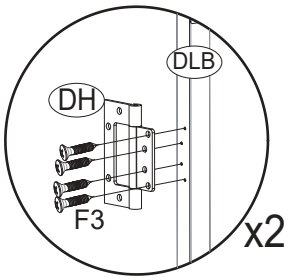

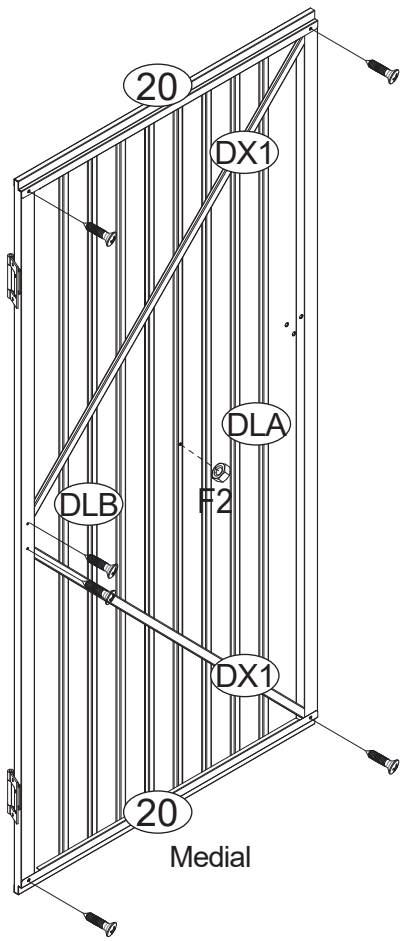

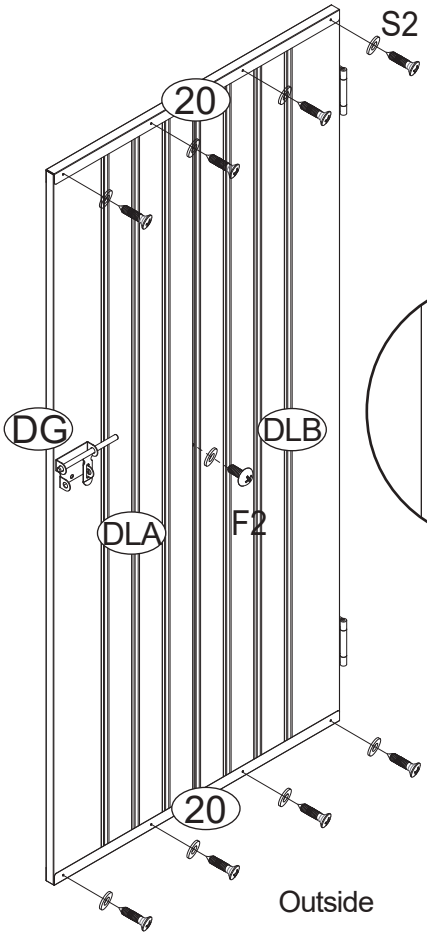

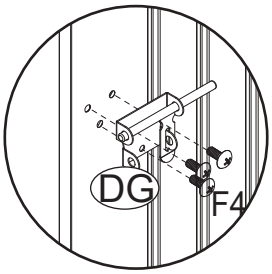

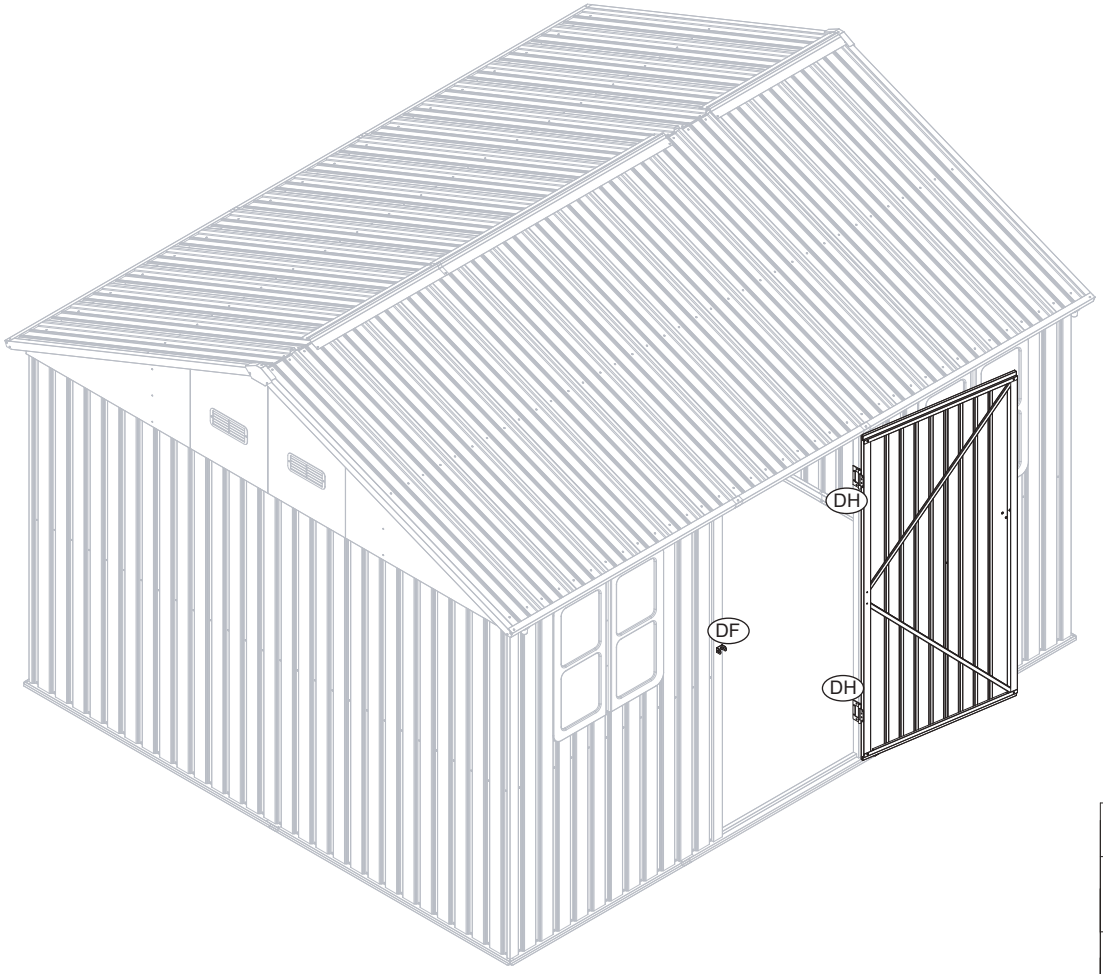

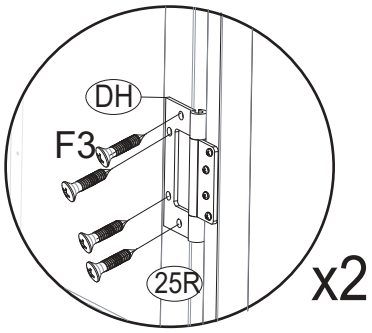

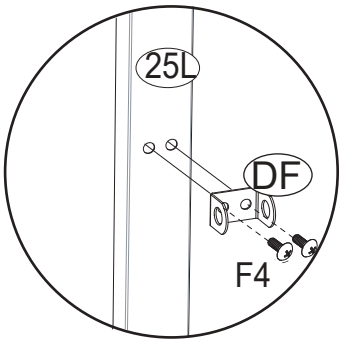

NO.	PART	Qty.
F3		8
DF		1
F4		2

NO.	PART	Qty.
S2		200

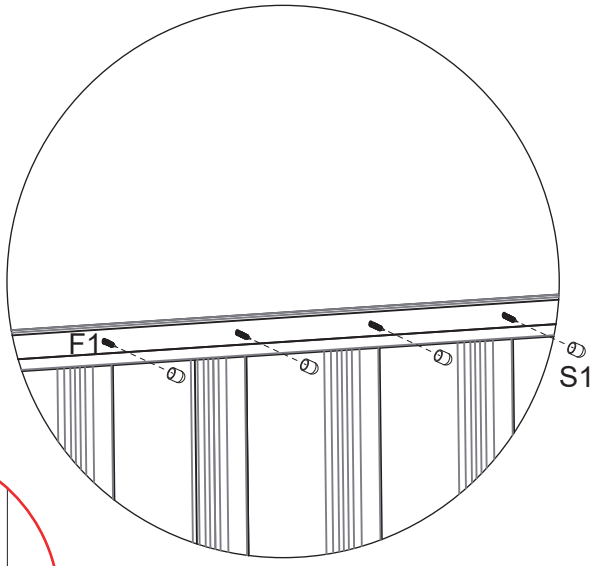

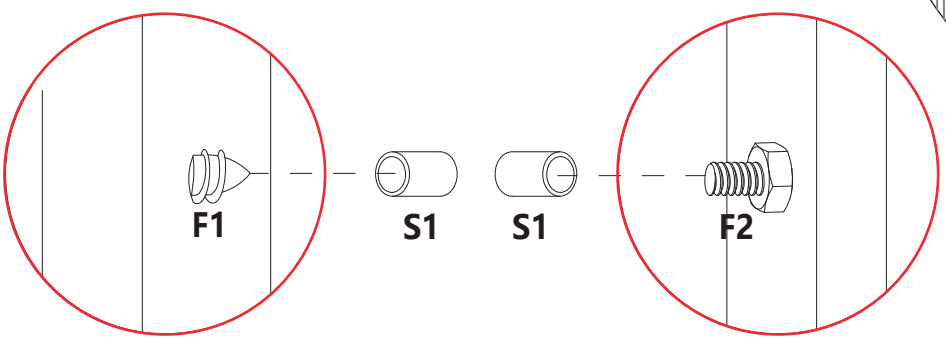

F6 x4

