ASSEMBLY INSTRUCTIONS

ITEM DESCRIPTION : **WRITING DESK**

1

Reverse the Writing desk & place the leg as shown & align the leg to match the apron.

2

Insert the Bolt to fix the leg with the desk top and tighten the nut with the washer as shown in fig1

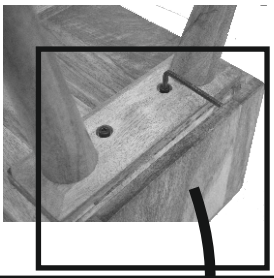

3

Fix the other leg pair in the similar way

4
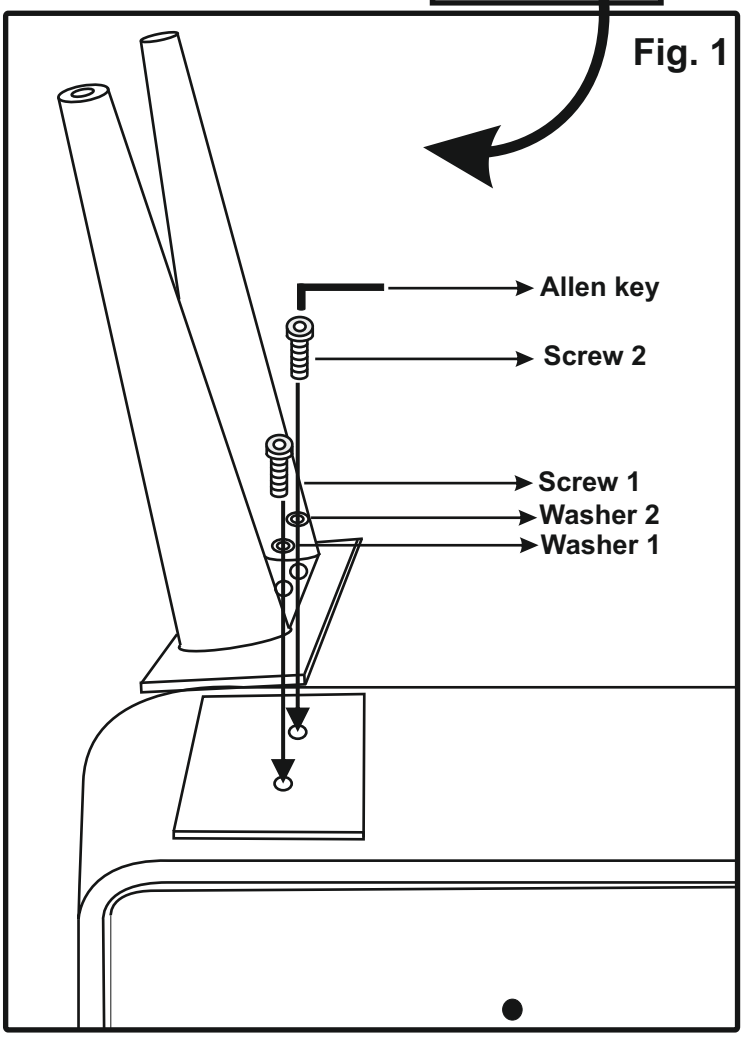
Reverse the desk straight. Now your desk is ready for use.